CITY OF PIEDMONT, OKLAHOMA

CODE OF ORDINANCES

Supplement # 6
Dated December, 2013

Containing all of the ordinances of
the City of Piedmont, Oklahoma,
of a general and permanent nature
through Ordinance No. 594, and
still in effect on December 31, 2013

ORDAINED AND PUBLISHED BY AUTHORITY OF
THE MAYOR AND CITY COUNCIL OF
THE CITY OF PIEDMONT, OKLAHOMA

City of Piedmont, Oklahoma
P. O. Box 240
Piedmont, Oklahoma 73078
Telephone: (405) 373-2621

CITY OF PIEDMONT, OKLAHOMA

CODE OR ORDINANCES

SUPPLEMENT #5
Dated: December, 2010

Containing all of the ordinances of
The City of Piedmont, Oklahoma,
of a general and permanent nature
through Ordinance No. 566 and
still in effect on December 31, 2010

ORDAINED AND PUBLISHED BY AUTHORITY OF
THE MAYOR AND CITY COUNCIL OF
THE CITY OF PIEDMONT, OKLAHOMA

City of Piedmont, Oklahoma
P. O. Box 240
Piedmont, Oklahoma 73078
Telephone: (405) 373-2621

CITY OF PIEDMONT, OKLAHOMA

CODE OF ORDINANCES

Supplement #4
Dated December, 2008

Containing all of the ordinances of
the City of Piedmont, Oklahoma,
of a general and permanent nature
through Ordinance No. 523, and
still in effect on December 31, 2008

ORDAINED AND PUBLISHED BY AUTHORITY OF
THE MAYOR AND CITY COUNCIL OF
THE CITY OF PIEDMONT, OKLAHOMA

City of Piedmont, Oklahoma
P. O. Box 240
Piedmont, Oklahoma 73078
Telephone: (405) 373-2621

CITY OF PIEDMONT, OKLAHOMA

CODE OF ORDINANCES

TABLE OF CONTENTS

CHARTER

PART 1 GENERAL PROVISIONS

Chapter 1 Definitions, interpretations, applicability, fines
Chapter 2 Standard rules; notices, warrants, inspections, fees, bonds
Chapter 3 Corporate and ward limits

PART 2 ADMINISTRATION AND GOVERNMENT

Chapter 1 Government organization
Chapter 2 Retirement and Pensions
A. Social Security
B. Fire Fighter pension and retirement system
C. Police pension and retirement system
Chapter 3 City records
Chapter 4 Personnel regulations

PART 3 ALCOHOLIC BEVERAGES

Chapter 1 Alcoholic beverages
Chapter 2 Low-point beer
Chapter 3 Restrictions on gatherings – minors consuming alcoholic beverages

PART 4 ANIMALS

Chapter 1 General provisions
A. Animal regulations
B. Vaccination
C. Impoundment regulations
D. Cruelty to animals
E. Zoning ordinance
F. Rabies and animal bites
G. Vicious, dangerous, and diseased animals
H. Penalty

Chapter 2 (Reserved)

PART 5 BUILDING REGULATIONS AND CODES

Chapter 1 Licenses and fees; permits, bond, and insurance
A. License fees
B. Permits and inspections
C. Other regulations
Chapter 2 Building code and regulations
A. Building code
B. Moving buildings
Chapter 3 Plumbing code and regulations
A. General provisions
B. Plumbers' registration
Chapter 4 Electric code
A. General provisions
B. Electrical contractors and electricians registration
Chapter 5 Mechanical Code
A. General provisions
B. Registration
Chapter 5A Communications tower
Chapter 6 Fire prevention code
Chapter 7 Mobile home regulations
Chapter 8 Power generation towers and wind generators

PART 6 COURT

Chapter 1 Court procedure
Chapter 2 Judge
Chapter 3 Jury trial
Chapter 4 Proceeding against corporations
Chapter 5 Juvenile offenders

PART 7 FINANCE AND TAXATION

Chapter 1 Finances generally
Chapter 2 Purchases by City
Chapter 3 Sales tax
Chapter 4 Use tax
Chapter 5 911 emergency service fee
Chapter 6 Telephone exchange fee
Chapter 7 Utility tax
Chapter 8 Unclaimed surplus property

PART 8 HEALTH AND NUISANCES

Chapter 1 Nuisances and health generally
Chapter 2 Weeds, grass and trash
Chapter 3 Dilapidates buildings
Chapter 4 Abandoned junk vehicles
Chapter 5 Food and milk regulations
A. Food service sanitation
B. Milk and milk products
Chapter 6 Rules for storage and parking of commercial vehicles, recreational vehicles and trailers declaring a nuisance for parking in violation of this
Chapter 7 Regulation of sound

PART 9 LICENSE AND BUSINESS REGULATIONS

Chapter 1 General provisions
Chapter 2 Itinerant vendors

PART 10 OFFENSES AND CRIMES

Chapter 1 General provisions
Chapter 2 Offenses against persons
Chapter 3 Offenses against property
Chapter 4 Offenses against public peace
Chapter 5 Offenses against the public
Chapter 6 Offenses against public authority
Chapter 7 Weapons and firearms

PART 11 PARKS, RECREATION, CIVIC CENTER, AND LIBRARY

Chapter 1 Parks and recreation
Chapter 1A Parks and Recreation Board
Chapter 2 Civic Center
Chapter 3 Library

PART 12 PLANNING, ZONING AND DEVELOPMENT

Chapter 1 Board and commissions
A. Planning commission
B. Board of Adjustment
Chapter 2 Zoning regulations
Chapter 3 Zoning regulations
Chapter 4 Subdivision regulations

Chapter 5 Oil and gas regulations
Chapter 6 Flood damage and prevention

PART 13 PUBLIC SAFETY

Chapter 1 Fire services
A. Fire department
B. Calls outside limits
Chapter 2 Police services
Chapter 3 Emergency management
Chapter 4 Alarm systems

PART 14 STREETS AND SIDEWALKS

Chapter 1 General provisions
Chapter 2 Curb and street cuts
A. Street cuts
B. Curb cuts
Chapter 3 Street construction standards
Chapter 4 Revocable parking permits
Chapter 5 Sidewalks

PART 15 TRAFFIC AND VEHICLES

Chapter 1 General provisions
Chapter 2 Traffic-control devises
Chapter 3 Equipment
Chapter 4 Certain vehicles prohibited
Chapter 5 Driving, overtaking, and passing
Chapter 6 Stopping, standing, and parking
A. Parking regulations
B. Manner of parking
Chapter 7 Speed regulations
Chapter 8 Right-of-way
Chapter 9 Turning movements
Chapter 10 One-way streets and alleys
Chapter 11 Truck routes and parking
Chapter 12 Loading zones
Chapter 13 Public carrier stops
Chapter 14 Accidents
Chapter 15 Motorcycles
Chapter 16 Bicycles
Chapter 17 Pedestrians

Chapter 18 Enforcement
Chapter 19 Impoundment
Chapter 20 Penalties and arrest procedure

PART 16 TRANSPORTATION

(Reserved)

PART 17 UTILITIES

Chapter 1 General provisions
A. Lease of systems
B. Water shortage
C. Water and sanitary sewer extension and payback policy
Chapter 2 Refuse collection services
Chapter 3 Storm sewer use fee

PART 17A SEWERS AND SEWAGE DISPOSAL

Article I General
Article II Administrative enforcement remedies
Article III Judicial enforcement remedies
Article IV Supplemental Enforcement Action
Article V Affirmative defenses to discharge violations
Article VI Connections to public sewers
Article VII Industrial or harmful discharges
Article VIII Rates, charges, billing and collection procedures
Article IX Sewers outside city
Article X Septic tanks
Article XI Individual aerobic wastewater system
Article XII Pretreatment facility service and wastewater transporting and disposal

PART 18 EARTH CHANGE AND STORM WATER DRAINAGE

Article I General
Division 2 Administrative procedure
Article II Drainage and sedimentation policies and standards
Article III Drainage plans and studies
Article IV Earth change permit

See also City of Piedmont Municipal Authority rules and regulations

APPENDICES

1. Schedule of fees and charges
2. Schedule of bonds and insurance
3. Electric franchise
4. Gas franchise
5. Piedmont Municipal Authority
6. Cable television (reserved)
7. Provisions of selected State Statutes applicable to City
8. Appendix of ordinances not in code
9. Disposition Table
10. General ordinances not codified

FOREWORD

This code of ordinances is provided by the Oklahoma Municipal League as a part of its service program for cities and towns in Oklahoma. Technical staff assistance has been provided by Kennedy and Associates, of Oklahoma City, which was responsible for the organization, codification, and indexing of this code.

This codification provides a complete revision and codification of all ordinances of a general and permanent nature of the City of Piedmont. All obsolete, illegal or superseded ordinances have been repealed as a part of the codification. All amended ordinances are brought up to date. The code also includes certain new ordinances that were prepared to fill in gaps not covered by existing ordinances.

The code includes several features that will facilitate its use. The various chapters and articles of the code follow one another in a natural, logical order. The table of contents with a complete outline of this order will often provide sufficient reference points for the reader. The reader may consult the alphabetical index at the end of the volume. At the beginning of each chapter and article there is a section-by-section analysis of the articles and sections within the chapter.

Non-textual provisions such as severability clauses, repeals, and enacting clauses are omitted from the text but are covered in Part One of the code that applies to the entire code. In most instances, references to "this ordinance" in the text of an ordinance have been changed to "this chapter" or "article" as deemed appropriate. Various editorial notes, state law references, and amendment notes have been included throughout the code to clarify its provisions.

The citations included at the end of sections apply to the original source and approval date of ordinances. Sections of the code which do not have a citation represent new ordinances that have been added to fill in gaps or to replace ordinances which have become outdated.

The new code is published in loose leaf form so that all new ordinances may be printed for inclusion therein on a regular basis. The Oklahoma Municipal League has available a periodic updating service. Such service can be secured through an agreement between the municipality and the League under which the city clerk would send new ordinances, and amendments to ordinances, and the League would provide new and replacement pages for the code.

We gratefully acknowledge the cooperation and assistance rendered by the city officials in the preparation of this code.

William A. Moyer
Executive Director
Oklahoma Municipal League

ORDINANCE NO. 328

AN ORDINANCE ADOPTING AND ENACTING A CODE OF ORDINANCES OF THE CITY OF PIEDMONT, OKLAHOMA: PROVIDING FOR THE REPEAL OF CERTAIN ORDINANCES NOT INCLUDED THEREIN, EXCEPT AS HEREAFTER PROVIDED; PROVIDING FOR NEW OR REVISED AND CONTINUING PROVISIONS AND REGULATIONS ON

1. GENERAL PROVISIONS
2. ADMINISTRATION AND GOVERNMENT
3. ALCOHOLIC BEVERAGES
4. ANIMALS
5. BUILDINGS REGULATIONS AND CODES
6. COURT
7. FINANCE AND TAXATION
8. HEALTH AND NUISANCES
9. LICENSING AND BUSINESS REGULATIONS
10. OFFENSES AND CRIMES
11. PARKS, RECREATION AND CEMETERY
12. PLANNING, ZONING AND DEVELOPMENT
13. PUBLIC SAFETY
14. STREETS AND SIDEWALKS
15. TRAFFIC AND VEHICLES
16. TRANSPORTATION
17. UTILITIES

PROVIDING WHEN THIS ORDINANCE SHALL BECOME EFFECTIVE; PROVIDING FOR SALE AND COPIES IN THE CLERK'S OFFICE; PROVIDING FOR SUPPLEMENTS OR CHANGES TO CODE; AND DECLARING AN EMERGENCY.

BE IT ORDAINED BY THE CITY COUNCIL OF THE CITY OF PIEDMONT, OKLAHOMA:

SECTION 1 SUMMARY.

This ordinance adopts and enacts a Code of Ordinances of the City of Piedmont, Oklahoma; provides for the repeal of certain ordinances not included therein, except as hereafter provided; provides for new or revised and continuing provisions and regulations on: General Provisions; Administration and Government; Alcoholic Beverages; Animals; Building Regulations and Codes; Court; Finance and Taxation; Health and Nuisances; Licensing and Business Regulations; Offenses and Crimes; Parks, Recreation and Cemetery; Planing, Zoning and Development; Public Safety; Streets and Sidewalks; Traffic and Vehicles; Transportation; and Utilities; provides when this Ordinance becomes effective; provides for sale and copies in the Clerk's office; provides for supplements or changes to the Code; providing an effective date; and declaring an emergency.

SECTION 2 TITLE.

A code and revision of the ordinances of the City of Piedmont, is hereby adopted as the "City Code of Piedmont, Oklahoma," or by any other properly identifying designation.

SECTION 3 CODE SUPERSEDES OTHER ORDINANCES.

This code shall be treated and considered as a new and comprehensive ordinance of the city which shall supersede all other general and permanent ordinances enacted by the council prior to April 1, 1994, except such as by reference thereto are expressly saved from repeal or continued in force and effect for any purpose.

SECTION 4 EFFECTIVE DATE OF CODE, REPEAL.

All provisions of this code shall be in full force and effect from the date this ordinance becomes law. All ordinances of a general and permanent nature of the city in effect on or before April 1, 1994, and not in the code or recognized and continued in force by reference herein and which are in conflict herewith, are hereby repealed from and after the effective date of this ordinance, except as hereinafter provided.

SECTION 5 ORDINANCES NOT REPEALED.

The repeal provided for in Section 4 hereof shall not affect any ordinance adopted after April 1, 1994, and before the effective date of this code; nor shall the repeal affect any offense or act committed or done or any penalty or forfeiture incurred or any contract or right established or accruing before the effective date of this ordinance; nor shall the repeal affect any ordinance or resolution promising or guaranteeing the payment of money for the city or authorizing the issuance of any bonds of the city or any evidence of the city's indebtedness, or any contract or obligation assumed by the city; nor shall the repeal affect the administrative regulations or resolutions of the city council not in conflict or inconsistent with the provisions of the code; nor shall the repeal affect any right or franchise granted by any ordinance or resolution of the city council to any person, firm or corporation; nor shall the repeal affect any zoning ordinances, or amendments to the land use plan; nor shall the repeal affect any ordinance dedicating, naming, establishing, locating, relocating, opening, vacating, etc., any street or public way in the city; nor shall the repeal affect any annual budget or salary ordinance; nor shall the repeal affect any ordinance levying or imposing taxes; nor shall the repeal affect any ordinance establishing and prescribing the street grades of any street in the city; nor shall the repeal affect any ordinance providing for local improvements and assessing charges therefor; nor shall the repeal affect any ordinance extending the limits of the city; nor shall the repeal be construed to revive any ordinance or part thereof that has been repealed by a subsequent ordinance which is repealed by this ordinance; nor shall the repeal affect any ordinance or resolution establishing rates, fees or charges, except those specifically re-established in this code, until the council re-establishes such rates, fees or charges by ordinance or resolution. The continuance in effect of temporary and/or special ordinances and parts of ordinances, although omitted from the code, shall not be affected by such omission therefrom; and the adoption of the code shall not repeal or amend any such ordinance or part of any such ordinance.

SECTION 6 CODE NOT NEW ENACTMENT.

The provisions appearing in this code, so far as they are the same as those ordinances existing as of April 1, 1994, shall be considered as continuations thereof and not as new enactments.

SECTION 7 INCLUDES NEW OR REVISED PROVISIONS.

The provisions in this code, in addition to those identified in Section 6 hereof, include, but are not limited to, revised and new provisions or regulations adopted as of August 22, 1994, or thereafter including:

1. GENERAL PROVISIONS
2. ADMINISTRATION AND GOVERNMENT
3. ALCOHOLIC BEVERAGES
4. ANIMALS
5. BUILDINGS REGULATIONS AND CODES
6. COURT
7. FINANCE AND TAXATION
8. HEALTH AND NUISANCES
9. LICENSING AND BUSINESS REGULATIONS
10. OFFENSES AND CRIMES
11. PARKS, RECREATION AND CEMETERY
12. PLANNING, ZONING AND DEVELOPMENT
13. PUBLIC SAFETY
14. STREETS AND SIDEWALKS
15. TRAFFIC AND VEHICLES
16. TRANSPORTATION
17. UTILITIES

SECTION 8 ORDINANCES ADOPTED AFTER EFFECTIVE DATE OF CODE.

Ordinances and parts of ordinances of a permanent and general nature passed or adopted on and after the effective date of this code may be passed or adopted either:

1. In the form of amendments to the code of ordinances adopted by this ordinance; or

2. Without specific reference to the code.

In either case, all such ordinances and parts of ordinances shall be deemed amendments to the code. All of the substantive permanent and general parts of such ordinances and changes made thereby in the code, shall be inserted and made in the code whenever authorized or directed by resolution or ordinance of the council, as provided hereinafter.

SECTION 9 SUPPLEMENTS TO CODE.

By contract or by city personnel, a change, or supplement, to the code of ordinances adopted by this ordinance shall be prepared and printed whenever authorized or directed by the

city council. A change to the code shall include all substantive permanent and general parts of ordinances passed by the council or adopted by initiative and referendum during the period covered by the change and all changes made thereby in the code. The pages of a change shall be so numbered that they will fit properly into the code and, where necessary, replace pages which have become obsolete or partially obsolete, and new pages shall be so prepared that, when they have been inserted, the code will be up to date to the date to which the code is being brought up to date. The words "as amended" and the date, may be added to the title after the year. After every change has been prepared and printed, a number of copies of the change equal at least to the number of copies of the code still in existence, shall be deposited in the office of the city clerk. The city clerk, if possible, shall notify each holder of a copy of the original code about the availability of the change or supplement.

SECTION 10 SALE OF COPIES OF THE CODE.

The city clerk is hereby authorized and directed to sell copies of the code to the public at a price determined from time to time by resolution of the city council.

SECTION 11 COPY OF CODE IN CLERK OFFICE.

A copy of the current code as amended or supplemented from time to time shall be kept on file in the office of the city clerk. This copy of the code shall be available for all persons desiring to examine it; it shall be certified by the city clerk as may be required.

SECTION 12 PREPARATION OF CODE.

The code of ordinances hereby adopted consists of seventeen (17) Parts, all of which have been examined, considered and approved by the council of the City of Piedmont and adopted in compliance with Sections 14-109 et seq. of Title 11 of the Oklahoma Statutes.

SECTION 13 EMERGENCY CLAUSE.

It being immediately necessary for the preservation of the public peace, health, safety and welfare of the City of Piedmont and the inhabitants thereof that this ordinance shall be put into full force and effect, an emergency is hereby declared to exist by reason whereof this ordinance shall be in full force and effect from and after its passage and approval.

END

The undersigned hereby certify that the foregoing Ordinance was introduced before the Piedmont City Council on the 25th day of July, 1994, and was duly adopted and approved by the Mayor and City Council on the 22nd day of August, 1994, after compliance with notice requirements of the Open Meeting Law (25 OSA, Sections 301, et seq.).

ATTEST:

/s/ George C. Fina
Mayor

/s/ David K. Gardner
City Clerk

APPROVED as to form and legality on August 22, 1994.

/s/ David Davis
City Attorney

Published in the Piedmont-Surrey Gazette on August 25, 1994.

RESOLUTION NO. 8-22-94A

A RESOLUTION DIRECTING FILING AND NOTIFICATION OF THE PUBLICATION OF THE PIEDMONT CITY CODE, AND ESTABLISHING A FEE FOR THE SALE OF THE PIEDMONT CITY CODE.

WHEREAS, the City of Piedmont has compiled the City's Code of Ordinances, containing all ordinances adopted by the City prior to April 1, 1994; and

WHEREAS, the City is required to publish its code of compiled penal ordinances and to deposit a copy of the code with the county law library pursuant to Sections 14-109 and 14-110 of Title 11 of the Oklahoma Statutes; and

WHEREAS, the City is required to adopt a resolution notifying the public of the publication of its code pursuant to Section 14-110 of Title 11 of the Oklahoma Statutes and to file a copy of the resolution in the office of the county clerk; and

WHEREAS, the City is required, pursuant to Sections 14-107 (A) and 14-108 of Title 11 of the Oklahoma Statutes, to make legal publication by publishing the title and a condensed gist or summary thereof of the Code; and

WHEREAS, the City Council of the City of Piedmont, Oklahoma, desires to set a fee for the sale of the Piedmont City Code, to the public.

NOW THEREFORE BE IT RESOLVED BY THE MAYOR AND THE CITY COUNCIL OF THE CITY OF PIEDMONT, OKLAHOMA:

THAT the public is hereby notified of the publication of the Code of Ordinances and that copies of the code are available for review in the office of the city clerk; and

THAT the code consists of seventeen (17) parts whose titles are listed hereinafter:

1. General Provisions
2. Administration and Government
3. Alcoholic Beverages
4. Animals
5. Building Regulations and Codes
6. Court
7. Finance and Taxation

8. Health and Nuisances

9. Licensing and Business Regulations

10. Offenses and Crimes

11. Parks, Recreation and Cemetery

12. Planning, Zoning and Development

13. Public Safety

14. Streets and Sidewalks

15. Traffic and Vehicles

16. Transportation

17. Utilities

THAT the City Clerk shall cause to be filed one copy of this resolution with the Office of the County Clerk of Canadian County; and

THAT the City Clerk shall cause one copy of this resolution and one copy of the code to be filed with the Law Library of Canadian County; and

THAT the City Clerk shall keep at least one copy of the Piedmont Code of Ordinances in the office of the City Clerk for public use, inspection and examination; and.

THAT the city clerk shall charge a sum as set by the city for each copy of the City Code sold to the public.

ADOPTED and APPROVED by the Mayor and City Council of the City of Piedmont, Oklahoma, this 22nd day of August, 1994.

/s/ George C. Fina
Mayor

ATTEST: (Seal)

/s/ David K. Gardner
City Clerk

Approved as to form this 22nd day of August, 1994.

/s/ David Davis
City Attorney

CHARTER

OF THE

CITY OF PIEDMONT, OKLAHOMA

PREAMBLE

ARTICLE 1

INCORPORATION; FORM OF GOVERNMENT; POWERS

Section 1-1	Incorporation.
Section 1-2	Form of government.
Section 1-3	Powers of the city.
Section 1-4	Construction.
Section 1-5	Intergovernmental relations.

ARTICLE 2

THE COUNCIL

Section 2-1	Councilmembers: number, qualifications,and term.
Section 2-2	Mayor: qualifications, duties.
Section 2-3	Vice-mayor: appointment, duties.
Section 2-4	Mayor and council: compensation.
Section 2-5	Council: powers.
Section 2-6	Council: appointments and removals.
Section 2-7	City clerk to be clerical officer of council.
Section 2-8	Council: meetings.
Section 2-9	Councilmember: absence to terminate membership.
Section 2-10	Councilmembers: removal.
Section 2-11	Council: vacancies.
Section 2-12	Council: quorum, rules, roll call, vote required.
Section 2-13	Ordinances: enacting clause.
Section 2-14	Ordinances: passage, publications, when in effect.
Section 2-15	Ordinances: emergency.
Section 2-16	Ordinances: adoption by reference.
Section 2-17	Ordinances: codification.
Section 2-18	Initiative and referendum.

ARTICLE 3

CITY ADMINISTRATOR AND ADMINISTRATIVE DEPARTMENTS

Section 3-1	City administrator: appointment, term, qualifications, removal.
Section 3-2	Temporary absence or disability of city administrator.
Section 3-3	City administrator: powers and duties.
Section 3-4	Administrative department, offices, and agencies.

ARTICLE 4

DEPARTMENT OF FINANCE, FISCAL AFFAIRS

Section 4-1	City clerk: office created, duties.
Section 4-2	City treasurer: office created, duties.
Section 4-3	Purchases and sales.
Section 4-4	Sale of property valued at more than Ten Thousand Dollars ($10,000.00).
Section 4-5	Public improvements.
Section 4-6	Fiscal year.
Section 4-7	Independent annual audit.

ARTICLE 5

OFFICERS TO BE APPOINTED BY COUNCIL

Section 5-1	City attorney: appointment, term, qualifications, duties.
Section 5-2	Municipal courts.

ARTICLE 6

ELECTIONS

Section 6-1	No city primary: general election only.
Section 6-2	Election: terms: nonpartisan elections: etc.
Section 6-3	Wards: number: equal, etc.
Section 6-4	Election: filing.
Section 6-5	Election: time, etc.
Section 6-6	Election: who elected.
Section 6-7	Qualified electors.
Section 6-8	Elections: when not held.
Section 6-9	State constitution and law to govern.
Section 6-10	Political activity of officers and employees.

ARTICLE 7

RECALL

Section 7-1	Recall authorized.
Section 7-2	Recall petition.
Section 7-3	Recall election: council to order.
Section 7-4	Recall election: how held.
Section 7-5	Person recalled or resigning.

ARTICLE 8

OFFICERS AND EMPLOYEES GENERALLY

Section 8-1	Merit system created: appointments, removals, etc.; personnel rules.
Section 8-2	Personnel board created.
Section 8-3	Classified and unclassified services.

Section 8-4 Removal, etc.; hearing before the personnel board.
Section 8-5 Nepotism.
Section 8-6 Holding more than one office.
Section 8-7 Bonds of officers and employees.
Section 8-8 Oath or affirmation of office.
Section 8-9 Who may administer oaths and affirmations.
Section 8-10 Removal, etc., of officers and employees.
Section 8-11 Acting officers and employees.
Section 8-12 Officers to continue until successors are elected or appointed and qualify.
Section 8-13 Conflict of interests.
Section 8-14 Feminine gender.

ARTICLE 9

AMENDMENT AND SEPARABILITY OF CHARTER

Section 9-1 Amendment: proposal, ratification, approval.
Section 9-2 Separability.

ARTICLE 10

SUCCESSION IN GOVERNMENT

Section 10-1 When charter goes into effect.
Section 10-2 Officers and employees to continue.
Section 10-3 Ordinances continued.
Section 10-4 Pending actions and proceedings.

ARTICLE 11

PLANNING AND ZONING, OIL AND GAS REGULATION, AND REGULATION OF HAZARDOUS WASTE DISPOSAL

Section 11-1 General grant of power.

ARTICLE 12

POLICE DEPARTMENT AND FIRE DEPARTMENT

Section 12-1 Volunteer fire department and reserve police department.

ARTICLE 13

RIGHT TO BEAR ARMS

Section 13-1 Right of citizens to bear arms.

CHARTER

OF THE

CITY OF PIEDMONT, OKLAHOMA

PREAMBLE

We, the people of the City of Piedmont, exercising the powers of home rule granted to us by the Constitution and laws of the State of Oklahoma in order to provide for more efficient, adequate, and economical government, do hereby ordain, ratify, and establish this Charter of the City of Piedmont, Oklahoma.

ARTICLE 1

INCORPORATION; FORM OF GOVERNMENT; POWERS

SECTION 1-1 INCORPORATION.

The City of Piedmont, Oklahoma, within the corporate limits as now established or as hereafter may be established, shall continue to be a municipal body politic and corporate in perpetuity under the name of "City of Piedmont". It shall succeed to and possess all the property, rights, privileges, franchises, powers, and immunities now belonging to the corporation known as the Town of Piedmont; and shall be liable for all debts and other obligations for which the corporation is legally bound at the time this charter goes into effect. The City of Piedmont, Oklahoma, may not be annexed by any other City, or be merged into a combined City-County government or other government unit unless approved by a majority of the qualified electors voting thereon at an election.

SECTION 1-2 FORM OF GOVERNMENT.

The municipal government provided by this charter shall be a "Council-City Administrator government". All powers of the City shall be exercised in the manner prescribed by this charter, or, if the manner is not thus prescribed, then in such manner as the council may prescribe by ordinance.

SECTION 1-3 POWERS OF THE CITY.

The City shall have all powers possible for a City operating under a home-rule charter to have under the constitution and laws of this State as fully and completely as though they were specifically enumerated in this charter.

SECTION 1-4 CONSTRUCTION.

The powers of the City under this charter shall be construed liberally in favor of the City, and the specific mention of particular powers in the charter shall not be construed as limiting in any way the general power stated in this article.

SECTION 1-5 INTERGOVERNMENTAL RELATIONS.

The City may exercise any of its powers to perform any of its functions and may participate in the financing thereof, jointly or in cooperation, by contract or otherwise, with any one or more states or civil divisions or agencies thereof, or the United States or any agency thereof.

ARTICLE 2

THE COUNCIL

SECTION 2-1 COUNCILMEMBERS: NUMBER, QUALIFICATIONS,AND TERM.

(a) There shall be a council of five (5) members, which shall consist of one councilmember from each of the five (5) wards of the City.

(b) Only qualified electors of the City who reside in the respective wards from which they are elected or appointed to fill a vacancy shall be qualified for the office of councilmember from the wards. A change in ward boundaries shall not prohibit a councilmember from completing his term of office. A councilmember may not hold any office or position in the City government by appointment by the City Administrator or by any subordinate of the City Administrator. If a councilmember is convicted of a felony, his office shall become vacant immediately upon conviction.

(c) Notwithstanding any other provision of this charter, a person who is already a volunteer fireman or in any other volunteer service of the City at the time he becomes a councilmember may continue in such volunteer service and receive such compensation as may be provided therefor.

(d) The Councilmembers shall be elected for a term of three (3) years.

SECTION 2-2 MAYOR: QUALIFICATIONS, DUTIES.

The Mayor shall be a qualified elector of the City. The Council shall appoint one of its members as Mayor on the first meeting in May of each year beginning in May, 1985. The Mayor will serve for one (1) year, or until his successor qualifies. He shall preside at all meetings of the Council, and may participate with, and have a vote in all proceedings of and business transacted by the Council; but he shall have no power of veto. He shall certify all ordinances and resolutions passed by the Council. He shall sign all contracts awarded by the Council, all warrants drawn on the City Treasury in payment of claims and obligations of the City duly authorized by the Council, and all commissions and certificates of appointment made by the Council. He shall, by proclamation, call all special elections of the City designating the polling places, and the officials to conduct the same as shall be authorized by the Council, the Constitution, and general laws of the State or this charter. He shall perform such other ministerial duties as the Council may direct, and such other special duties as may be required by law. He shall be recognized as head of the City Government for all ceremonial purposes and by the governor for purposes of military law. He shall have no regular administrative duties except as otherwise provided in this Charter.

SECTION 2-3 VICE-MAYOR: APPOINTMENT, DUTIES.

The Council shall appoint one of its members Vice-Mayor on the first meeting in May of each year beginning in May, 1985. The Vice-Mayor shall serve for a term of one (1) year. He shall act as Mayor during the absence or disability of the Mayor, and if a vacancy occur, shall

become Mayor for the completion of the unexpired term. If, by succession to the office of Mayor or otherwise the office of Vice-Mayor becomes vacant, the Council shall appoint another Vice-Mayor.

SECTION 2-4 MAYOR AND COUNCIL: COMPENSATION.

The Mayor and each Councilmember shall receive such compensation as may be prescribed by ordinance; provided that neither the compensation of the Mayor or of any Councilmember shall be changed after his election or during his term of office, and further provided that the compensation of Councilmembers shall not exceed Thirty-Five Dollars ($35.00) per month per member. Effective with the approval of this Charter the compensation of the Councilmembers shall be Fifteen Dollars ($15.00) per month per member until changed by Ordinance.

SECTION 2-5 COUNCIL: POWERS.

Except as otherwise provided in this charter, all powers of the City including the determination of all matters of policy, shall be vested in the Council. Without limitation of the foregoing, the Council shall have power subject to the State Constitution, law, and this charter:

(1) To appoint and remove the City Administrator;

(2) By ordinance to enact municipal legislation;

(3) To adopt the budget, raise revenue, and make appropriations; and to regulate bond elections, the issuance of bonds, sinking funds, the refunding of indebtedness, salaries, wages, and other compensation of officers and employees, and all other fiscal and business affairs by the City;

(4) To inquire into the conduct of any office, department, or agency of the City government, and investigate municipal affairs; and for this purpose, to subpoena witnesses, take testimony, and require the production of evidence;

(5) To appoint or elect and remove the City Attorney, Municipal Judge, the members of the personnel board, the members of the Planning Commission, the members of the Board of Adjustment, and other quasi-legislative, quasi-judicial, or advisory personnel, now or when and if established; or to prescribe the method of appointing or electing and removing them;

(6) To regulate elections and the recall;

(7) To create change, and abolish all offices, departments, and agencies of the City government other than the offices, departments, and agencies created by this charter; and to assign additional powers and duties consistent with this charter to offices, departments, and agencies created by this charter;

(8) To engage directly or indirectly in advocacy calculated to influence legislative matters at all levels of government.

(9) To define, control, and prohibit public nuisances within the City of Piedmont.

(10) To determine all local matters of policy, except as may be prohibited by the Oklahoma Constitution.

SECTION 2-6 COUNCIL: APPOINTMENTS AND REMOVALS.

Neither the Council, Mayor, nor any of its other members may direct or request the appointment of any person to, or his removal from, office or employment by the City Administrator or by any other authority; or, except as provided in this charter, participate in any manner in the appointment or removal of officers and employees of the City, other than the expression of views and the giving of information to the appointing authority. Except for the purpose of inquiry, the Council and its members shall deal with subordinates of the City Administrator solely through the City Administrator; and neither the Council nor any member thereof may give orders on administrative matters to any subordinate of the City Administrator either publicly or privately.

SECTION 2-7 CITY CLERK TO BE CLERICAL OFFICER OF COUNCIL.

The City Clerk shall serve as clerical officer of the Council. He shall keep the journal of its proceedings, and shall enroll in a book or books kept for the purpose, all ordinances and resolutions passed by it; shall be custodian of such documents, records, and archives as may be provided by applicable law or ordinance; and shall have such other powers and duties consistent with this charter as may be prescribed by ordinance or applicable law.

SECTION 2-8 COUNCIL: MEETINGS.

The Council shall hold at least one regular meeting every month at such time as it may prescribe by ordinance or otherwise. The Mayor or any three (3) councilmembers may call special meetings. All meetings of the Council, except as otherwise authorized by law, shall be open to the public, and the journal of its proceedings shall be open to public inspection, except the City Council may conduct executive sessions for the purposes enumerated in the Oklahoma Open Meeting Law as it now exists and as it may hereinafter be amended.

SECTION 2-9 COUNCILMEMBER: ABSENCE TO TERMINATE MEMBERSHIP.

If the Mayor or any other councilmember is absent from more than one-half (1/2) of the meetings of the Council, regular and special, held within any period of four (4) consecutive calendar months, he shall cease to hold office effective with the entering of a certificate of such absence in the official records of the City by the City Clerk. The City Clerk is hereby charged with the responsibility of keeping records of such absences.

SECTION 2-10 COUNCILMEMBERS: REMOVAL.

A councilmember may be removed from office for any cause specified by applicable state law for the removal of officers, and by the method or methods prescribed thereby. A councilmember may also be removed by recall as provided by this charter.

SECTION 2-11 COUNCIL: VACANCIES.

(a) The council, by majority vote of its remaining members, shall fill vacancies in its own membership for the unexpired terms or until successors are elected as provided in this section.

(b) If a vacancy occurs within sixty (60) days of a regular Council election and the unexpired, vacant term extends beyond the time when the terms of councilmember elected that year begin, then a councilmember for that vacant seat shall be elected at the election of that year to serve the rest of the unexpired term beginning at the time the terms of councilmember elected that year begin.

SECTION 2-12 COUNCIL: QUORUM, RULES, ROLL CALL, VOTE REQUIRED.

A majority of all of the members of the Council shall constitute a quorum, but a smaller number may adjourn or recess from time to time. The Council may determine its own rules. On the request of any member the vote on any question shall be by roll call, and shall be entered in the journal. An affirmative vote of a majority of all the councilmembers is required for the passage or adoption of any ordinance.

SECTION 2-13 ORDINANCES: ENACTING CLAUSE.

The enacting clause of all ordinances passed by the Council shall be: "Be it ordained by the Council of the City of Piedmont, Oklahoma"; and of all ordinances proposed by the voters under their power of initiative: "Be it ordained by the People of the City of Piedmont, Oklahoma".

SECTION 2-14 ORDINANCES: PASSAGE, PUBLICATIONS, WHEN IN EFFECT.

(a) Every proposed ordinance shall be introduced before the Council and an affirmative vote of a majority of all the councilmembers shall be required for its passage. The vote of each councilmember shall be entered in the journal.

(b) Within ten (10) days after its passage every ordinance shall be published by number, title, and brief gist in a newspaper of general circulation within the City.

(c) Every ordinance except an emergency ordinance so published shall become effective thirty (30) days after its final passage unless it specifies a later time.

(d) Except when waived by the City Council and the reasons therefor recorded in the minutes, all ordinances, except emergency ordinances, shall be introduced at a regular or special meeting of the Council, and final consideration and the vote thereon deferred until the next regular or special meeting of the Council which shall be no less than ten (10) days following introduction.

SECTION 2-15 ORDINANCES: EMERGENCY.

An emergency ordinance is an ordinance which, in the judgment of the Council, is necessary for the immediate preservation of peace, health, or safety, and which should become effective prior to the time when an ordinary ordinance would become effective. Every such ordinance shall contain, as a part of its title, the words, "and declaring an emergency"; and in a separate section herein called the emergency section shall declare the emergency. An affirmative vote of at least four (4) councilmembers shall be required for the passage of an emergency ordinance. An emergency ordinance shall take effect upon passage unless it specifies later time.

SECTION 2-16 ORDINANCES: ADOPTION BY REFERENCE.

The Council by ordinance may adopt by reference, with or without modification, codes, standards, and regulations relating to building, plumbing, electrical installations, milk and milk products,and other matters which it has power to regulate otherwise. Such code, standard, or regulation so adopted need not be enrolled in the book of ordinances, but a copy shall be filed and kept in the office of the City Clerk.

SECTION 2-17 ORDINANCES: CODIFICATION.

The permanent, general Ordinances of the City shall be codified and published in book or pamphlet form at least every ten (10) years unless the Council, by use of a loose-leaf or supplement system, provides for keeping the code up-to-date. The ordinances and parts of ordinances included in the code may be revised, rearranged, and reorganized; and the code may contain new matter, provisions of the State Constitution and law applicable to the City, and this charter. A copy of the published code shall be filed in the office of the City Clerk after the Council adopts the code by ordinance, but the code need not be enrolled in the book of ordinances.

SECTION 2-18 INITIATIVE AND REFERENDUM.

The powers of the initiative and referendum are reserved to the people of the City. In the exercise of these powers the requirements of the State Constitution and law shall be observed.

ARTICLE 3

CITY ADMINISTRATOR AND ADMINISTRATIVE DEPARTMENTS

SECTION 3-1 CITY ADMINISTRATOR: APPOINTMENT, TERM, QUALIFICATIONS, REMOVAL.

(a) There shall be a City Administrator. The Council shall appoint him for an indefinite term by a vote of a majority of all its members, provided he shall be appointed only at a meeting with four (4) councilmembers present. It shall choose him on the basis of his executive and administrative qualifications. At the time of his appointment, he need not be a resident of the City or State; but, within one year of his appointment he shall become an actual resident within the City. Provided, the City Council may extend said time for residency by majority vote of all its members upon a finding that an economic hardship exists, or would exist, on the part of the City Administrator then serving and/or to be employed which hardship would deprive the City of a qualified Administrator if the time for residency requirement were not extended. It is the intent of this residency requirement that, considering all factors, it would be in the best interest of the City if the requirement does not deprive the City of the most qualified person at a reasonable cost. Neither the Mayor nor any other councilmember hereafter elected may be appointed City Administrator or acting City Administrator during his term, nor within one year after the expiration of his term.

(b) The Council may suspend or remove the City Administrator at any time by a vote of a majority of all its members.

SECTION 3-2 TEMPORARY ABSENCE OR DISABILITY OF CITY ADMINISTRATOR.

By letter filed with the City Clerk the City Administrator may designate, subject to council approval, a qualified City administrative officer to be acting City Administrator during his temporary absence or disability. The City Administrator or the Council may revoke such designate at any time, and another person may be designated acting City Administrator to serve during such times. If the City Administrator fails to make such designation the Council may appoint an acting City Administrator to serve during such time. The Council may remove an acting City Administrator at any time.

SECTION 3-3 CITY ADMINISTRATOR: POWERS AND DUTIES.

The City Administrator shall be chief administrative officer and head of the administrative branch of the City government. Under the supervision of the City Council he shall execute the laws and ordinances, and administer the government of the City, and shall be responsible therefor to the Council. He shall:

(1) Appoint, and when deemed necessary for just cause lay off, suspend, demote, or remove all directors, heads of administrative departments, and all other administrative officers and employees of the City, except as he may authorize the head of a department, an officer, or an agency to appoint, lay off, suspend, demote, and remove subordinates in such department, office, or agency. Provided, the heads of administrative departments shall make employee selections, and shall recommend disciplinary actions to the City Administrator.

(2) Supervise and control, directly or indirectly, all administrative departments, agencies, officers, and employees.

(3) Prepare a budget annually and submit it to the Council, be responsible for the administration of the budget after it goes into effect, and recommend to the Council any changes in the budget which he deems desirable.

(4) Submit to the Council a report as of the end of the fiscal year on the finances and administrative activities of the City for the preceding year.

(5) Keep the Council advised of the financial condition and future needs of the City, and make such recommendations to the Council on matters of policy and other matters as may seem to him desirable.

(6) Have such other powers and duties as this charter may prescribe, and such powers and duties consistent with this charter as the Council may prescribe.

SECTION 3-4 ADMINISTRATIVE DEPARTMENT, OFFICES, AND AGENCIES.

There shall be a Department of Finance, a Police Department, a Fire Department, and such other administrative departments, offices, and agencies as are established by this charter and as the Council may establish.

ARTICLE 4

DEPARTMENT OF FINANCE, FISCAL AFFAIRS

SECTION 4-1 CITY CLERK: OFFICE CREATED, DUTIES.

There shall be a City Clerk, who shall be an officer of the City appointed by the City Council for an indefinite term, and who shall be head of the Department of Finance. Subject to such regulations as the Council may prescribe, the City Clerk shall collect or receive revenue and other money for the City, and shall deposit same with the City Treasurer in an account or accounts maintained by the City Treasurer in a depository or depositories. The City Clerk shall maintain a general accounting system for the City government.

SECTION 4-2 CITY TREASURER: OFFICE CREATED, DUTIES.

There shall be a City Treasurer, who shall be an officer of the City appointed by the City Council for an indefinite term. Subject to such regulations as the Council may prescribe, the City Treasurer shall deposit all funds coming into his hands in such depositories as the Council may designate. The same person may hold the office of both City Clerk and City Treasurer.

SECTION 4-3 PURCHASES AND SALES.

The City Administrator, subject to any regulations which the Council may prescribe, shall contract for and purchase, or issue purchase orders for, all supplies, materials, and equipment for offices, departments, and agencies of the City government. Every such contract or purchase exceeding an amount to be established by ordinance shall require the prior approval of the Council. The City Administrator also may transfer to or between offices, departments, and agencies, or sell surplus or obsolete supplies, materials, and equipment subject to such regulations as the Council may prescribe.

SECTION 4-4 SALE OF PROPERTY VALUED AT MORE THAN TEN THOUSAND DOLLARS ($10,000.00).

The sale of any property, real or personal, or of any interest therein the value of which is more than Ten Thousand Dollars ($10,000.00), shall be made only by authority of a special ordinance other than an emergency ordinance. Such ordinance shall be published in full in a newspaper of general circulation within the City within ten (10) days after its passage, and shall include a section reading substantially as follows:

> "Section _____. This ordinance shall be referred to a vote of the electors of the City if a proper referendum petition is properly filed within thirty (30) days after its passage; otherwise, it shall go into effect thirty (30) days after its passage."

SECTION 4-5 PUBLIC IMPROVEMENTS.

Public improvements may be made by the City government itself or by contract. The Council shall award all contracts for such improvements; provided, that the Council may authorize the City Administrator to award such contracts not exceeding an amount to be determined by the Council, and subject to such regulations as the Council may prescribe. Every contract for public improvements of more than Seven Thousand Five Hundred Dollars ($7,500.00), or such amount as may be required by the Oklahoma Public Competitive Bidding Act, shall be awarded to the lowest and best responsible bidder after such notice and opportunity for competitive bidding as the Council may prescribe. All bids may be rejected and further notice and opportunity for competitive bidding may be given. Such contracts may be altered by mutual consent of the parties. Public improvement means any beneficial or valuable change or addition, betterment, enhancement, or amelioration of or upon any real property, or interest therein, belonging to a public agency, intended to enhance its value, beauty or utility, or to adapt it to new or further purposes. The term does not include the direct purchase of materials, equipment, or supplies by a public agency. Nothing herein shall prevent the City from constructing public improvements by the Force Account method.

SECTION 4-6 FISCAL YEAR.

The fiscal year of the City government shall begin on the first day of July and shall end on the last day of June of every calendar year.

SECTION 4-7 INDEPENDENT ANNUAL AUDIT.

The Council may designate a qualified public accountant or accountants who shall make an independent annual audit of the accounts and evidences of financial transactions of the department of finance an all other departments, offices, an agencies keeping separate or subordinate accounts or making financial transactions as of the end of every fiscal year, or more often at the discretion of the Council, and who shall report to the Council and to the City Administrator. In lieu of the above the Council may arrange with an appropriate state authority for such an audit when and if permitted by law.

ARTICLE 5

OFFICERS TO BE APPOINTED BY COUNCIL

SECTION 5-1 CITY ATTORNEY: APPOINTMENT, TERM, QUALIFICATIONS, DUTIES.

The Council shall appoint a City Attorney for an indefinite term. The City Attorney shall be licensed to practice law in the courts of the State of Oklahoma. The Council may suspend or remove the City Attorney by a majority vote of all its members. It shall be the duty of the City Attorney to attend Council meetings; to prepare ordinances and resolutions when directed by the Council or other proper authority of the City; to advise the Council, City Administrator, and with Council approval other officers of the City as regards their official powers, duties, and responsibilities, upon request; to represent the City in suits in which the City is a party; and to perform such other duties as may be prescribed by law, this charter, or ordinance.

SECTION 5-2 MUNICIPAL COURTS.

(a) Cases arising out of violations of the ordinances of the City shall be tried by the existing municipal court created by state law or a lawful successor of such court created by state law; provided, that the Council by ordinance shall have power to create a municipal court to hear and determine such cases if and when it deems it necessary or desirable to do so.

(b) The Council shall appoint a Judge of the municipal court for an indefinite term. The Council may suspend or remove the Municipal Judge by a majority vote of all its members. The Municipal Judge shall have original jurisdiction to hear and determine all cases involving offenses against the City of Piedmont.

ARTICLE 6

ELECTIONS

SECTION 6-1 NO CITY PRIMARY: GENERAL ELECTION ONLY.

There shall be no City primary election but only a City general election, herein also called election.

SECTION 6-2 ELECTION: TERMS: NONPARTISAN ELECTIONS: ETC.

(a) A general election shall be held on the first Tuesday in April of 1985, and every year thereafter from the election of those Councilmembers whose terms expire in that year.

(b) At the election in 1985, the Councilmembers from Wards Two (2) and Four (4) shall be elected for a term of three (3) years.

(c) In 1986 no election shall be held.

(d) At the election in 1987, the Councilmembers from Wards Three (3) and Five (5) shall be elected for a term of three (3) years, and the Councilmember from Ward One (1) shall be elected for a term of two (2) years.

(e) At the election in 1989, the Councilmember from Ward One (1) shall be elected for a term of three (3) years.

(f) Those persons serving as members of the board of Trustees of the Town of Piedmont shall continue to serve after the adoption and approval of this Charter as Councilmembers of the City of Piedmont until their current terms expire.

(g) The Councilmembers and Mayor shall serve until their successors are elected and qualify, or until removed or recalled as provided by law.

(h) The terms shall begin at the time and date of the first regular Council meeting in May next following their election.

(i) The Councilmembers from the Wards shall reside in the Ward for which they become a candidate, and shall be elected by Ward.

SECTION 6-3 WARDS: NUMBER: EQUAL, ETC.

(a) There shall be five (5) Wards which shall be numbered from one to five. The Ward boundaries shall remain as they are at the time this charter goes into effect until the Council changes them by ordinance.

(b) The Wards shall be formed of compact, contiguous territory, and shall be substantially equal in population.

(c) At intervals of not more than ten (10) years the Council shall review the Wards and their boundaries, and if necessary shall revise them to achieve and maintain substantial equality in population among the Wards.

SECTION 6-4 ELECTION: FILING.

Any person qualified for the office for which he is filing may have his name placed on the ballot or the election as a candidate for councilmember by filing with the secretary of the County Election Board, a sworn statement of his candidacy, specifying the office for which he is a candidate, and making any deposit required by law. The time for filing shall be a six (6) working-day period determined by the Council, which six (6) working-day period shall be not less than

fourteen (14) days nor more than thirty (30) days prior to the election. Working day is defined as Monday through Friday, excluding legal holidays.

SECTION 6-5 ELECTION: TIME, ETC.

All regular Council elections shall be held on the first Tuesday in April. If only one person is a candidate for an office to be filled, he shall be elected ipso facto, and his name shall not appear on the election ballot.

SECTION 6-6 ELECTION: WHO ELECTED.

In an election the candidate for each office to be filled receiving the greatest number of votes for that office shall be elected. In case of failure to elect because of a tie, the election shall be determined from among those tying, fairly by lot, by the County Election Board in a public meeting.

SECTION 6-7 QUALIFIED ELECTORS.

The term qualified elector as used in this charter means a person who has the qualifications prescribed for electors by the State Constitution and law, and who is registered as may be required by law.

SECTION 6-8 ELECTIONS: WHEN NOT HELD.

If there are no candidates and no questions to be voted upon at one election the election shall not be held.

SECTION 6-9 STATE CONSTITUTION AND LAW TO GOVERN.

The provisions of the State Constitution and law applicable to City elections shall govern such elections in this City insofar as they are applicable and are not superseded by this charter or by ordinance.

SECTION 6-10 POLITICAL ACTIVITY OF OFFICERS AND EMPLOYEES.

No officer or employee of the City, except the Mayor, other councilmembers, and personnel who receive no compensation for their services, may work for or against, or attempt to influence, the election or defeat of any candidate for councilmember; but this shall not prohibit the exercise of one's right of freedom of speech and his right to vote. Violation of this section shall constitute cause for removal from office or employment.

ARTICLE 7

RECALL

SECTION 7-1 RECALL AUTHORIZED.

Any councilmember may be recalled from office by the electors qualified to vote for the election of a successor to the incumbent in the manner provided in this article. Provided, no councilmember or Mayor shall be recalled until he shall have held such office for more than six (6) months.

SECTION 7-2 RECALL PETITION.

(a) To initiate recall proceedings a written statement proposing the recall of a councilmember shall be signed by twenty-five (25) or more qualified electors of the Ward which the councilmember represents, and shall be filed with the City Clerk after the incumbent has held the office at least six (6) months. The statement shall also contain the reason or reasons for which the recall is sought, in not more than two hundred (200) words. Within five (5) days the City Clerk shall mail a copy of such statement by registered, certified, or similar special mail to the officer at his residential address. Within ten (10) days after the statement is mailed to the officer the officer may make and file with the City Clerk a written statement in duplicate justifying his conduct in office in not more than two hundred (200) words; and the City Clerk, upon request, shall deliver one copy to one of the persons filing the statement proposing the recall.

(b) The petition for recall shall include a demand that a successor to the incumbent sought to be recalled be elected, and shall also include before the space where the signatures are to be written the statement giving the reason or reasons for recall under the heading "STATEMENT FOR RECALL", and if the officer has filed a statement as authorized, the statement justifying his conduct in office under the heading "STATEMENT AGAINST RECALL". The two statements shall be in letters of the same size. A copy of the petition shall be filed with the City Clerk within 30 days after recall proceedings are initiated by the filing of the first statement, and before the petition is circulated.

(c) A number of qualified electors of the Ward which the councilmember represents, equal at least to thirty percent (30%) of the total number of votes cast for governor in the Ward at the last general state election at which a governor was elected, must sign the petition. Each signer shall write after his name his address within the City, giving street or avenue and number, if any. Not more than one hundred (100) signatures may appear on a single copy of the petition. Petitions may be circulated only by qualified electors of the City, and the person who circulates each copy of the petition shall sign an affidavit on the copy stating that each signer of the petition signed the petition in his presence, that each signature on the petition is genuine, and that he believes each signer to be a qualified elector of the City.

(d) The circulated petition shall be filed with the City Clerk not later than 30 days after the filing of a copy as provided above. Within fifteen (15) days after date of filing of the circulated petition the City Clerk shall examine it and ascertain whether it has been prepared and circulated as required, and whether the required number of qualified electors of the City have signed it. He shall then attach his certificate to the petition. If his certificate states that the petition has not been prepared and circulated as required and/or lacks a sufficient number of signatures, the petition shall have no effect. But if the City Clerk's certificate states that the petition has been prepared and circulated as required and has sufficient number of signatures, he shall submit the petition and certificate to the Council at its next meeting.

SECTION 7-3 RECALL ELECTION: COUNCIL TO ORDER.

(a) The Council, by resolution or ordinance passed at the next regular meeting after receiving the petition and certificate of the City Clerk, shall order and fix the date for a recall election, which shall be held not less than thirty (30) days or more than forty-five (45) days after passage of the resolution or ordinance. The City Clerk shall cause the resolution or ordinance ordering the election to be published in full in a newspaper of general circulation within the City within ten (10) days after its passage, and such publication shall be sufficient notice of the election.

(b) The City Council shall fix the filing period for filing of candidates in the recall election.

(c) If only the incumbent should file in the recall election, then the election would be either for or against his recall. If the recall is approved, then the office becomes vacant and the Council shall fill the vacancy by a majority vote of the remaining members, provided the persons recalled shall not be reappointed.

SECTION 7-4 RECALL ELECTION: HOW HELD.

(a) The recall election shall be an election to fill the office held by the incumbent sought to be recalled. Any qualified person, including the incumbent, may file as a candidate for the office. The candidate receiving the greatest number of votes in the recall election shall be elected. If a candidate other than the incumbent is elected, the incumbent shall be recalled from office effective as of the time when the result of the election is certified. The successful candidate must qualify within thirty (30) days thereafter; and if he fails to do so, the office shall be vacant and the vacancy shall be filled as other vacancies in the Council are filled. A candidate thus elected and qualifying shall serve for the unexpired term. If the incumbent is a candidate and receives the greatest number of votes, he shall continue in office without interruption, and recall proceedings may not again be initiated against him within one (1) year after the election.

(b) The provisions of this charter relating to City elections shall also govern recall elections insofar as they are applicable and are not superseded by the provisions of this article.

SECTION 7-5 PERSON RECALLED OR RESIGNING.

A person who has been recalled from an office or who has resigned from such office while recall proceedings were pending against him may not be appointed to office or position of employment in the City government within two (2) years after his recall or resignation, but may become a candidate for Council position at the next regular election held for the Ward in which he resides.

ARTICLE 8

OFFICERS AND EMPLOYEES GENERALLY

SECTION 8-1 MERIT SYSTEM CREATED: APPOINTMENTS, REMOVALS, ETC.; PERSONNEL RULES.

A merit system is hereby established for personnel in the City service. Appointments and promotions in the service of the City shall be made solely on the basis of merit and fitness; and removals, demotions, suspensions,and lay offs shall be made solely for just cause. The Council, consistently with this Charter, by ordinance or personnel rules may regulate personnel matters and provide for proper personnel administration. The City Council shall adopt written personnel policies and job descriptions for the classified service within one year of the effective date of this Charter.

SECTION 8-2 PERSONNEL BOARD CREATED.

(a) There shall be a personnel board of consisting of three (3) members appointed by the Council for overlapping five-year terms. The Council may also appoint an alternate member to serve. The term of each member shall begin July 1st. The Council shall appoint the original members so that the term of each member will expire in a different year. A member may not hold any other office or position of employment in the City government. The Council, by a vote of a majority of all its members, after adequate opportunity for a public hearing, may remove a member of the personnel board for just cause; and the vote shall be by roll call, and shall be entered in the journal. The Council shall fill vacancies for the unexpired terms. Members shall serve without compensation unless the Council provides otherwise.

(b) At the time prescribed for the beginning of the term of a newly appointed member or as soon thereafter as practicable, the board shall elect a chairman, vice-chairman, and a secretary, who need not be a member of the board. The board shall determine the time and place of its regular meetings, and the chairman or two members may call special meetings. The chairman shall have power to administer oaths and affirmations.

(c) The personnel board shall have power to subpoena officers and employees of the City and other persons to testify and to produce documents and other effects as evidence.

SECTION 8-3 CLASSIFIED AND UNCLASSIFIED SERVICES.

(a) All officers and employees of the City shall be divided into the classified and the unclassified service.

(b) The following shall constitute the unclassified service:

(1) The Mayor and other councilmembers, the municipal judge or judges, and the City Clerk and City Treasurer when appointed by the Council.

(2) The City Administrator, one Assistant City Administrator, if any, the principal secretary to the City Administrator, if any, and the City Attorney.

(3) Members and secretary of each board, commission, or other plural authority.

(4) All personnel who serve without compensation, except volunteer Firefighters and reserve Police Officers.

(5) All temporary and all part-time officers and employees, except those whom the Council may place in the classified service by ordinance or personnel rules.

(c) All other officers and employees shall be in the classified service.

(d) Nothing herein shall prohibit including unclassified personnel in the classification plan for pay purposes.

SECTION 8-4 REMOVAL, ETC.; HEARING BEFORE THE PERSONNEL BOARD.

(a) The City Administrator or any other authority who lays off, suspends without pay for more than ten (10) days, demotes, or removes any officer or employee in the classified service

after a probationary period of six (6) months shall, at that time or within five (5) days thereafter, deliver, have delivered, or mail by registered, certified, or similar special mail, to the officer or employee a written statement of the reason or reasons for the lay off, suspension, demotion, or removal.

(b) Such officer or employee may appeal in writing to the personnel board. The appeal must be filed with the secretary of the board or with the City Clerk for tranmittal [transmittal] to the board within ten (10) days after receipt of notice of the lay off, suspension, demotion, or removal.

(c) As soon as practicable thereafter the board shall hold a public hearing on the appeal, or give an adequate opportunity therefor, and shall report in writing its findings and recommendations in cases of subordinates of the City Administrator to the City Administrator, and in other cases to the respective authorities having power of removal within thirty (30) days after the conclusion of hearing. The City Administrator or other authority having power of removal shall then make a final decision in writing regarding the appellant's lay off, suspension, demotion, or removal, as the case may be; provided, if the board finds that the lay off, suspension, demotion, or removal was made for a political reason or reasons, or for any other reason or reasons than just cause, it shall modify or veto the lay off, suspension, demotion, or removal, and the action by the City Administrator or other authority shall be nullified thereby.

SECTION 8-5 NEPOTISM.

Neither the City Administrator, the Council, nor any other authority of the City government may appoint or elect any person related to any councilmember, City Administrator, or to himself, or in the case of a plural authority to one of its members, by affinity or consanguinity within the third degree, to any office or position of profit in the City government, but this shall not prohibit an officer or employee already in the service of the City from continuing and being promoted therein.

SECTION 8-6 HOLDING MORE THAN ONE OFFICE.

Except as may be otherwise provided by this charter or by ordinance the same person may hold more than one office in the City government. The City Administrator may hold more than one such office through appointment by the Council, or by other City authority having power to fill the particular office, subject to any regulations which the Council may make by ordinance. Also the Council, by ordinance, may provide that the City Administrator shall hold ex officio designated offices subordinate to the City Administrator as well as other designated compatible City offices, notwithstanding any other provision of this charter.

SECTION 8-7 BONDS OF OFFICERS AND EMPLOYEES.

The City Administrator, City Treasurer, City Clerk, and such other officers and employees as the Council may designate before entering upon their duties shall provide bonds for the faithful performance of their respective duties payable to the City, in such form and in such amounts as the Council may prescribe, with a surety company authorized to operate within the State. The City shall pay the premiums on such bonds.

first Tuesday of April of 1985, and every year thereafter for the election of those Councilmembers or Mayor whose terms expire in that year, and for filling vacancies as provided in Section 2-11 of this Charter.

(b) At the election in 1985, the Councilmembers from Wards Two (2) and Four (4) shall be elected for a term of three (3) years.

(c) In 1986, no election shall be held.

(d) At the election in 1987, the Councilmembers from Wards Three (3) and Five (5) shall be elected for a term of three (3) years, and the Councilmember from Ward One (1) shall be elected for a term of two (2) years.

(e) At the election in 1989, the Councilmember from Ward One (1) shall be elected for a term of three (3) years.

(f) Those persons serving as members of the Board of Trustees of the Town of Piedmont shall continue to serve after the adoption and approval of this Charter as Councilmembers of the City of Piedmont until their current terms expire.

(g) The Councilmembers and Mayor shall serve until their successors are elected and qualify, or until removed or recalled as provided by law.

(h) The terms shall begin at the time and date of the first regular Council meeting next following their election.

(i) The Councilmembers from the Wards shall reside in the Ward for which they become a candidate, and shall be elected by Ward.

ARTICLE 6. ELECTIONS

SECTION 6-1. NO CITY PRIMARY; GENERAL ELECTION ONLY. There shall be no City primary election but only a City general election, herein also called election.

SECTION 6-2. ELECTION; TERMS; NONPARTISAN ELECTIONS; ETC.

A. A general non-partisan election shall be held on the first Tuesday of April of 1985, and every year thereafter for the election of those Councilmembers or Mayor whose terms expire in that year, and for filling vacancies as provided in Section 2-11 of this Charter.

B. At the election in 1985, the Councilmembers from Wards two (2) and four (4) shall be elected for a term of three (3) years.

C. In 1986, no election shall be held.

D. At the election in 1987, the Councilmembers from Wards three (3) and five (5) shall be elected for a term of three (3) years, and the Councilmember from Ward one (1) shall be elected for a term of two (2) years.

E. At the election in 1989, the Councilmember form Ward one (1) shall be elected for a term of three (3) years.

F. Those persons serving as members of the Board of Trustees of the Town of Piedmont shall continue to serve after the adoption and approval of this Charter as Councilmembers of the City of Piedmont until their current terms expire.

G. The Councilmembers and Mayor shall serve until their successors are elected and qualify, or until removed or recalled as provided by law.

H. The terms shall begin at the time and date of the first regular Council meeting next following their election.

I. The Councilmembers from the Wards shall reside in the Ward for which they become a candidate, and shall be elected by Ward.

J. The Mayor shall be elected at large beginning in the year 1999.

K. A person may not be a candidate for the offices of Councilmember and Mayor at the same election.

L. An incumbent Councilmember is not required to resign his position as Councilmember to become a candidate for Mayor.

SECTION 6-3. WARDS: NUMBER; EQUAL, ETC.

A. There shall be five (5) Wards which shall be numbered from one to five. The Ward boundaries shall remain as they are at the time this Charter goes into effect until the Council changes them by ordinance.

B. The Wards shall be formed of compact, contiguous territory, and shall be substantially equal in population.

C. At intervals of not more than ten (10) years the Council shall review the Wards and their boundaries, and if necessary shall revise them to achieve and maintain substantial equality in population among the Wards.

SECTION 6-4. ELECTION: FILING. Any person qualified for the office for which he or she is filing may have their name placed on the ballot for the election as a candidate for Councilmember or Mayor by filing with the Secretary of the Canadian County Election Board a sworn statement of his candidacy, specifying the office for which they are a candidate, and making any deposit required by law. The time for filing shall be from 8:00 A.M. on the first Monday in February until 5:00 P.M. on the next following Wednesday. (

SECTION 6-5. ELECTION: TIME, ETC. All regular Council and Mayoral elections shall be held on the first Tuesday in April. If only one person is a candidate for an office to be filled, he shall be elected ipso facto, and his name shall not appear on the election ballot.

SECTION 6-6. ELECTION: WHO ELECTED. In an election the candidate for each office to be filled receiving the greatest number of votes for that office shall be elected. In case of failure to elect because of a tie, the election shall be determined from among those tying, fairly by lot, by the County Election Board in a public meeting.

SECTION 6-7. QUALIFIED ELECTORS. The term qualified elector as used in this Charter means a person who has the qualifications prescribed by electors by the State Constitution and law, and who is registered as may be required by law.

SECTION 6-8. ELECTIONS: WHEN NOT HELD. If there are no candidates and no questions to be voted upon at one election, the election shall not be held.

SECTION 6-9. STATE CONSTITUTION AND LAW TO GOVERN. The provisions of the State Constitution and law applicable to city elections shall govern such elections in this City insofar as they are applicable and are not superseded by this Charter or by ordinance.

SECTION 6-10. POLITICAL ACTIVITY OF OFFICERS AND EMPLOYEES. No officer or employee of the City, except the Mayor, other councilmembers, and personnel who receive no compensation for their services may work for or against, or attempt to influence the election or defeat of any candidate for councilmember; but this shall not prohibit the exercise of one's right to freedom of speech and his right to vote. Violation of this section shall constitute cause for removal from office or employment.

SECTION 6-10. POLITICAL ACTIVITY OF OFFICERS AND EMPLOYEES. No officer or employee of the City, except the Mayor, other councilmembers, and personnel who receive no compensation for their services may work for or against, or attempt to influence the election or defeat of any candidate for councilmember; but this shall not prohibit the exercise of one's right to freedom of speech and his right to vote. Violation of this section shall constitute cause for removal from office or employment.

ARTICLE 7. RECALL

SECTION 7-1. RECALL AUTHORIZED. Any councilmember or the Mayor may be recalled from office by the electors qualified to vote for the election of a successor to the incumbent in the manner provided in this article. Provided, no councilmember or Mayor shall be recalled until he shall have held such office for more than six (6) months.

SECTION 7-2. RECALL PETITION.

(a) To initiate recall proceedings a written statement proposing the recall of a councilmember or Mayor shall, in case of a councilmember, be signed by twenty-five (25) or more qualified electors of the Ward which the councilmember represents, or in the case of the Mayor, One Hundred twenty-five (125) or more electors of the City at large, and shall be filed with the City Clerk after the incumbent has held the office at least six (6) months. The statement shall also contain the reason or reasons for which the recall is sought in not more than two hundred (200) words. Within five (5) days the City Clerk shall mail a copy of such statement by

IN TESTIMONY WHEREOF, we hereunto set our hands at Piedmont, Oklahoma, this 25 day of July, 1984.

From Ward One:

/s/ Montee L. Hoffman
MONTEE L. HOFFMAN

/s/ Lucille Hall
LUCILLE HALL

From Ward Two:

/s/ George C. Fina
GEORGE C. FINA

/s/ Belva R. Siard
BELVA R. SIARD

From Ward Three:

/s/ Ken Dickerson
KEN DICKERSON

/s/ Thomas E. McClellan
THOMAS E. McCLELLAN

From Ward Four:

/s/ J. E. Redus
J. E. REDUS

/s/ Herman A. Cleaton
HERMAN A. CLEATON

From Ward Five:

/s/ Jerry Anduss
JERRY ANDUSS

/s/ Beulah Jech
BEULAH JECH

Subscribed and sworn to before me this _____ day of _____, 1984.

_____
NOTARY PUBLIC

My Commission Expires:

_____

PART I

GENERAL PROVISIONS

CHAPTER 1

DEFINITIONS, INTERPRETATION, APPLICABILITY, FINES

Section 1-101	Designation and citation of code.
Section 1-102	Rules of code construction, definitions,
Section 1-103	Authority of code.
Section 1-104	Conflicting provisions.
Section 1-105	References include amendments; construction.
Section 1-106	Catchlines and headings; construction.
Section 1-107	Code provisions as continuance of existing ordinances.
Section 1-108	Penalty.
Section 1-109	Each day of violation of code a separate offense.
Section 1-110	Prohibited acts include causing, permitting, concealing.
Section 1-111	Civil relief from violations of code of ordinances.
Section 1-112	Territorial applicability.
Section 1-113	Ordinances in effect in outlying territory of City.
Section 1-114	Code severability.

CHAPTER 2

STANDARD RULES: NOTICES, WARRANTS, INSPECTIONS, FEES, BONDS

Section 1-201	Acts of deputy or designee
Section 1-202	Notices; service and proof.
Section 1-203	Inspections and right of entry.
Section 1-204	Search warrant or access warrant.
Section 1-205	Schedule of fees and charges created.

CHAPTER 3

CORPORATE AND WARD LIMITS

Section 1-301	Maps of the City
Section 1-302	Ward boundaries.

(This page intentionally left blank)

CHAPTER 1

DEFINITIONS, INTERPRETATION, APPLICABILITY, FINES

Section 1-101	Designation and citation of code.
Section 1-102	Rules of code construction; definitions.
Section 1-103	Authority of code.
Section 1-104	Conflicting provisions.
Section 1-105	References include amendments; construction.
Section 1-106	Catchlines and headings; construction.
Section 1-107	Code provisions as continuance of existing ordinances.
Section 1-108	General penalty.
Section 1-109	Each day of violation of code a separate offense.
Section 1-110	Prohibited acts include causing, permitting, concealing.
Section 1-111	Civil relief from violations of code of ordinances.
Section 1-112	Territorial applicability.
Section 1-113	Ordinances in effect in outlying territory of City.
Section 1-114	Code severability.

SECTION 1-101 DESIGNATION AND CITATION OF CODE.

The ordinances embraced in this and the following chapters and sections shall constitute and be designated as "The City Code of Piedmont, Oklahoma," and may be so cited. The Code may also be cited as the City Code or in the provisions which following, as the "Code".

Charter Reference: Ordinances, codification, Sec. 2-17 of the Charter.

State Law Reference: Adoption and revision of codes and codes of ordinances, 11 O.S. Secs. 14-108, 14-109.

SECTION 1-102 RULES OF CODE CONSTRUCTION; DEFINITIONS.

A. In the construction of this code and all ordinances, the following rules of construction and definitions shall be observed unless inconsistent with the manifest intent of the City Council or the context clearly requires otherwise:

1. "Administrative regulations" means written orders which are issued by approval of the Mayor or City Manager of the City.

2. "Administrator" means the City Manager of the City.

3. "And/or" means "or", and "or" may read "and" if the same requires it.

4. "Bond" means an obligation in writing, binding the signatory to pay a sum certain upon the happening or failure of an event.

5. "Building" means any structure intended to have walls and a roof.

6. "Building official" means the person appointed by the City Manager and designated as the City's building official.

7. "Business" means any profession, trade, occupation and any other commercial enterprise conducted for monetary reward;

8. "Charter" means the Charter of the City of Piedmont;

9. "City" means the City of Piedmont, in the County of Canadian and State of Oklahoma;

10. "City limits" means within the city and includes not only the corporate limits of the city but also any property which it owns or which is under its jurisdiction;

11. "Clerk" means the city clerk;

12. "Council" means the governing body of the city, the city council;

13. "County" means Canadian County, Oklahoma;

14. "Definitions" given within a chapter or article apply only to words or phrases used in such chapter or article unless otherwise provided;

15. "Designee," following an official of the city, means the authorized agent, employee or representative of such official;

16. "Gender" Words importing the masculine gender include the feminine and neuter as well as the masculine;

17. "Health officer" means administrator of the cooperative department of the county and the city;

18. "Keeper" means one in possession of or who has the care, custody or superintendence of a thing, place or business whether or not the owner or proprietor, and includes any person, firm, association, corporation, club and copartnership whether acting by themselves or by a servant, agent or employee;

19. "Law" means applicable federal law and court decisions, court decisions and provisions of the constitution and statutes of the state, ordinances and charter of the city, and, when appropriate, any and all rules and regulations promulgated thereunder;

20. "Manager" see "Administrator";

21. "May" is permissive and discretionary;

22. "Mayor" means the mayor of the city;

23. "Month" means a calendar month;

24. "Number" Words used in the singular include the plural and the plural includes the singular;

25. "Oath" means any form of attestation by which a person signifies that he is bound

in conscience to perform an act or to speak faithfully and truthfully, and includes an affirmation or declaration in cases where by law an affirmation may be substituted for an oath;

26. "Occupant" means tenant or person in actual possession;

27. "Operate" means carry on, keep, conduct, maintain, manage, direct or superintend;

28. "Ordinances" mean the ordinances of the city and all amendments and supplements thereto;

29. "Owner" means one who has complete dominion over particular property and who is the one in whom legal or equitable title rests; when applied to a building or land, "owner" means any part owner, joint owner, owner of a community or partnership interest, life tenant, tenant in common, or joint tenant, of the whole or part of such building or land;

30. "Person" means any individual, natural person, joint stock company, partnership, voluntary association, club, firm, company, corporation, business trust, organization, or any other bodies corporate or politic or group acting as a unit, or the manager, lessee, agent, servant, partner, member, director, officer or employee of any of them including an executor, administrator, trustee, receiver, or other representative appointed according to law;

31. "Personal property" means any money, goods, movable chattels, things in action, evidence of debt, all objects and rights which are capable of ownership, and every other species of property except real property;

32. "Preceding" and "following" means next before and next after, respectively;

33. "Proprietor" means an owner of the property or premises, including any person, firm, association, corporation, club, partnership or other group acting as a unit, whether acting by themselves or by a servant, agent or employee;

34. "Public place" means and includes any public street, road or highway, alley, lane, sidewalk, crosswalk, or other public way, or any public resort, place of amusement, stadium, athletic field, park, playground, public building or grounds appurtenant thereto, school building or school grounds, public parking lot or any vacant lot, the elevator, lobby, halls, corridors and areas open to the public of any store, office, or apartment building, or any other place commonly open to the public;

35. "Real property" means land together with all things attached to the land so as to become a part thereof;

36. "Shall". The word "shall" is mandatory;

37. "Sidewalk" means that portion of a street between the curbline and the adjacent property along the margin of a street or other highway, designed, constructed and intended for the use of pedestrians to the exclusion of vehicles;

38. "Signature and subscription" means the name of a person, mark or symbol appended by him to a writing with intent to authenticate the instrument as one made or put into effect by him;

39. "State" means the State of Oklahoma;

40. "Statutes" means the Oklahoma Statutes as they are now or as they may be amended to be;

41. "Street" means all streets, highways, avenues, boulevards, parkways, roads, lanes, viaducts, bridges and the approaches thereto, docks built on the public street, alleys, courts, places, squares, curbs, sidewalks, recreation and park lands used for vehicular traffic, or other public ways or thoroughfares in this city, over which it has jurisdiction, which have been or may hereafter be dedicated and open to public use, or such other public property so designated in any law of this state;

42. "Tenant" means any person occupying the premises, building or land of another in subordination to such other person's title and with his express or implied assent, whether he occupies the whole or a part of those premises, building or land, whether alone or with others;

43. "Tense" Words used in the past or present tense include the future, past and present where applicable unless the context clearly indicates otherwise;

44. "Time" means the hour of the day according to the official time of the day;

45. "Time of performance" means the time within which an act is to be done as provided in any section or any order issued pursuant to any section, when expressed in days, and is computed by excluding the first and including the last day. If the last day is a Sunday or legal holiday, that day shall not be counted in the computation. When the time is expressed in hours, the whole of Sunday or a legal holiday from midnight to midnight is excluded;

46. "Treasurer" means the city treasurer;

47. "Watercourse" means any drain, ditch and stream, flowing in a definite direction or course in a bed with banks;

48. "Week" means seven (7) days;

49. "Writing" and "written" means any representation of words, letters or figures, whether by printing or otherwise, capable of comprehension by ordinary visual means; and

50. "Year" means a calendar year.

B. Words and phrases are construed according to the common and approved usage of the language, but technical words and phrases and others that have acquired a peculiar and appropriate meaning in the law are construed and understood according to such meaning. (Prior Code, Sec. 10-1 - 10-3, as amended)

SECTION 1-103 AUTHORITY OF CODE.

This code is a revision and codification of the general ordinances of the city which have been enacted and published in accordance with the authority granted in Sections 14-108 and 14-109 of Title 11 of the Oklahoma Statutes.

SECTION 1-104 CONFLICTING PROVISIONS.

A. If the provisions of different parts, chapters, articles, or sections of this Code conflict with or contravene each other, the provisions of each part, chapter, article, or section shall prevail as to all matters and questions growing out of the subject matter of this part, chapter, article, or section.

B. If clearly conflicting provisions are found in different sections of the same chapter, the provisions of this section last enacted shall prevail unless the construction is inconsistent with the meaning of that section.

C. Where any conflict exists between a part, chapter, article, or section of this code and any chapter or section of the Chapter, the latter shall prevail.

SECTION 1-105 REFERENCES INCLUDE AMENDMENTS; CONSTRUCTION.

Any reference in this code to an ordinance or provision of this code means such ordinance or provision as may now exist or is hereafter amended.

SECTION 106 CATCHLINES AND HEADNGS; CONSTRUCTION.

All designations and headings of parts, chapters, articles, and sect5ions are intended only for convenience in arrangement and as mere catchwords to indicate the content of such parts, chapters, articles, or sections whether printed in capital letters or bold face type. They shall not be deemed or taken to be any part or title of such parts, chapters, articles, or sections; nor, unless expressly so provided, shall they be so deemed upon amendment or reenactment; nor shall they be construed to govern, limit, modify, or in any other manner affect the scope, meaning, or intent of any of the provisions of this code.

SECTION 1-107 CODE PROVISIONS AS CONTINUANCE OF EXISTING ORDINANCES.

The provisions appearing in this code, insofar as they relate to the same subject manner and are substantially the same as those ordinance provisions previously adopted by the City and existing at the effective date of this code, shall be considered as restatement and continuations thereof and not as new enactments.

SECTION 1-108 PENALTY.

(A) Except as otherwise provided by state law, and except as provided in divisions (B) and (C) of this section, whenever in this code or in any ordinance of the City an act is prohibited or is made or declared to be unlawful, an offense or a misdemeanor, or whenever in the Code of Ordinances the doing of any act is required or

the failure to do any act is declared to be unlawful, where no specific penalty is provided therefore, the violation of any provision of this code or of any ordinance, upon conviction, shall be punished by a fine not exceeding $500.00, plus court costs. Each day or any portion of a day during which any violation of this code or of any ordinance shall continue shall constitute a separate offense.

(B) The following offenses under this code shall be punishable by a maximum fine of $750.00, imprisonment for a period not to exceed 60 days or both plus court costs:

OFFENSE

Assault and battery on a police officer
Prostitution
Pointing weapon at another
Assault and Battery
Contempt of court
Bogus checks
Minor in possession of low-point beer or alcohol (first offense $300.00, Second offense $600.00, and third offense $800.00) (NO IMPRISONMENT)

(C) The following offenses under this code shall be punishable by a fine of $800.00 and imprisonment for a period not to exceed 60 days or both plus court costs:

OFFENSE

Driving and actual physical control of a motor vehicle while under influence of Alcohol or drugs and driving while impaired.

Possession of controlled dangerous drugs and possession of drug paraphernalia

(D) $50.00 of each alcohol fine or deferral fee shall be transferred to a fund to be used to defray costs of enforcement of laws relating to juvenile access to alcohol, and alcohol and drug related offenses.

(E) The maximum fine or deferral fee for offenses relating to parking or speeding shall not exceed $200.00, plus court costs.

SECTION 1-109 EACH DAY OF VIOLATION OF CODE A SEPARATE OFFENSE.

Each day any person is in violation of any provision of this Code, and each day any such violation occurs or continues to exist, shall be a separate offense.

SECTION 1-110 PROHIBITED ACTS INCLUDE CAUSING, PERMITTING, CONCEALING.

Whenever in this Code any act or omission is made unlawful or prohibited, it shall include causing, allowing, permitting, aiding, abetting, or concealing the fact of such act or omission.

SECTION 1-111 CIVIL RELIEF FROM VIOLATIONS OF CODE OR ORDINANCES.

No penalty imposed by or pursuant to Section 1-108, or any other section of this Code, or other ordinance of the City shall interfere with the right of the City to apply to the proper courts of the State for a writ of mandamus, an injunction or other appropriate relief in the case of violations of this Code or other ordinances.

SECTION 1-112 TERRITORIAL APPLICABILITY.

Except as provided otherwise, this Code refers only to the commission or omission of acts within the territorial limits of the City and to that territory outside this City over which the City has jurisdiction, ownership, or control by virtue of any constitutional or Carter provision, or any law.

SECTION 1-113 ORDINANCES IN EFFECT IN OUTLYING TERRITORY OF CITY.

All ordinances of the City now in effect within the City are hereby extended to all real property belonging to, or under the control of the City outside the corporate limits of the City, and is in full effect therein, insofar as they are applicable. All ordinances of the City which shall go into effect in the future shall also apply to, and be in full effect within the boundaries of all outlying real property, insofar as they may be applicable. Any words in any ordinances indicating that the effect of an ordinance provision is limited to the corporate limits of the City shall be deemed to mean and include also the outlying real property belonging to, or under the control of the City, unless the context clearly indicates otherwise.

SECTION 1-114 CODE SEVERABILITY.

It is declared to be the intention of the Council that the sections, subsections, paragraphs, sentences, clauses, and words of this Code are severable. If any section, subsection, paragraph, sentence, clause, or word is declared unconstitutional or otherwise invalid by the judgment or decree of any court of competent jurisdiction, its unconstitutionality or invalidity shall not affect the validity of any of the remaining sections, subsections, paragraphs, sentences, clauses, and

words of this Code since the sections or parts of sections would have been enacted by the Council without and irrespective of any unconstitutional or otherwise invalid section, subsection, paragraph, sentence, clause, or word being incorporated into this Code. (Prior Code, Sec. 1-13)

CHAPTER 2

STANDARD RULES: NOTICES, WARRANTS, INSPECTIONS, FEES, BONDS

Section 1-201	Acts by deputy or designee.
Section 1-202	Notices; service and proof.
Section 1-203	Inspections and right of entry.
Section 1-204	Search warrant or access warrant.
Section 1-205	Schedule of fees and charges created.

SECTION 1-201 ACTS BY DEPUTY OR DESIGNEE.

Whenever a power is granted to or a duty is imposed upon a public officer or employee, the power may be performed by an authorized deputy or designee or by any person authorized pursuant to law or ordinances, unless this code expressly provides otherwise.

SECTION 1-202 NOTICES; SERVICE AND PROOF.

A. Unless otherwise specifically provided in this code or applicable law, whenever a notice is required to be given pursuant to any section of this code, such notice shall be given either by personal delivery to the person to be notified or by deposit in the United States mail in a sealed envelope, postage prepaid, addressed to the person to be notified at his last-known business or residence address as the same appears in applicable city records or other records pertaining to the matter for which such notice is served, or by any other method of delivery approved by law. Service by mail shall be deemed to have been completed at the time of deposit in the post office or any United States mailbox.

B. Unless otherwise specifically provided, proof of giving any notice may be made by the certificate of any officer or employee of this city or by affidavit of any person over the age of eighteen (18) years who actually accomplished personal service in conformity with this code or other provisions of law applicable to the subject matter concerned, or by a return receipt signed by the recipient notified by United States mail.

SECTION 1-203 INSPECTIONS AND RIGHT OF ENTRY.

A. To enforce the provisions of this code, the city administrator or his designee or any other person designated by this code or otherwise shall have a right of entry on premises for inspection purposes in the manner and to the extent as may be authorized by applicable law. This right of entry shall be a condition of any permit, license, grant or any utility service with or provided by the city. For the purpose of this section, inspection includes records and papers on the premises or of the permittee, licensee, grantee or customer relating to the permit, license, grant or service.

B. Emergency inspections may be authorized if the city administrator or his designated representative has reason to believe that a condition exists which poses an immediate threat to life, health or safety. Such procedure shall take place in accordance with applicable law.

C. Where the city administrator or other designated representative is otherwise impeded or prevented by the owner, occupant or operator from conducting an inspection of the premises,

such person shall be in violation of this section.

SECTION 1-204 SEARCH WARRANT OR ACCESS WARRANT.

A. Any officer designated by the city to inspect a premises may, upon affidavit, apply to the judge of competent jurisdiction for a search warrant setting forth factually the actual conditions and circumstances that provide a reasonable basis for believing that a nuisance or violation of this code may exist, including one or more of the following:

1. That the premises or records require inspection according to the cycle established by the inspecting officer for periodic inspections of records, buildings or premises of the type involved; or

2. That observation of external conditions of the premises and its public areas has resulted in the belief that violations of this code exist.

B. If the judge of competent jurisdiction is satisfied as to the matters set forth in the affidavit, he shall authorize the issuance of a search warrant permitting access to and inspection of that part of the premises on which the nuisance or violation may exist.

SECTION 1-205 SCHEDULE OF FEES AND CHARGES CREATED.

A. There is hereby created a schedule of fees and charges, which shall contain those fees and charges for the various licenses, permits and other fees and charges as designated by the council. Where a fee or charge is authorized to be collected by the city in any ordinance the amount of the fee or charge shall be set by resolution or motion and entered into the schedule of fees and charges. The schedule shall be kept on file in the office of the clerk, to whom all fees and charges shall be paid unless otherwise provided. A copy may be obtained upon payment of a fee as set forth in the schedule of fees and charges.

B. The schedule of fees and charges hereby created shall also be known and may be cited as the fee schedule.

Cross Reference: See fee schedule, Appendix 1 of this code.

CHAPTER 3

CORPORATE AND WARD LIMITS

Section 1-301 Maps of the City

Section 1-302 Ward boundaries.

SECTION 1-301 MAP OF THE CITY.

The map of the city showing its territorial limits, as maintained in the office of the city clerk, is hereby designated as the official map of the city, and the corporate limits as shown thereon, and as amended, are declared to be true and correct corporate limits of the city, including all annexations made to the city through and including the date of October 1, 1993.

SECTION 1-302 WARD BOUNDARIES.

The five wards of the City as established by Section 6-3 of the Charter of The City of Piedmont are hereby amended and established as shown on the map attached hereto as Exhibit "A" and a written description attached hereto as Exhibit "B". The map and written description shall be included in the Piedmont Code of Ordinances. The City Clerk is hereby directed to forthwith deliver a copy of the ward map and written description to the Election Boards of Canadian and Kingfisher Counties.

State Law Reference: Review of wards after each federal census, 11 O.S. 20-101; changing wards, 11 O.S. 20-102 to 20-105.

Charter Reference: Division into wards, number, etc., Sec.6-3 of the charter.

Ed.Note: See page 1-15 for copy of the Ward Map of the City.

(This page intentionally left blank)

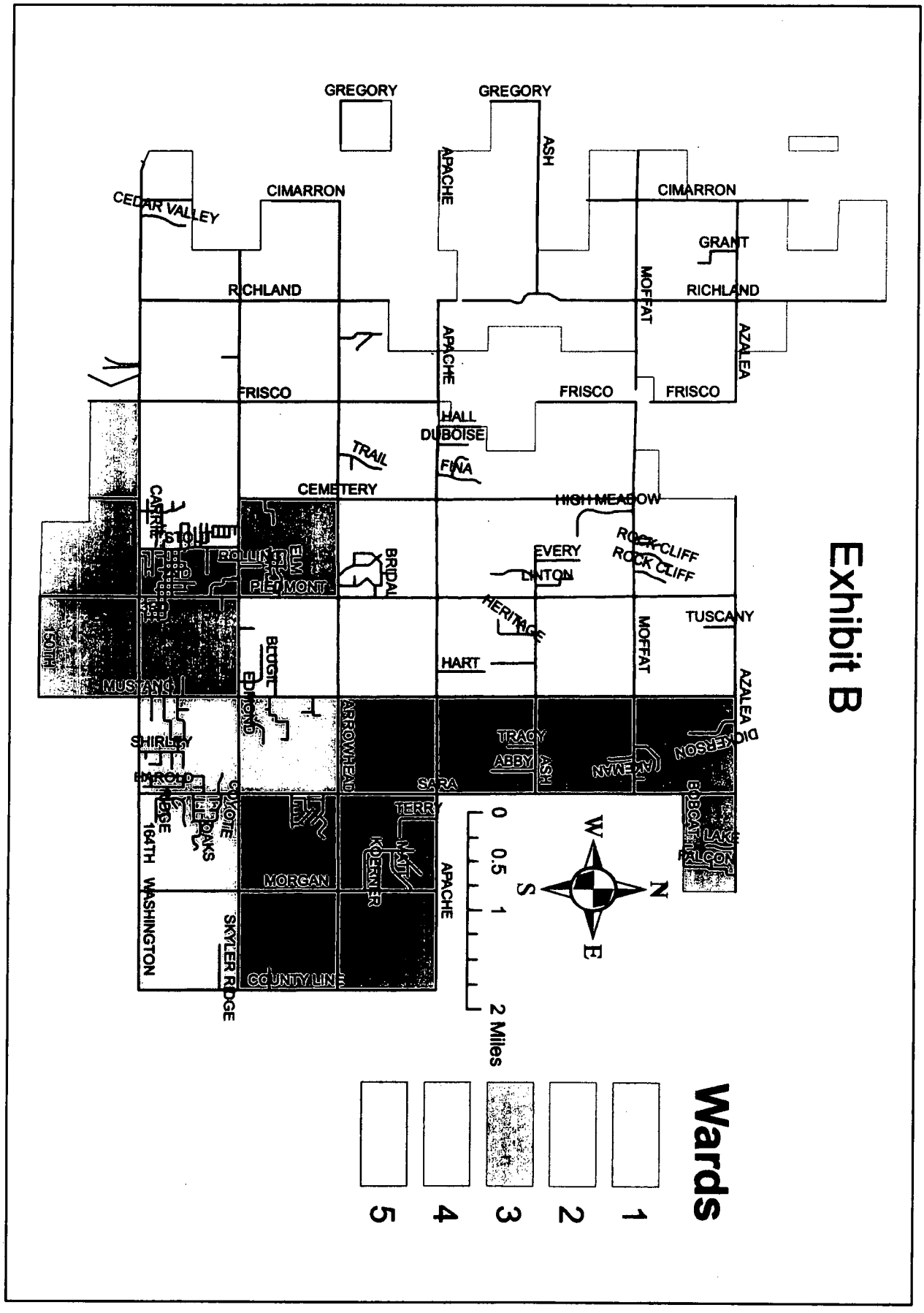
Exhibit B
GREGORY
GREGORY
CIMARRON
CIMARRON
CEDAR VALLEY
APACHE
ASH
GRANT
RICHLAND
RICHLAND
MOFFAT
AZALEA
APACHE
FRISCO
FRISCO
FRISCO
HALL
DUBOISE
TRAIL
FINA
CEMETERY
HIGH MEADOW
ROCKCLIFF
ROCK CLIFF
EVERY
LINTON
BRIDAL
ELM
PIEDMONT
HERITAGE
TUSCANY
MOFFAT
HART
BLOUIT
MUSTANG
AZALEA
DICKERSON
TRACY
ABBY
ASH
ARROWHEAD
SARA
SHIRLEY
BARROD
COYOTE
TERRY
KOERNER
APACHE
MORGAN
164TH
WASHINGTON
SKYLER RIDGE
COUNTY LINE
0
0.5
1
2 Miles
W
S
N
E
Wards
1
2
3
4
5

EXHIBIT A

Ward 1 - Beginning from the intersection of Cemetery Road NW and Arrowhead NW, thence east to Piedmont Road N, thence south to Edmond Road NE, thence east to Mustang Road NE, thence south to Arkansas (or 150th), thence west one mile & approximately 3,956 feet to city limit border, thence north approximately 2,513 feet to city limit border, thence west to Frisco Road, thence north to Washington Avenue W, thence east to Stout Drive NW, thence north to Edmond Road, thence west to Cemetery Road NW, thence north to the point of beginning.

Ward 2 - Beginning from the intersection of Mustang Road NE and Azalea NE, thence south to Edmond Road NE, thence west to Piedmont Road N, thence north to Arrowhead NW, thence west to Cemetery Road NW, thence north to Apache NW, thence west approximately 3,960 feet to city limit border, thence north approximately 2,640 feet to city limit border, thence east approximately 1,320 feet to city limit border, thence north approximately 2,640 feet to city limit border, thence west to Frisco Road NW, thence north to Moffat Road NW, thence east approximately 2,640 feet to city limit border, thence north approximately 1,320 feet to city limit border, thence east approximately 2,640 feet to city limit border, thence north to Azalea NW, thence east to the point of beginning; and

Beginning from the intersection of Apache NW and Frisco NW, thence north approximately 641 feet to city limit border, thence east approximately 992 feet to city limit border, thence south approximately 649 feet to city limit border, thence west to the point of beginning; and

Beginning from the intersection of Azalea NW and Frisco NW, thence south approximately 4,290 feet to city limit border, thence west approximately 1,320 feet to city limit border, thence south to Moffat Road NW, thence west approximately 1,320 feet to city border, thence south approximately 3,960 feet to city border, thence west approximately 1,320 feet to city border, thence south approximately 3,967 feet to city border, thence east approximately 1,312 feet to city border, thence south to Apache NW, thence west to Richland Road NW, thence north approximately 1,325 feet to city border, thence west approximately 2,640 feet to city border, thence south to Apache NW, thence west approximately 5,280 feet to city border, thence north approximately 2,640 feet to city border, thence west to Gregory Road, thence North to Ash NW, thence east approximately 7,920 feet to city border, thence north approximately 2,640 feet to city border, thence west approximately 5,280 feet to city border, thence north approximately 5,280 to city border, thence east to Cimarron Road NW, thence north approximately 5,280 feet to city border, thence east approximately 2,640 feet to city border, thence north approximately 2,640 feet to city border, thence west to Cimarron Road NW, thence north approximately 2,640 feet to city border, thence east to Richland Road NW, thence south approximately 5,280 feet to city border, thence east approximately 2,640 feet to city border, thence south to Azalea NW, thence east to the point of beginning; and

Beginning at a point approximately 5,280 feet north of the intersection of Azalea NW and Cimarron Road and approximately 2,640 feet west to the city border, thence west approximately 980 feet to city border, thence south approximately 2,640 feet to city border, thence east approximately 980 feet to city border, thence north to the point of beginning.

Ward 3 - Beginning from the intersection of Mustang Road NE and Azalea NE, thence east approximately two miles to city limit border, thence south approximately 2,640 feet to city limit border, thence west to Sara Road NE, thence south to Apache NE, thence east to County Line Road, thence south to Edmond Road NE, thence west to Sara Road NE, thence north to Arrowhead NE, thence west to Mustang Road, thence north to the point of beginning.

Ward 4 — Beginning from the intersection of Arrowhead NE and Mustang Road NE, thence east to Sara Road NE, thence south to Edmond Road NE, thence east to County Line Road, thence south to Washington Avenue E., thence west to Mustang Road NE, thence north to the point of beginning.

Ward 5 — Beginning from the intersection of Apache Road NW and Cemetery Road NW, thence south to Edmond Road NW, thence east to Stout Drive NW, thence south to Washington Avenue W, thence west three miles and approximately 5,395 feet to city limit border, thence north approximately 2,264 feet to city limit border, thence east approximately 5,280 feet to city limit border, thence north approximately 3,697 feet to city limit border, thence west to Cimarron Road NW, thence north to Arrowhead NW, thence east to Richland Road NW, thence north approximately 2,640 feet to city limit border, thence east approximately 2,640 feet to city limit border, thence north to Apache Road NW, thence east to the point of beginning; and

The southwest quarter of Section 22, Township 14 North, Range 6 West. Generally located on the northeast corner of the intersection of Gregory Road NW and Arrowhead.

PART 2

ADMINISTRATION AND GOVERNMENT

CHAPTER 1

GOVERNMENT ORGANIZATION

Section 2-101	Form of government.
Section 2-102	Meetings of the council.
Section 2-103	Mayor's powers and duties, vice mayor.
Section 2-104	City administrator appointment by council; powers and duties.
Section 2-105	City clerk appointment; duties.
Section 2-106	City treasurer appointment; duties.
Section 2-107	City attorney.
Section 2-108	Administrative departments, officers, and agencies.
Section 2-109	Bonds for city officers and employees.
Section 2-110	Compensation of mayor and council.
Section 2-111	Books delivered to successor.
Section 2-112	Personnel board established.
Section 2-113	Personnel regulations adopted.
Section 2-114	Absences to terminate certain positions.
Section 2-115	Absentee ballots.

CHAPTER 2

RETIREMENT AND PENSIONS

ARTICLE A

SOCIAL SECURITY

Section 2-201	City officers and employees under federal social security.

ARTICLE B

FIRE FIGHTERS PENSION AND RETIREMENT SYSTEM

Section 2-211	System created.
Section 2-212	System to be operated in accordance with law.

ARTICLE C

POLICE PENSION AND RETIREMENT SYSTEM

Section 2-221	System created.
Section 2-222	System to be operated in accordance with law.

CHAPTER 3

CITY RECORDS

Section 2-301	Citation.
Section 2-302	Purpose.
Section 2-303	Definitions.
Section 2-304	Open records.
Section 2-305	Fees.
Section 2-306	Custodians of records.
Section 2-307	Confidential personnel records.

CHAPTER 4

PERSONNEL REGULATIONS

Section 2-401	General provisions.
Section 2-402	Classification plan.
Section 2-403	Pay plan.
Section 2-404	Recruitment and employment.
Section 2-405	Examinations.
Section 2-406	Appointment, Transfers, Demotions, Re-employment.
Section 2-407	Probation.
Section 2-408	Separation and disciplinary action.
Section 2-409	Grievances.
Section 2-410	Leaves of absence.
Section 2-411	Conduct of employees.
Section 2-412	Training and development.

CHAPTER 1

GOVERNMENT ORGANIZATION

Section 2-101	Form of government.
Section 2-102	Meetings of the council.
Section 2-103	Mayor's powers and duties, vice mayor.
Section 2-104	City administrator appointment by council; powers and duties.
Section 2-105	City clerk appointment; duties.
Section 2-106	City treasurer appointment; duties.
Section 2-107	City attorney.
Section 2-108	Administrative departments, officers, and agencies.
Section 2-109	Bonds for city officers and employees.
Section 2-110	Compensation of mayor and council.
Section 2-111	Books delivered to successor.
Section 2-112	Personnel board established.
Section 2-113	Personnel regulations adopted.
Section 2-114	Absences to terminate certain positions.
Section 2-115	Absentee ballots.

SECTION 2-101 FORM OF GOVERNMENT.

The city is governed under the council-city administrator form of government. All powers of the city shall be exercised in the manner prescribed by the city charter, by the city code, by state statute and in such manner prescribed by ordinances adopted by the city council, only if not in conflict with the city charter.

Charter Reference: Similar provisions, Section 1-2 of the charter.

SECTION 2-102 MEETINGS OF THE COUNCIL.

A. Regular meetings of the council shall be held at least once every month in council chambers at city hall unless the council designates another place. Any adjourned meeting may be held at any other place in the city designated by the council.

B. The council may from time to time adopt rules to govern the proceedings of the council. (Prior Code, Secs. 1-3, 1-4)

State Law Reference: See also Open Meetings Act, 25 O.S. Sec. 301 et seq.

Charter Reference: Council Composition, see Sec. 2-1 of the charter; council meetings, Sec. 2-8 of the charter, rules, quorum and roll call, Sec. 2-12 of the charter.

SECTION 2-103 MAYOR'S POWERS AND DUTIES, VICE MAYOR.

The mayor and vice mayor shall have all the powers and duties prescribed by the charter, and state law, and as may be prescribed by ordinance.

Charter Reference: See Section 2-2, 2-3 of the charter on mayor, vice mayor powers.

SECTION 2-104 CITY ADMINISTRATOR APPOINTMENT BY COUNCIL, POWERS AND DUTIES.

The city administrator shall be appointed by the city council and shall be the administrative officer and head the administrative branch of the city government and shall exercise the powers and duties granted him by the city charter.

Charter Reference: See Secs. 3-1 to 3-3 of the city charter on city administrator.

SECTION 2-105 CITY CLERK APPOINTMENT, DUTIES.

The city clerk is an officer of the city, appointed as provided in the charter. The city clerk shall be head of the department of finance. The city clerk shall collect or receive all revenue and other monies of the city and shall deposit same with the city treasurer. The city clerk shall be the clerical officer of the council and shall perform such other duties as provided by law, by ordinance, or by the council. The same person may hold the offices of city clerk and city treasurer.

Charter Reference: See Sec. 4-1 of the charter for city clerk duties.

SECTION 2-106 CITY TREASURER APPOINTMENT, DUTIES.

The city treasurer is an officer of the city, appointed as provided in the charter. The treasurer shall deposit daily all funds coming into his hands for the city in such depositories as the council may designate, and shall disburse such funds in the manner provided by applicable laws or ordinances. He shall have such other powers, duties and functions as may be prescribed by the charter, by applicable law or by ordinance. The same person may hold the offices of city clerk and city treasurer.

Charter Reference: See Sec 4-2 of the charter for city treasurer duties.

SECTION 2-107 CITY ATTORNEY.

The city attorney is an officer of the city, appointed as provided in the city charter. The city attorney shall attend council meetings, prepare ordinances and resolutions when directed, advise the council and administrator and, with council approval, advise other officers of the city, represent the city in lawsuits and perform such other duties as provided by law or ordinance.

Charter Reference: See Sec. 5-1 of the city charter on city attorney duties.

SECTION 2-108 ADMINISTRATIVE DEPARTMENTS, OFFICERS AND AGENCIES.

There shall be such other administrative departments, agencies and officers as the council may establish.

Charter Reference: Similar provisions, Sec. 3-4 of the charter.

SECTION 2-109 BONDS FOR CITY OFFICERS AND EMPLOYEES.

The city administrator, the clerk, the treasurer and such officers and employees as are designated by the city council shall, before entering upon the discharge of their duties, execute and file with the city clerk surety bonds issued by a surety company authorized to operate in the state

conditioned upon the faithful performance of their duties. The city shall pay the premium on such bonds.

Charter Reference: Similar provisions, Sec. 8-7 of the charter.

SECTION 2-110 COMPENSATION OF MAYOR AND COUNCIL.

Compensation of elected officers of the city shall be as provided by the charter and ordinances of the city.

Charter Reference: Similar provisions, Sec. 2-4 of the charter.

Ed. Note: Ord. No. 213, 4/22/85, set compensation for council members at $25.00 per month effective 5/1/87.

SECTION 2-111 BOOKS DELIVERED TO SUCCESSOR.

All books, vouchers, monies or other property belonging to the corporation in charge or possession of any officer of the same shall be delivered to his successor when qualified.

SECTION 2-112 PERSONNEL BOARD ESTABLISHED.

The personnel board of the city shall consist of three (3) members appointed as provided in the city charter. The personnel board shall have such powers and duties as established by the charter.

Charter Reference: Similar provisions, Sec. 8-2 to 8-4 of the charter.

SECTION 2-113 PERSONNEL REGULATIONS ADOPTED.

The city's personnel regulations, as adopted by Ordinance No. 265 on July 25, 1985, and as may be amended from time to time by the city, shall govern personnel matters. (Ord. No. 265, 7/25/85)

SECTION 2-114 ABSENCES TO TERMINATE CERTAIN POSITIONS.

If any member of a board or commission of the city shall be absent from more than one-half (1/2) of the meetings of the board or commission, regular or special, held within any period of four (4) consecutive calendar months, he shall cease to hold office effective with the entering of a certificate of such absence in the official records of the city by the city clerk. The city council may, in its sole discretion, waive the provisions of this section only where the absences are due to illness of the member of the board or commission. (Prior Code, Sec. 1-55.1)

SECTION 2-115 ABSENTEE BALLOTS.

In all municipal elections in the city, absentee ballots are hereby authorized in accordance with applicable state law. The county election board of Canadian County is hereby authorized and directed to prepare and distribute such absentee ballots as may be authorized under applicable state law. (Ord. No. 293, 6/24/91)

CHAPTER 2

RETIREMENT AND PENSIONS

ARTICLE A

SOCIAL SECURITY

Section 2-201 City officers and employees under federal social security.

ARTICLE B

FIRE FIGHTERS PENSION AND RETIREMENT SYSTEM

Section 2-211 System created.
Section 2-212 System to be operated in accordance with law.

ARTICLE C

POLICE PENSION AND RETIREMENT SYSTEM

Section 2-221 System created.
Section 2-222 System to be operated in accordance with law.

ARTICLE A

SOCIAL SECURITY

SECTION 2-201 CITY OFFICERS AND EMPLOYEES UNDER FEDERAL SOCIAL SECURITY.

A. It is hereby declared to be the policy of the city to extend, at the earliest date, to the employees and officials thereof, not excluded by law or this section, and whether employed in connection with a governmental or proprietary function, the benefits of the system of federal old-age and survivors insurance as authorized by the Federal Social Security Act, and amendments thereto. In pursuance of this policy, the city shall take such action as may be required by applicable state or federal laws or regulations.

B. The mayor is hereby authorized and directed to execute all necessary agreements and amendments thereto with the State Department of Human Services as agent or agency, to secure coverage of employees and officials as provided in Subsection A hereof.

C. Withholdings from salaries or wages of employees and officials for the purpose provided in Subsection A hereof are hereby authorized to be made in the amounts and at such times as may be required by applicable state or federal laws or regulations, and shall be paid over to the state or federal agency designated by the laws or regulations.

D. There shall be appropriated from available funds such amounts at such times as may be required by applicable state or federal laws or regulations for employer's contributions, which shall be paid over to the state or federal agency designated by said laws or regulations.

E. The city shall keep such records and make such reports as may be required by applicable state or federal laws or regulations.

F. There is hereby excluded from this section any authority to make any agreement with respect to any position or any employee or official now covered or authorized to be covered by any other ordinance creating any retirement system for any employee or official of the city.

G. There is hereby excluded from this section any authority to make an agreement with respect to any position or any employee or official, compensation for which is on a fee basis, or any position or any employee or official not authorized to be covered by applicable state or federal laws or regulations.

ARTICLE B

FIRE FIGHTERS PENSION AND RETIREMENT SYSTEM

SECTION 2-211 SYSTEM CREATED.

There is hereby created, for the purpose of providing pension retirement allowance and other benefits for fire fighters of the city, a fire fighters pension and retirement system. It is declared to be the official policy of the city to participate in the pension system as provided by state law. (Prior Code, Sec. 1-52)

State Law Reference: Firefighter's pension system, 11 O.S. Secs. 49-101 et seq.

SECTION 2-212 SYSTEM TO BE OPERATED IN ACCORDANCE WITH LAW.

A. The fire fighters pension and retirement system as established by Sections 49-100.1 et seq. of Title 11 of the Oklahoma Statutes is hereby adopted by reference.

B. The local board of trustees of the fire fighters pension and retirement system, servicing the fire fighters of the city, shall be constituted as provided by state law and shall have the powers and duties prescribed thereby. (Prior Code, Secs. 1-57, 1-58, in part)

ARTICLE C

POLICE PENSION AND RETIREMENT SYSTEM

SECTION 2-221 SYSTEM CREATED.

There is hereby created, for the purpose of providing pension retirement allowance and other benefits for police officers of the city, a police pension and retirement system. It is declared

to be the official policy of the city to participate in the pension system as provided by state law. (Prior Code, Sec. 1-59, in part)

State Law Reference: Police pension system, 11 O.S. Secs. 50-100.1 et seq.

SECTION 2-222 SYSTEM TO BE OPERATED IN ACCORDANCE WITH LAW.

A. The police pension and retirement system as established by Sections 50-100.1 et seq. of Title 11 of the Oklahoma Statutes is hereby adopted by reference.

B. The local board of trustees of the police pension and retirement system shall be constituted as provided by state law and shall have the powers and duties prescribed thereby. (Prior Code, Secs. 1-60 to 1-62, as amended)

CHAPTER 3

CITY RECORDS

Section 2-301 Citation.
Section 2-302 Purpose.
Section 2-303 Definitions.
Section 2-304 Open records.
Section 2-305 Fees.
Section 2-306 Custodians of records.
Section 2-307 Confidential personnel records.

SECTION 2-301 CITATION.

This chapter shall be known as the city Public Records Act. (Ord. No. 290, 3/25/91)

SECTION 2-302 PURPOSE.

It is the purpose of this chapter to establish reasonable fees and charges for the provision of access to or copies of open public records in the possession of the city to avoid the necessity of using general public funds of the city to subsidize special services and benefits to a record requester. (Ord. No. 290, 3/25/91)

SECTION 2-303 DEFINITIONS.

As used herein, the terms "record", "public body", "public office", "public official", and "law enforcement agency" shall carry the same meaning as those terms or words are defined in the state statutes. (Ord. No. 290, 3/25/91)

SECTION 2-304 OPEN RECORDS.

All records of the city required to be available for inspection by the state Open Records act shall be open to any person for inspection, copying or mechanical reproduction during regular business hours; provided that this chapter does not apply to records specifically required by law to be kept confidential, including, but not limited to:

1. Records not discoverable or not public or open records under state or federal law;

2. Records protected by an evidentiary privilege such as the identity of informer privileges, etc.;

3. Records of what transpired during meetings of the city council of the city during executive sessions authorized under the state Open Meetings Act; or

4. Such other records as would upon release or inspection by third parties constitute an invasion of privacy of a particular person or entity.

Nothing herein shall be construed as requiring the city to maintain any records nor shall the city be required to maintain any particular system for filing or indexing records. (Ord. No. 290, 3/25/91)

SECTION 2-305 FEES.

A. A reasonable fee for the recovery of the cost of document copying or mechanical reproduction shall be charged. In those instances where the request is made solely for commercial purposes or clearly would cause excessive disruption of essential functions of any department, then, and in that event, a fee shall also be assessed to recover the direct cost of document search. A schedule of the fees to be charged for the document copying and document search shall be as set by the city by motion or resolution for law enforcement records and other municipal records. Such fees shall be posted with the city clerk of the city and with the county clerk of the county. In no case shall a search fee be charged when the release of the documents is made to the news media, scholars, authors and taxpayers seeking to determine whether those entrusted with the affairs of the city are honestly, faithfully and competently performing their duties; however the actual cost of photocopying may be charged.

B. Any person who attempts to avoid the fees established for copying, reproduction or search by falsely claiming to be exempt as set out herein shall be guilty of a misdemeanor. (Ord. No. 290, 3/25/91)

SECTION 2-306 CUSTODIANS OF RECORDS.

A. The following city officers are hereby designated as official custodians of the records of the city:

1. City clerk/city treasurer;

2. City administrator;

3. City attorney;

4. City payroll clerk;

5. Fire chief;

6. Police chief;

7. Court clerk; and

8. Utilities clerk.

Each of the official custodians appointed herein are hereby authorized to designate any subordinate officers or employees to serve as record custodians of their office or department.

B. All members of the public in seeking access to or copies of a public record in accordance with the provisions of this chapter shall address their request to the custodian charged with the responsibility for the maintenance of the records sought to be inspected or copied.

C. Whenever any city officer, employee appointed or designated as a custodian under this section is presented with a request for access to or a copy of a public record which record the custodian does not have in his possession and for which he has not ben given the responsibility to keep and maintain, the custodian shall so advise the person requesting the record. (Ord. No. 290, 3/25/91)

SECTION 2-307 CONFIDENTIAL PERSONNEL RECORDS.

The following personnel records of city employees are considered confidential and are not subject to public inspection:

1. Those personnel records which relate to internal personnel investigations, including examination and selection material for employment, hiring, appointment, promotion, demotion, discipline or resignation; or

2. Such personnel records which, if disclosed, would constitute a clearly unwarranted invasion of personal privacy such as employee evaluations, payroll deductions, or employment applications submitted by persons not hired by the city.

(Ord. No. 290, 3/25/91)

CHAPTER 4

PERSONNEL REGULATIONS

Section 2-401	General provisions.
Section 2-402	Classification plan.
Section 2-403	Pay plan.
Section 2-404	Recruitment and employment.
Section 2-405	Examinations.
Section 2-406	Appointment, Transfers, Demotions, Re-employment.
Section 2-407	Probation.
Section 2-408	Separation and disciplinary action.
Section 2-409	Grievances.
Section 2-410	Leaves of absence.
Section 2-411	Conduct of employees.
Section 2-412	Training and development.

SECTION 2-401 GENERAL PROVISION

1. PURPOSE.

In accordance with the provisions of Section 8-1, Charter of the City of Piedmont, Oklahoma, which provides that the City Council may regulate personnel matters and provide for personnel administration, this system is established.

It is the purpose of these rules to set forth the principles to establish normal procedures which will serve as a guide to administrative action concerning the various personnel activities and transactions.

Employment shall be based on merit, fitness, and equitable incentives free of personal consideration in order to establish, maintain, and promote efficiency and economy in municipal government.

2. POSITIONS COVERED.

All officers and employees of the City shall be divided into the classified and the unclassified service.

The following shall constitute the unclassified service:

(a) The Mayor and other councilmembers, the Municipal Judge or Judges, and the City Clerk and the City Treasurer when appointed by the Council.

(b) The City Manager, one Assistant City Manager, if any, the principal secretary to the City Manager, if any, and the City Attorney.

(c) Members and secretary of each board, commission, or other plural authority.

(d) All personnel who serve without compensation, except volunteer firefighter and reserve police officers.

(e) All temporary and all part-time officers and employees, except those whom the Council may place in the classified service by ordinance or personnel rules.

All other officers and employees shall be in the classified service. Nothing herein shall prohibit including unclassified personnel in the classification plan for pay purposes.

3. ADMINISTATION.

These rules shall be administered by the City Manager, under the direction of the City Council and in conformity with these rules.

SECTION 2-402 CLASSIFICATION PLAN.

1. PURPOSE.

The classification plan provides a complete inventory of all positions in the municipal service and an accurate description and specification for each class of the employment. The plan standardizes titles each of which has an indicative meaning throughout the classified service.

2. COMPOSITION OF THE CLASSIFICATION PLAN.

(a) A grouping in classes of positions which are approximately equal in difficulty and responsibility, which call for the same general qualifications and which can be equitably compensated within the same range of pay, under similar working conditions.

(b) Class titles – Descriptive of the work of the class which identify each class.

(c) Written Class Specifications for each class of positions containing a description of the nature of work and of the relative responsibility of the positions in the class, requirements in terms of knowledge, abilities and skills necessary for performance

of the work and a statement of experience and training desirable for recruitment into the class.

3. USE OF CLASS TITLES.

No person will be appointed to or employed in a position in the classified service under a title not included in the classification plan and budgeted from the appropriate fund.

4. USE OF CLASS SPECIFICATIONS.

Specifications are deemed to be descriptive and explanatory of the work performed and not necessarily inclusive of all duties performed.

5. USE OF THE CLASSIFICATION PLAN.

The classification plan is to be used:

(a) As a guide in recruiting and examining candidates for employment.

(b) In determining line of promotion and in developing employee training programs.

(c) In determining salary to be paid for various types of work.

(d) In providing uniform job terminology, understandable by all City officials and employees, and by the general public.

6. ADMINISTRATION OF THE CLASSIFICATION PLAN.

The City Manager is charged with the maintenance of the classification plan so it will reflect the duties performed by each employee in the classified service, in a class to which each position is allocated. It is his duty to examine the nature of the positions as they are created and to allocate them to the existing class or to create new classes in conformity with this rule; to make such changes in the classification plan as are necessary by changes in the duties and responsibilities of existing positions, and to review the entire classification plan and recommend appropriate changes.

7. ALLOCATION OF POSITIONS.

Whenever a new position is established, or the duties of an old position change, department supervisors shall submit in writing a comprehensive job description, describing in detail the duties of such position. The City Manager shall then establish the appropriate class allocation or create a new class.

SECTION 2-403 PAY PLAN.

1. COMPENSATION.

The compensation plan includes the basic salary schedule as adopted by the City Council by resolution and all subsequent amendments, and the schedule in salary ranges consisting of minimum and maximum rates of pay and intermediate steps for all classes of positions included in the classification plan as adopted by the City Council by resolution and all subsequent amendments.

2. MAINTENANCE OF THE COMPENSATION PLAN.

The compensation plan is intended to provide fair compensation for all classes in the classification plan with regard to range of pay for other classes, general rates of pay for similar employment in private establishments and other public jurisdiction in the area, the cost of living data, the financial condition of the City, and other factors as determined by the City Manager.

The City Manager will, from time to time, make comparative studies of all factors affecting the level of salary ranges, and will recommend such changes in salary range as appear to be needed. A yearly adjustment in the compensation plan as outlined in the Cost of Living Index as published by the Bureau of Labor Statistics, with approval of and at the discretion of the City Council, may be given to all personnel.

3. THE USE OF SALARY RANGES

Salary ranges are intended to furnish administrative flexibility in recognizing individual differences among positions allocated to the same class providing employee incentive, and in rewarding employees for their meritorious service.

The following procedures will be followed in the granting of movement within the range increases:

STEP 1: The minimum rate established for the class is the normal hiring rate except in those cases where usual circumstances appear to warrant the appointment of an employee at a higher rate. Appointment above the minimum step rate may be made when the City Manager determines it is in the best interest of the City. Approval will be based on qualifications of the applicant being in excess of the requirements for the class; that there is a shortage of qualified applicants available at the minimum step, and that qualified applicants decline employment at the minimum step.

STEP 2: Upon successful completion of the probationary period, employees will be automatically advanced to the second step.

STEP 3: On the first anniversary of employment, at the end of the probationary period (normally a total of 18 months), the department supervisor will consider various factors affecting the performance of employees and may recommend advancement to the third step. The third step in considered to be the normal rate for the class adequate to compensate for satisfactory service of the employee.

If an individual is eligible to be recommended for a merit step increase and is submitted by their department supervisor without recommendation and disapproved by the City Manager, the individual will not be eligible for reconsideration until ninety (90) days have passed.

An employee who holds a permanent appointment may be considered for a further merit pay step increase when the following requirement has been fulfilled:

4. LONGEVITY PAY.

In addition to the compensation provided in the pay plan eligible employees shall receive longevity pay as follows:

(a) Five through nine consecutive years, $35.00 per month.

(b) Ten or more consecutive years, $60.00 per month.

5. PAY RATES AND PROMOTION, DEMOTION, TRANSFER, OR RECLASSIFICATION.

When an employee is promoted, demoted, transferred, or reclassified the rate of pay in the new position shall be established in accordance with the following:

(a) When an employee is reclassified to a new grade, they shall be advanced to a step in the new grade equivalent to one step rang higher than the step promoted from, but no employee being reclassified shall be in a pay grade and step less than employees under their supervision.

(b) When a regular employee is demoted to a position in a lower range the employee's salary shall be set at the same step range as previously held; or if the employee is demoted within the same range, the employee's salary shall be set no lower than one step rate below their current step rate

(c) When an employee is transferred from the position of one class to the position of another class at the same level, the employee should continue to be paid at the same step rate.

6. HOURLY RATES.

Certain employees may be paid on an hourly rate basis, as established by the City Manager. Such employees will receive pat at straight time for maximum of a forty (40) hour week. No overtime work, pay, or compensatory time off will be allowed except where authorized by the City Manager.

7. PAY CHECKS.

Payroll checks are written bi-weekly and distributed on alternate Fridays. If the normal pay day falls on a holiday, payroll checks will be distributed on the last normal work day prior to the holiday. No exceptions will be made to this rule unless approved by the City Manager.

SECTION 2-404 RECRUITMENT AND EMPLOYMENT.

1. ELIGIBILITY.

Individuals shall be recruited from a geographic area as wide as necessary to assure obtaining well qualified candidates for the various types of positions. Employment shall not necessarily be limited to residents of Piedmont; however, in cases where residents and non-residents are equally qualified for particular vacancies, the resident shall receive first consideration in filling such vacancies. Employees may reside within any geographical area but must be able to respond within thirty minutes to emergency call backs.

2. NOTIFICATION.

The City Manager shall prepare recruiting notices to publicize vacancies and to provide candidates for vacant positions. Such various media or publicity shall be used as might be expected to bring notice of vacancies to as many qualified persons as possible.

3. ACCEPTANCE OF APPLICANTS.

Applications for employment shall be accepted at any time there is a need for applicants. As a result of a single application, a candidate shall be considered for all classes of positions in which their qualifications might profitably be used. Each candidate for employment shall make application forms provided by the City.

4. REFERENCES.

As part of the pre-employment procedure, former supervisors, employees, and references provided by the candidates will be contacted as a precaution against obtaining undesirable employees. Reference checks made by person or telephone shall be documented and made a part of the applicant's file. These contracts shall be made prior to an offer of employment. All such information will be handled as privileged information.

5. DISQUALIFICATION.

The City Manager may remove from further consideration at any time, the application of an applicant who:

(a) Does not possess the minimum qualifications.

(b) Has established an unsatisfactory employment or personnel record of such a nature as to demonstrate unsuitability for employment.

(c) Has made a false statement of any material fact, or practiced deception on his/her application.

(d) Is afflicted with any mental or physical disqualifying disease or defect that would prevent satisfactory performance of his/her duties.

(e) Is confirmed to be addicted to the habitual use of drugs or intoxicants.

(f) Fails to accept appointment within two (2) days or to report for duty within the time prescribed in the offer.

(g) Fails to have and/or maintain a valid Oklahoma Driver's License or Chauffeur's License, which must be produced prior to employment, provided the position for which they are being hired requires them to operate a motor vehicle.

(h) Fails to produce a social security card which must be seen prior to employment.

(i) Fails to sign loyalty oath – reference Section 8-8 Charter of the City of Piedmont.

SECTION 2-405 EXAMINATIONS.

1. EXAMINATIONS.

Where applicable, all persons shall be required to take an oral, written, or practical examination for the specific position applied for before being offered employment.

2. CHARACTER OR EXAMINATIONS.

All examinations shall be of such a nature that they will fairly test the relative capacity and fitness of the persons examined to discharge the duties of the particular position to which they seek appointment. Such examination shall, in addition to questions of general knowledge, provide for inquiry into the applicant's knowledge of and qualifications for the position for which they are applying. In all municipal departments competitive examinations need not be required for positions which require manual labor services or exceptional qualifications of a scientific, managerial, or professional nature as determined by the City Manager.

3. CONTENT OF EXAMINATIONS.

Examinations for entrance into the municipal service, and for promotion within these service, shall consist of one or more of the following parts as considered appropriate for the various classification of positions:

(a) Written Test. This part, when required, shall include a demonstration designed to show the familiarity of applicants with the knowledge needed in the class of positions to which they seek employment, and the range of their general information.

(b) Oral Interview. This part, when required, shall include a personal interview with applicants for positions where ability to deal with others, to meet the public, or other personal qualifications are to be determined. An oral examination may also be used in examinations where a written test is unnecessary or impracticable. Whenever an oral examination is used, the questions shall be approximately the same for all applicants.

(c) Performance Test. This part, when required, shall include such tests of performance as will determine the ability and skill of applicants to perform the work involved.

(d) Physical Examination. All applicants who have become eligible for hire in all other respects to include voluntary fire men and reserve police officers, are required to take a physical examination, administered by a licensed physician. Physical examinations will be returned to the City Manager prior to anyone being employed or performing and duties for the City. Charges for the physical examination will be encumbered by the City.

(e) Adaptability and Aptitude Test. This part, when required, shall include test designed to determine general adaptability or to ascertain special traits and aptitudes.

(f) Training and Experience. This part shall be required and shall consist of questions

on education and/or experience contained in the application form. The City Manager may, at his discretion, investigate and govern his rating accordingly.

4. CONDUCT OF EXAMINATIONS.

(a) The actual conduct of every examination shall be under the direction of the City Manager, or designated examiner.

(b) The identity of examinees in all competitive written examinations conducted by the City for purpose of establishing eligibility, shall be concealed.

(c) An applicant who in any examination uses, or attempts to use unfair or deceitful means to pass such examination, shall be informed by the examiner witnessing the act that the applicant's actions will be reported to the City Manager with a recommendation that he/she be excluded from further consideration.

5. PASSING SCORE, WRITTEN EXAMINATION.

Weighing on a basis of one hundred present (100%) perfection, seventy percent (70%) shall be the score for passing any test, and no person shall be eligible to appointment whose score on the complete test is less than seventy percent (70%). No person shall be eligible for re-testing until six (6) months has passed for any entrance testing.

6. ORAL INTERVIEW.

All applicants are required to have a personal interview with the City Manager and the department supervisor, if any. The interviews are held in an attempt to determine the applicant's ability to deal with others to meet the public, to fit into our particular work situations, or other personal qualifications.

SECTION 2-406 APOINTMENT, TRANSFERS, DEMOTIONS, REEMPOLYMENT.

1. TYPES OF APPOINTMENT.

The following types of appointments may be made to the City service in conformity with the rules established:

Permanent, seasonal, emergency, probationary, part-time, temporary, re-employment, and return from leave.

(a) Permanent Employees. A permanent employee works fulltime on a continuing basis. They are subject to all rules and regulations and receive all benefits and rights as provided by the personnel ordinance.

(b) Seasonal Employees. These employees are appointed in the same manner and are subject to the same procedures as permanent employees, except that they will be terminated at the close of the season for which they are appointed. They do not receive the benefits provided for permanent employees.

(c) Emergence Employees. In order to prevent the stoppage of public business or loss or serious inconvenience to the public, appointment of employees on a temporary basis may be authorized by the City Manager in accordance with this rule. They do not receive the benefits provided for permanent employees.

(d) Probationary Employees. These employees are working toward a permanent status and will become permanent employees at the end of six (6) months unless they have been terminated or the department supervisor submits a reason for not promoting the employee to permanent status. They receive all benefits and rights as provided by the personnel ordinance.

(e) Part-time Employees. Part-time employees are employees who work less than the normal work week, but on a regular basis. They receive the benefits provided for permanent employment, on a pro-rate basis.

(f) Temporary Employees. Temporary appointments are made when a special project requires the addition of employees for a specific time or to fill a position of an employee on a leave of absence. They do not receive the benefits provided for permanent employees.

2. METHOD OF MAKING AN APPOINTMENT.

Whenever a department supervisor wishes to fill a vacancy, the request for an employee shall be submitted to the City Manager. No specific job recruiting will begin, no appointment will be made, and no appointee will receive compensation for work done until they are formally appointed or hired by the City Manager. As far as practical each vacancy shall be anticipated sufficiently in advance to permit time to determine the best qualified replacement.

3. TRANSFER.

An employee in the classified service may be transferred to a higher classification within the same department or any other department within the City, provided they are qualified for the upgrading. All employees transferring will have a one-hundred eighty (180) day probationary period in their new classification. An employee desiring to be transferred should make their desires known to the department supervisor. When a vacancy occurs, the City Manager will

arrange a meeting between the employee and the department supervisor to which they desire to be transferred. Transferring of employees from one classification to the same classification within the municipal organization will be prohibited unless justified it is in the best interest of the City to do so.

4. DEMOTIONS.

An employee may be demoted to a position of lower grade for which they are qualified for any of the following reasons:

(a) When an employee would otherwise be terminated because their position is being abolished, lack of work, lack of funds.

(b) When an employee does not possess the necessary abilities to render satisfactory Service in the position they hold.

(c) When an employee voluntarily requests such demotion.

SECTION 2-407 PROBATION.

1. OBJECT.

The probation period is an important part of the employment process. It shall be utilized to observe closely the work to secure the most effective adjustment of a new employee in their new position, and to reject an employee whose performance does not meet required work standards.

All regular appointments shall be for a probationary period of six (6) months of actual service, and no appointment shall be deemed finally made until the appointee has satisfactorily served their probationary period. All promotional appointment shall be for six (6) months of actual service, and no appointments shall be deemed finally made until the appointee has satisfactorily served a probationary period. In the event a promotional appointee's employment is not satisfactory or is found incompetent or unqualified to perform the duties of the position to which they were promoted, it shall be the duty of the department supervisor to request a demotion to the level the employee is qualified to perform.

2. DURATION.

The probationary period shall be for six (6) months. For Police Officers and Fire Fighters the period shall be one (1) year after training in completed.

3. DISMISSAL.

During the probationary period an employee who is unable or unwilling to perform the duties of the position satisfactorily or whose habits and dependability do not merit their continuance in the service of the City, will be terminated.

SECTION 2-408 SEPARATION AND DISCIPLINARY ACTION.

1. TYPES OF SEPARATION.

All separation of employees from positions in the classified service shall be designated as one of the following types and shall be accomplished in the manner indicted: Resignation, lay-off, disability, death, retirement, left job, termination of appointment, and dismissal.

2. RIGHTS OF EMPLOYEES.

Permanent employees who separate shall receive payment for all earned salary, payment for all accumulated vacation leave, and payable upon retirement or after five (5) years of continuous service, for one-half (1/2) of all accumulated sick leave up to three hundred twenty hours (320).

3. RESIGNATIONS.

An employee may resign by informing the City Manager of the reason and the effective date, but a minimum of two (2) weeks' notice is desired. Failure to comply with this requirement may result in poor job recommendation and be cause for denying future employment with the City of Piedmont.

4. LAY-OFF.

The City Manager may lay off an employee in the classified service when they deem it necessary by shortage of work or funds, or the abolition of a position.

5. DISABILITY.

An employee may be separated for disability when they cannot perform the required duties due to physical or mental impairments. Action may be initiated by the employee, their legal representative, or the City, but in all cases it must be supported by medical evidence.

6. DEATH.

Separation shall be effective as of the date of death. All compensation due, in accordance with this ordinance, will be paid to the estate of the employee.

7. RETIREMENT.

When an employee reaches the age of seventy (70) years, they must retire unless the City Manager approves an extension of employment. Applicable employees may submit annual extension requests together with recommendations from their department supervisor to the City Manager, accompanied by a complete up-to-date physical report. The City Manager may approve additional extensions for a period of one (1) year each, not to exceed a total of five (5) extensions, or until the employee reaches the age of seventy-five (75) years, at which time retirement shall become mandatory. The applicable employee's physical and mental capabilities shall be considered in granting or denying each annual request. At any time during an extension period should the employee become unable to perform his/her duties, the City Manager may cancel the extension and the employee shall become immediately eligible for retirement.

8. LEFT JOB.

When an employee is absent from work for two (2) consecutive work days, without authorization from the City Manager, the employee will be terminated. A record of an employee who is terminated under such conditions will show the individual may not be eligible for rehire.

9. TERMINATION OF EMPLOYEES.

Employees who have been appointed to a position other than permanent, will be terminated when the job they were hired to accomplish has been completed. Employees performing satisfactory service that are terminated under this condition are eligible for rehire.

10. GROUNDS FOR REMOVAL

Grounds for removal for just cause of an employee in the classified service may include, but shall not be limited to:

(a) Failure to meet prescribed standards of work, morality, and ethics to an extent that makes an employee unsuitable for any kinds of employment in the municipal service.

(b) Theft or destruction of municipal property.

(c) Incompetence, inefficiency, or negligence in the performance of duty.

(d) Insubordination.

(e) Conviction of a criminal offense.

(f) Unauthorized absences or abuse of leave privileges

(g) Acceptance of any valuable consideration which was accepted under the understanding that the employee's service would be adversely influenced.

(h) Falsification of records or use of official position for personal advantage.

(i) The unwillingness to meet financial obligations as may be demonstrated by garnishments of an employee's records. More than two garnishments may result in termination.

(j) Violations of the provisions of the Piedmont City Code.

(k) Drinking of intoxicants while on duty or reporting for duty while intoxicated.

(l) Employee subsequently becomes physically incapacitated.

(m) Failure to maintain a valid Oklahoma state Driver's or Chauffeur's license.

11. DISCIPLINARY ACTION.

Whenever an employee's performance, attitude, work habits, or personal conduct falls below a desirable level, the City Manager shall inform the employee promptly and specifically of such lapses and give counsel and assistance. If appropriate and justified, a reasonable period of time for improvement may be allowed before initiating disciplinary action. However, the action to be taken depends on the seriousness of the incident and the whole pattern of the employee's past performance and conduct.

(a) Reprimand – A situation where oral warning has not resulted in an expected improvement or where more severe initial action is warranted. A written reprimand will be placed in the employee's personnel file and the employee will be furnished a copy for his records.

(b) Suspension – An employee may be suspended without pay by the City Manager for reasons of misconduct, negligence, insubordination, disloyalty, unauthorized absence, or other justifiable reasons when alternate actions are not appropriate. The

employee will be provided written notice of the suspension and a copy of the document will be placed in the employee's personnel file.

SECTION 2-409 GRIEVANCES.

1. POLICY.

The most effective accomplishment of the work for the City requires prompt consideration and equitable adjustment of employee grievances. It is the desire of the City to adjust grievances informally and both supervisors and employees are expected to make every effort to resolve problems as they arise.

2. EXTENT.

The City Manager or any other authority who lays off, suspends without pay for more than ten (10) days, demotes, or removes any officer or employee in the classified service after a probationary period of six (6) months shall, at that time or within five (5) days thereafter, deliver, have delivered, or mail by registered, certified, or similar special mail, to the officer or employee a written statement of the reason or reasons for the layoff, suspension, demotion, or removal.

3. PROCEDURE.

Such officer or employee may appeal in writing to the personnel board. The appeal must be filed with the secretary of the board or with the City Clerk for transmittal to the board within ten (10) days after receipt of notice of the layoff, suspension, demotion, or removal.

4. PERSONNEL BOARD.

As soon as practicable within the next sixty (60) to ninety (90) days the board shall hold a public hearing on the appeal, or give an adequate opportunity therefor, and shall report in writing its findings and recommendations in cases of subordinates of the City Manager to the City Manager, and in other cases to the respective authorities having power of removal within thirty (30) days after the conclusion of the hearing. The City Manager or other authority having power of removal shall then make a final decision in writing regarding the appellant's layoff, suspension, demotion, or removal was made for a political reason or reasons, or for any other reason or reasons than just cause, it shall modify or veto the layoff, suspension, demotion, or removal, and the action by the City Manager or other authority shall be nullified thereby.

SECTION 2-410 LEAVES OF ABSENCE.

1. GENERAL POLICY.

The following types of leave and no other are authorized:

Holidays, vacations, sick leave, injury leave, military leave, civil leave, emergency leave, maternity leave, and leave of absence.

All leaves may be granted in conformance with the rules established for each type of leave, and shall receive the approval of the City Manager. All absences will be reported to the time clerk of the employer's payroll time record sheet.

2. HOLIDAYS WITH PAY

The following, and such days as set by the Council, are paid holidays for employees, except emergency and part-time employees:

New Year's Day (January 1st)
President's Day (3rd Monday in February)
Memorial Day (last Monday in May)
Independence Day (July 4th)
Labor Day (1st Monday in September)
Veteran's Day (Date observed by State of Oklahoma)
Thanksgiving Day (4th Thursday in November)
Friday following Thanksgiving
Christmas Day (December 25th)
The day before Christmas or the day following Christmas (as determined by the City Manager on an annual basis)
One Floating Holiday to be determined by the employee.
Employee's Birthday (must be taken in pay period in which birthday falls)

It shall be the policy of the City to insure that all employees enjoy the same number of holidays each year. Any holiday falling on a Saturday, the preceding Friday or work day will be observed as the holiday. For employees on a work week other than Monday through Friday, their supervisor shall designate the work day that shall be observed.

(a) When a holiday falling on a Saturday, the preceding Friday or work day will be observed as the holiday. Any holiday falling on Sunday will be observed on the following Monday or work day.

(b) Non-exempt employees assigned to a forty (40) hour work week who are required to work on any City scheduled holiday because of the nature of the work, shall receive compensation (either in overtime or compensatory time at the Department Manager's request), at one and one-half (1½) times their hourly rate of pay plus the regular pay for the day.

(c) A holiday falling during a period of paid leave, including vacations, shall not be counted as a work day against the leave expended. However, when an employee is absent without approved leave on a holiday for which they are scheduled to work, such time shall be charged to leave without pay and they shall not be eligible to receive an additional day off at the later date.

(d) Employees must work the day before and the day after a holiday to be eligible for holiday pay unless they are on an authorized paid leave.

(e) An employee terminating their service with the City whose last scheduled work day falls on a holiday shall have the effective date of their separation on the work day immediately preceding the holiday and they will not be eligible for the holiday pay.

3. VACATIONS.

Permanent employees are the only employees eligible for vacation. Vacation time is accrued from the time of your current appointment as follows:

1. Three (3) hours per two week period, eighty (80) hours per year (a two hour adjustment will be made on the employee's anniversary date) for employees with less than five (5) years' service with the City.
2. Eight (8) hours per month, ninety-six (96) hours per year for permanent employees with at least five (5) years of continuous service but less than ten years of continuous service with the City.
3. Ten (10) hours per month, one hundred twenty (120) hours per year for employees with ten (10) years of continuous service with the City.

Vacation time off normal work will be changed at the rate of eight (8) hours. Employees should request use of annual vacation leave in writing at least two (2) working days before taking the requested leave. Request for vacation leave in fewer than two (2) working days may not be granted because of the short notice and the department work load. Vacation leave should be

taken during the year in which it is earned, but can be accumulated from one year to the next as follows:

(a) For employees with less than five (5) years continuous service the maximum accumulation is one hundred sixty (160) working hours.

(b) For employees with at least five (5) years continuous service but less than ten (10) years continuous service the maximum accumulation is two hundred forty (240) working hours.

(c) For employees with ten (10) years or more of continuous service the maximum accumulation is three hundred twenty (320) working hours.

If an employee has unused vacation time and is separated from employment, then they shall be paid for all accumulated vacation leave. No employee shall be given vacation leave in excess of that accumulated. If a newly hired probationary employee is separated, they shall not receive any payment. Although probationary employees accrue vacation time, they may not take vacation leave until they become full-time, permanent employees.

4. SICK LEAVE.

All employees who have successfully completed probationary employee are eligible for sick leave. Sick leave with pay shall be granted for the following reasons:

Personal illness or physical incapacity resulting from causes beyond the employee's control.

Enforced quarantine of the employee in accordance with health regulations. Employees that are absent from work because of illness must notify their supervisor or the City Manager prior to the actual work period beginning time, but in no case later than two (2) hours after the scheduled work period begins.

(a) Amount – Each employee is allowed three (3) hours a pay period for pay for sick leave. Sick leave need not be used within specified time but may be accumulated up to a maximum of seventy-eight (78) work hours at the end of a calendar year. Except as hereinafter provided, there shall be no pay for accumulated sick leave. An employee with more than five (5) years of continuous service may upon separation from employment be paid for accumulated sick leave, but never exceeding 320 hours.

(b) Statement of Attending Physician – A written statement by a licensed physician certifying why the employee's condition prevented same from performing the duties of the position for which they are employed may be required by the City Manager.

(c) Sick leave will not be utilized unless the employee has accumulated same.

(d) Payment of all unused sick leave is authorized when an employee retires. Employees terminating, but not retiring, must have at least five (5) years of continuous service in order to receive payment for unused sick leave. Pay for accumulated hours will be based upon one-half (1/2) of the total accumulated sick leave, but never exceeding 320 hours.

(e) Sick leave may be used where leave is necessitated by serious illness of an employee's immediate family (spouse, children, parents, siblings, parents-in-law, or any members of employee's household).

(f) An employee May transfer not more than forty (40) hours of accumulated sick leave to another employee who has exhausted their accumulated sick leave. The transfer shall be in writing signed by the employee transferring the sick leave. Transfer of sick leave shall be completely voluntary.

5. INJURY LEAVE.

Any employee who is injured in performance of assigned duties shall be eligible for injury leave with pay not to exceed thirty (30) calendar days for each separate injury, and such leave is not charged against sick leave or vacation leave.

(a) Use of Injury Leave – The employee's eligibility for injury leave will be dependent upon the notification of accident or injury being made to the supervisor immediately and a written accident report submitted by the supervisor within twenty-four (24) hours after the occurrence thereof to the City Manager. A written report signed by the attending physician authentication the extent of the injury and the estimated date the employee shall return to work. The departmental supervisor will not let the employee perform any assigned duties until a release from the attending physician is obtained.

(b) Payment for Injury Leave – Pay for days of injury leave will be computed on the basis of the employee's regular salary, minus payments made to the employee under the provisions of the Oklahoma Workmen's Compensation Pay Schedule.

(c) Medical care will be provided to the employee under the provisions of the Oklahoma Workmen's Compensation Law.

6. MILITARY LEAVE.

Military duty means training and service performed by a reservist, or any entrant into a temporary component of the Armed Forces of the United States, or as a member of the National Guard of the United States, where the call is for training only.

(a) Eligibility – all employees who are members of the National Guard, Reserve Forces of the Army, Navy, Air Force, Marines, and Coast Guard, or any component of the Armed Forces of the United States shall, when ordered by proper authority, to active service, be entitled to a leave of absence from employment for the period of such active service, without loss of pay during the first twenty (20) calendar days of such leave during any calendar year.

7. CIVIL LEAVE.

Any employee shall be given necessary time off without loss of pay when subpoenaed for jury duty or as a witness; provided, subpoena action does not involve the employee's personal affairs or in a case where an employee would normally testify in performance of assigned duties, not to exceed thirty (30) days in any twelve (12) month period.

8. EMERGENCY LEAVE.

All employees are eligible for emergency leave. Emergency leave with pay shall be granted for the following reasons:

Serious illness of a member of employee's household, such as trip to emergency, or life-threatening illness that requires their personal car or attention.

Death in the employee's immediate family (spouse, parents, grandparents, brothers and sisters, sons, daughters, mother-in-law, father-in-law, and members of the employee's household.

Maximum time allowed off at one time is three (3) working days. This leave is in addition to all other leaves.

9. MATERNITY LEAVE.

Disabilities caused or contributed to a pregnancy, miscarriage, abortion, childbirth, or recovery therefrom are, for all job-related purposes, temporary disabilities and should be treated as such. The time when a pregnant woman should cease working or return to work must be determined on an individual basis and depends upon the physical condition of the particular woman and the nature of the job as determined by the attending physician. An employee who adopts a child shall be eligible for maternity leave.

SECTION 2-411 CONDUCT OF EMPLOYEES.

1. HOURS OF WORK.

Employees shall work forty (40) hours a week, and the hours during which Municipal offices shall be open for business shall be from 8:00 A.M. to 5:00 P.M. Monday through Friday. Work hours for employees other than Municipal Building employees shall be set by the respective department supervisor, but should conform to the 8:00 A.M. to 5:00 P.M. work day, if possible. No compensatory time is authorized without approval of the City Manager. Overtime hours authorized by the City Manager will be granted compensatory time off in accordance with the Fair Labor Standards Act.

2. OUTSIDE EMPLOYMENT.

Employees may engage in additional employment outside of the office hours of duty if approved in writing by the City Manager. If at any time the City Manager feels that outside employment is interfering with an employee's job performance, he may request that employee to give up their other employment. In all instances of outside employment, the employee's personnel file will contain a copy of the City Manager's approval.

3. PECUNIARY INTEREST.

No municipal officer or employee, or any business in which said officer or employee, or the spouse of the officer or employee, has a proprietary interest shall engage in:

(a) Selling, buying, or leasing property, real or personal, to or from the municipality.
(b) Contracting with the municipality; or,
(c) Buying or bartering for or otherwise engaging in any manner in the acquisition of any bonds, warrants, or other evidence of indebtedness of the municipality.

4. POLITICAL ACTIVITY

Municipal employees may attend and express their views at City Council meetings, or any other public meetings of municipal entities. Any municipal employee may actively participate in partisan and nonpartisan political activities, provided, the political activity in which the employee participates shall be exercised only during off-duty hours and while not in uniform. Any federal statutes restricting the political activities of certain municipal employees shall supersede the provisions of this section as to such employees. Municipal employees will refrain from filing as a candidate for public office while employed by the City of Piedmont.

5. NEPOTISM.

Neither the City Manager, City Councilmembers, nor any other authority of the City government may appoint or elect any person related to the Mayor, and Councilmember, City Manager, or to himself, or in the case of plural authority to one of its members, by affinity or consanguinity within the third degree, to any office or position of profit in the City government; but this shall not prohibit a person so related from continuing in the service of the City.

Except as may be otherwise provided by this ordinance, the same person may hold more than one office or position in the City government. The City Manager may hold more than one such office, or position, through appointment by himself, by the City Council, or by other City authority having power to fill the particular office or position, subject to any regulations which the City Council may make by ordinance; but they may not receive compensation for service in such other offices or positions. Also, the City Council, by ordinance, may provide that the city Manager shall hold ex officio any designated administrative offices subordinate to the position of City Manager, as well as other designated compatible City offices.

6. USE OF CITY EQUIPMENT.

City of Piedmont buildings, equipment and tools are for official use only and are to be used with care and is to be used only for official business by City officials or employees.

(a) Any employee found to be using City equipment, buildings or tools for non-work related tasks or in a manner which personally benefits the employee shall be subject to disciplinary action up to and including immediate discharge. Only equipment that has been assigned directly to an employee by the City Manager may be taken to an employee's place of residence or out of the City limits.

(b) Any employee who compels another employee to work on non-city related tasks while on City time shall be subject to disciplinary action up to and including immediate discharge.

(c) Any employee found to be working on personal projects while on City Time shall be subject to disciplinary action up to and including immediate discharge.

(d) Any employee found to be using any City equipment or tools in a carless or negligent manner shall be subject to disciplinary action up to and including immediate discharge.

(e) Employee using City equipment or tools shall be responsible for them at all times. Equipment or tools lost or damaged due to negligence on the employee's part shall be replaced at the employee's expense.

(f) No employee may remove City equipment or tools form City property without approval from the Department Manager.

This particularly applies to City-owned vehicles. Such vehicles will be assigned by the City Manager, in writing, to those employees who are required by the nature of their duties to make use of a City vehicle on an emergency call basis. Any City-owned vehicle that is not required to be left in the City's custody during the hours from 5:00 P.M. to 8:00 A.M. and during the weekend, must be parked on the employee's property and not in the street right-of-way. Written assignment of a vehicle by the City Manager will be filed in the employee's personnel file.

7. TRAVEL.

If a City employee is authorize by the City Manager at attend a meeting, a seminar, or school that pertains to City business with expenses not exceeding Five Hundred Dollars ($500.00), a request will be submitted to the City Clerk for funds to cover the cost of enrollment as substantiated by an official program of the meeting, seminar, or school, and other expenses that may be incurred, not to exceed the following amounts:

(a) Transportation by private vehicle – mileage rate allowable under current Internal Revenue Service regulations.

(b) Public air transportation – this amount will be equal to the cost of a round-trip, tourist class ticket, including airport limousine or tax service not to exceed Twenty Dollars ($20.00) per trip. A greater amount may be authorized by the City Manager. Any trip outside of the State of Oklahoma will be made by air, or compensated for on this basis.

(c) Food – Per Diem Rates as established by the U.S. General Service Administration. Greater amounts may be approved by the City Manager if required in advance, except for those meals obtained as a normal part of the travel fair, registration fee, or seminar fee. www.gsa.gov

(d) Lodging – Per Diem Rates as established by the U.S. General Service Administration. Greater amounts may be approved by the City Manager if required in advance, except for those meals obtained as a normal part of the travel fair, registration fee, or seminar fee. www.gsa.gov

(e) Miscellaneous – This amount is to cover tips and taxi fares. Expenses anticipated to be covered by the same standard and procedures given above. Receipts are required for reimbursement upon completion of travel for all items other than miscellaneous. A written estimate of such expenses shall be prepared and approved by the City Manager in advance of travel.

8. GIFTS.

Gifts may be exchanged if it is done on an office, department, or City-wide employee basis and involves gifts which cost Twenty Dollars ($20.00) or less.

SECTION 2-412 TRAINING AND DEVELOPMENT.

1. ELIGIBILTY.

All employees are eligible to participate in all required training, recommended training, and on-the-job training programs; provided, each course will tend to improve the services which the employee was hired to perform. Enrollment in any course must be proceeded by an authorization form from the department supervisor to the City Manager for approval or disapproval. A copy for the authorization form will be placed in the individual's personnel file, When the course is completed the individual will provide a copy of any certificate, diploma, etc. to the City Manager which will be filed in the individual's personnel file.

2. TUITION ASSISTANCE.

Tuition assistance for permanent employees may be provided for those who have requested courses in advance of enrollment, and which are administered by an accredited college, university, or technical training center. To be acceptable for reimbursement of tuition and book fee each course taken must provide training which will tend to improve the services which the employee was hired to perform or may be reasonably expected to perform and completed with a grade of "c" or "satisfactory" is acceptable. Correspondence will not qualify for assistance. A copy of the official courses needed towards a degree must be attached to the individual's request. The request must be approved in writing by the City Manager and filed in the individual's personnel file. Tuition reimbursement will be limited to the hour/credit rate for community colleges in the Oklahoma City Standard Metropolitan Statistical Area, and not to exceed six (6) hours/credits per semester. Tuition reimbursement will be budgeted on an annual basis, and no reimbursement shall exceed the budgeted amount.

3. COMPLETION.

Upon successful completion of an approved course or courses the applicant will initiate a claim on a purchase order for reimbursement of books and tuition as follows:

(a) The employee must present a receipt from the university or college reflecting the amount paid for books and tuition.

(b) The employee must present a grade report from the registrar reflecting grade "C" or higher, or "satisfactory".

(c) The above items must be attached to a completed purchase order.

4. INVENTIVE PAY.

The City will provide education incentive pay as follows:

(a) College/University Degree: Permanent full-time employees will receive pay in addition to the base pay plan for educational achievement as follows:

$100.00 annually for Associate Degree
$200.00 annually for Bachelor's Degree
$300.00 annually for Advanced Degree.

The payment for educational achievement shall not be cumulative in that only one educational benefit shall apply to each employee based upon the highest degree obtained. The educational benefit shall be paid on the last pay period of the calendar year (along with normal payroll with each pay period payment being the applicable percentage of the annual payment, commencing on the first pay period) following proof of award of such degree.

(b) Technical Certification Pay. Each permanent employee will receive pay in addition to the base pay plan for technical certification as follows:

$100.00 annually for DEQ Class D Water/Sewer Operator's License
$150.00 annually for DEQ Class C Water/Sewer Operator's License
$200.00 annually for DEQ Class B Water/Sewer Operator's License
$250.00 annually for DEQ Class A Water/Sewer Operator's License

The technical certification pay shall be paid on the last pay period of the calendar year (along with normal payroll with each pay period payment being the applicable percentage of the annual payment). Said payment commencing on the first day period following proof of issuance of license.

Other certifications pay will be paid along with the normal

$150.00 annually for Court Clerk Certification.
$150.00 annually for City Clerk Certification.

(This page intentionally left blank)

PART 3

ALCOHOLIC BEVERAGES

CHAPTER 1

ALCOHOLIC BEVERAGES

Section 3-101 Definitions.
Section 3-102 Amount of tax.
Section 3-103 Application for license, conditions.
Section 3-104 Application for certificate of zoning, code compliance.
Section 3-105 Compliance with State and City law.
Section 3-106 Sale to minors prohibited, minors prohibited from premises.
Section 3-107 Transportation of intoxicating beverages in vehicles; exceptions.
Section 3-108 General prohibitions.
Section 3-109 Consumption of intoxicating alcoholic beverage in public places.
Section 3-110 Misrepresentation of age.
Section 3-111 Employment of persons under age of twenty-one (21) prohibited.
Section 3-112 Persons under age twenty-one (21) in possession of intoxicating beverages in public prohibited.
Section 3-113 Location of retail package store and mixed beverage establishments, exceptions.
Section 3-114 Hours of operation.
Section 3-115 Package store premises to be separated from premises where other business conducted.
Section 3-116 Sale or delivery prohibited on certain days.

CHAPTER 2

LOW-POINT BEER

Section 3-201 Definitions.
Section 3-202 State licenses.
Section 3-203 Retail dealer's license required; license fees.
Section 3-204 Application or license.
Section 3-205 Minors on premises prohibited, exceptions.
Section 3-206 Sale of low-point beer to minor prohibited.
Section 3-207 Employment of persons under minimum age; exceptions.
Section 3-208 Sale of low-point beer prohibited during certain hours; exceptions.
Section 3-209 Transportation of low-point beer in moving vehicle.

Section 3-210 Minors in possession of low-point beer prohibited while in public.
Section 3-211 Consumption of low-point beer in public places; penalty; exception.
Section 3-212 Misrepresentation of age by false or altered documentation.
Section 3-213 Inspections.
Section 3-214 Location of retail dealers.
Section 3-215 Class I retail dealer regulations.

CHAPTER 3

RESTRICTIONS ON GATHERINGS - MINORS CONSUMING ALCOHOLIC BEVERAGES

Section 3-301 Permitting or allowing gatherings where minors are consuming alcoholic beverages.

CHAPTER 1

ALCOHOLIC BEVERAGES

Section 3-101	Definitions.
Section 3-102	Amount of tax.
Section 3-103	Application for license, conditions.
Section 3-104	Application for certificate of zoning, code compliance.
Section 3-105	Compliance with state and city law.
Section 3-106	Sale to minors prohibited, minors prohibited from premises.
Section 3-107	Transportation of intoxicating beverages in vehicles; exception.
Section 3-108	General prohibitions.
Section 3-109	Consumption of intoxicating alcoholic beverage in public places.
Section 3-110	Misrepresentation of age.
Section 3-111	Employment of persons under age of twenty-one (21) prohibited.
Section 3-112	Persons under age twenty-one (21) in possession of intoxicating beverages in public prohibited.
Section 3-113	Location of retail package store and mixed beverage establishments, exceptions.
Section 3-114	Hours of operation.
Section 3-115	Package store premises to be separated from premises where other business conducted.
Section 3-116	Sale or delivery prohibited on certain days.

SECTION 3-101 DEFINITIONS.

A. Definition of terms used in this chapter shall be in conformity with those provided in Section 506 of Title 37 of the Oklahoma Statutes.

B. As used herein:

1. "ABLE Commission" means the Alcoholic Beverage Laws Enforcement Commission of the state;

2. "Alcohol" means and includes hydrated oxide of ethyl, ethyl alcohol, ethanol or spirits of wine from whatever source or by whatever process produced. It does not include wood alcohol or alcohol which has been denatured or produced as denatured in accordance with acts of Congress and regulations promulgated thereunder;

3. "Alcoholic beverage" means alcohol, spirits, beer and wine as those terms are defined herein and also includes every liquid or solid, patented or not, containing alcohol, spirits, wine or beer and capable of being consumed as a beverage by human beings, but does not include nonintoxicating beverages as that term is defined in Sec. 3-201 of this chapter;

4. "Beer" means any beverage containing more than three and two-tenths (3.2) percent of alcohol by weight and obtained by the alcoholic fermentation of an infusion or decoction of barley, or other grain, malt or similar products. Beer includes, among other things, beer, ale, stout, lager beer, porter and other malt or brewed liquors, but does not include sake, known as Japanese rice wine. Beer may or may not contain hops or other vegetable products;

5. "Bottle club" means any establishment in a county which has not authorized the retail sale of alcoholic beverages by the individual drink, which is required to be licensed to keep, mix and serve alcoholic beverages belonging to club members or club premises; it includes any association, person, firm or corporation, key club, locker club, pool club, or any other kind of club or association, excluding the general public from its premises or place of meeting or congregating or operating or exercising control over any other place where persons are permitted to drink alcoholic beverages other than in a private home;

6. "Caterer license" authorizes the licensee, whose business is to provide food, supplies, and services at a social gathering, to sell mixed beverages for on-premises consumption incidental to the sale or distribution of food;

7. "Licensee" means any person holding a license under the Oklahoma Alcoholic Beverage Control Act, and any agent, servant, or employee of such licensee while in the performance of any act or duty in connection with the licensed business or on the licensed premises;

8. "Mixed beverage establishment" (Class I and II) means any establishment in a county which has authorized the retail sale of alcoholic beverages by the individual drink to be one or more servings of a beverage composed in whole or part of an alcoholic beverage in a sealed or unsealed container of any legal size for consumption on the premises where served or sold by the holder of a mixed beverage caterer or special event license; it includes any association, person, firm or corporation key club, bottle club, locker club, excluding the general public from its premises or place of meeting or congregating or operating or exercising control over any other place where persons are permitted to drink alcoholic beverages other than in a private home. A Class I mixed beverage establishment sells alcoholic beverages for consumption on the premises but the sales do not exceed twenty-five percent (25%) of the gross sales of the establishment at that location. A Class II mixed beverage establishment sells alcoholic beverages for consumption on the premises and sales exceed twenty-five percent (25%) of the gross sales of the establishment at that location;

9. "Mixed beverage license" authorizes the licensee to purchase alcoholic beverages in retail containers from the holder of a wholesaler or Class B wholesaler licensee and to sell, offer for sale and possess mixed beverages for on-premises consumption only;

10. "Mixed beverages" means one or more servings of a beverage composed in whole or part of an alcoholic beverage in a sealed or unsealed container of any legal size for consumption on the premises where served or sold by the holder of a mixed beverage, caterer, or special event license;

11. "Sale" means any transfer, exchange or barter in any manner or by any means whatsoever, and includes all sales made by any person, whether as principal, proprietor, agent, servant or employee. The term "sale" shall also include the use or consumption of any alcoholic beverage obtained within or imported from without this state upon which the excise tax levied by the laws of the state has not been paid or exempted;

12. "Special event license" authorizes the licensee to sell and distribute mixed beverages for consumption on the premises for which the license has been issued for a period not to exceed ten (10) consecutive days;

13. "Wine" means and includes any beverage containing more than one-half of one percent (0.5%) alcohol by volume and not more than twenty-four percent (24%) alcohol by volume

at sixty degrees (60o) Fahrenheit, obtained by the fermentation of the natural contents of fruits, vegetables, honey, milk or other products containing sugar, whether or not other ingredients are added, and includes vermouth and sake, known as Japanese rice wine. (Prior Code, Sec. 2-2, 2-3, 2-8, as amended)

State Law Reference: Alcoholic Beverage Control Act, 37 0.S. Secs. 501 et seq.; city powers generally as to alcoholic beverages, 37 0.S. Sec. 503.

SECTION 3-102 AMOUNT OF TAX.

A. There is hereby levied and assessed an annual occupation tax on every business or occupation relating to alcoholic beverages as specifically enumerated herein and pursuant to the provisions of Section 554.1 of Title 37 of the Oklahoma Statutes in the amount as set by the city council by motion or resolution.

B. The occupation tax for a brewer and a class "B" wholesaler shall be reduced by seventy-five percent (75%) if the brewer of class "B" wholesaler is also the holder of a license from the state to manufacture or wholesale any nonintoxicating malt beverages as provided in Section 518 of Title 37 of the Oklahoma Statutes.

C. The occupation tax levied herein shall be paid in advance to the city clerk who shall issue a receipt therefor.

D. Upon payment of the occupation tax, the city clerk shall issue a receipt, signed by the city clerk, to the state licensee paying such occupational tax. The city clerk shall also record the name of the licensee and the address where the licensee engages in his occupation. Such record shall be duly filed and kept in the permanent files of the city for at least five (5) years. Thereafter, upon resolution by the council, it may be destroyed.

E. Any state licensee shall post his tax receipt in a conspicuous place on the premises wherein he carries on his occupation.

F. The occupation tax shall cover only the person paying the tax and no other of a successor thereof, and shall not be refundable.

G. The city clerk shall make and transmit to the ABLE commission an annual report showing the number and class of licenses subject to the tax and the amount of money received therefrom.

H. All sums due from any person by reason of occupation taxes imposed by this chapter and all penalties accruing from such person by reason of failure to pay such tax shall be recoverable at the suit of the city, brought against such person in any court of competent jurisdiction. In any suit, in addition to the tax and penalties, the plaintiff shall recover interest, at the rate of ten percent (10%) per annum, upon all sums due by way of tax and penalty from the date of accrual thereof, and all costs of collection, judicial or otherwise, including reasonable attorney's fees, all to be determined by the court. Prosecution for an offense against the city, arising out of the failure to pay a tax levied by this chapter, regardless of the outcome thereof or its continued pendency, shall not constitute a defense or bar in any manner to the collection of the tax and penalties, if any are due, as herein provided. (Prior Code Secs. 2-1. 2-3, 2-7)

State Law Reference: Cities may levy occupation tax not to exceed state fee, 37 0.S. Sec. 554.1; state license fee amounts, 37 0.S. Sec. 518.

Ed. Note: See Fee Schedule for occupational license fees.

SECTION 3-103 APPLICATION FOR LICENSE, CONDITIONS.

A. Every person desiring to obtain a license as provided for herein shall make application to the city clerk on forms to be provided setting forth the location of the business, the names of all persons interested in the business, together with their addresses; if a corporation, the application shall include the names of the president and managing officer.

B. The city administrator shall conduct an investigation as to whether the applicant meets the conditions of this chapter.

C. No licensee shall be issued a license without satisfactory showing that the applicant has:

1. Satisfied the conditions of this chapter;

2. Obtained all applicable state and county permits or licenses; and

3. Paid the tax as required herein.

D. No license shall be issued or valid unless the licensee meets the requirements of the city's zoning ordinances and regulations.

E. A Class I or II licensee for mixed beverage establishment must comply with the percentage of gross sales as required in this chapter. (Prior Code, Sec. 2-4, 2-5)

SECTION 3-104 APPLICATION FOR CERTIFICATE OF ZONING AND CODE COMPLIANCE.

A. Every applicant for a certificate of compliance with the zoning, fire, health and safety codes of the city required by Title 37 of the Oklahoma Statutes shall apply at the office of the city clerk by:

1. Filing a written application on forms prescribed by that office; and

2. Paying a standard fee in the amount as set by the council for the type of license at the time of filing.

B. Upon receipt of an application for a certificate of compliance, the city administrator shall cause an investigation to be made to determine whether the premises proposed for licensed operations comply with the provisions of the zoning ordinance and any health, fire, building or other safety codes applicable to it.

C. Upon finding that the premises of an applicant for a certificate is in compliance with all applicable zoning ordinances, a certificate of zoning shall be issued to the ABLE commission.

D. Upon finding that the premises of an applicant for a certificate is in compliance with all applicable fire, safety and health codes, a certificate of compliance shall be issued to the ABLE commission.

E. The above certificates of compliance shall be signed by the city administrator. (Prior Code, Sec. 2-6, 2-46)

SECTION 3-105 COMPLIANCE WITH STATE AND CITY LAW.

No person shall own, operate or maintain a retail package store or mixed beverage establishment, or produce, manufacture, distribute, rectify, bottle or sell any beer, spirits, wine or other alcoholic beverage, without first obtaining valid licenses issued by the state and the city. (Prior Code, Sec. 2-10)

SECTION 3-106 SALE TO MINOR PROHIBITED, MINORS PROHIBITED FROM PREMISES.

A. No person shall sell, deliver, furnish or give any alcoholic beverage to any person under the age of twenty-one (21) years, except that this sentence shall not apply to a parent or guardian as regards his child or children.

B. No licensee shall permit any person under twenty-one (21) years of age to enter, remain within or be about the premises of a retail package store or Class II mixed beverage establishment.

C. No person under twenty-one (21) years of age shall enter, remain within or be about the premises of a retail package store or Class II mixed beverage establishment. (Prior Code, Secs. 2-20, 2-21)

SECTION 3-107 TRANSPORTATION OF INTOXICATING BEVERAGES IN VEHICLES; EXCEPTION.

A. No person shall knowingly transport alcoholic beverages in any vehicle upon any public highway, street or alley unless in the original container which is unopened, the seal unbroken and the original cap in place.

B. Subsection A of this section shall not apply if the opened container is in the rear trunk or compartment or the spare tire compartment in a vehicle commonly known as a station wagon or panel truck, or in any outside compartment which is inaccessible to the driver or any passenger while the vehicle is in motion. (Prior Code, Sec. 2-37)

State Law Reference: Similar provisions, 37 0.S. Sec. 537.

SECTION 3-108 GENERAL PROHIBITIONS.

A. No person shall:

1. Purchase any alcoholic beverage at retail or wholesale from any person other than a dealer licensed by the ABLE Commission;

2. Except as otherwise permitted in this chapter, drink any alcoholic beverage in public except on the premises of a licensee who is authorized to sell or serve alcoholic beverages by the individual drink or be intoxicated in a public place; or

3. Open a container of intoxicating beverages or consume alcoholic beverages on the premises of a retail package store; or

4. Possess more than one quart of any alcoholic beverage unless the state tax has been paid thereon, except as may be otherwise provided by law.

B. No licensee shall:

1. Give any alcoholic beverage as a prize, premium or consideration for any lottery, game of chance or skill or any type of competition; or

2. Advertise or offer "happy hours" or any other means or inducements to stimulate the consumption of alcoholic beverages including:

a. Deliver more than two (2) drinks to one person at one time;

b. Sell or offer to sell to any person or group of persons any drinks at a price less than the price regularly charged for such drinks during the same calendar week, except at private functions not open to the public;

c. Sell or offer to sell to any person an unlimited number of drinks during any set period of time for a fixed price, except at private functions not open to the public;

d. Sell or offer to sell drinks to any person or group of persons on any one day at prices less than those charged the general public on that day, except at private functions not open to the public;

e. Increase the volume of alcoholic beverages contained in a drink without increasing proportionately the price regularly charged for such drink during the same calendar week; or

f. Encourage or permit, on the licensed premises, any game or contest which involves drinking or the awarding of drinks as prizes.

C. No licensee shall:

1. Allow any person on the premises where nonintoxicating or alcoholic beverages are sold or dispensed for consumption on the premises of the licensee where such person is unclothed or in such attire, costume or clothing as to expose to view any portion of the breast below the top of the areola or any portion of the pubic area, buttocks or genitalia;

2. Permit any person to perform acts of, or acts which simulate sexual acts;

3. Permit any person to use artificial devices or inanimate objects to depict any lewd activities; or

4. Permit the showing of films, still pictures, electronic reproduction or other visual reproduction depicting any of the prohibited acts in this section.

D. No licensee shall permit any drink solicitation, or request from a patron to purchase any nonintoxicating or intoxicating alcoholic beverage for consumption on the premises of the licensee, as that term is defined in this chapter. (Prior Code, Sec. 2-22, 2-25 in part)

State Law Reference: Similar provisions, 37 0.S. Sec. 537.

SECTION 3-109 CONSUMPTION OF INTOXICATING ALCOHOLIC BEVERAGE IN PUBLIC PLACES.

No person within the city shall drink intoxicating liquor in any public place, unless authorized by the Alcoholic Control Beverage Act, nor shall any person be intoxicated in a public place within the city.

SECTION 3-110 MISREPRESENTATION OF AGE.

No person shall misrepresent his age either orally or in writing or by presenting false or altered documentation of age for the purpose of inducing any person to sell him alcoholic beverages.

Cross Reference: Misrepresentation of age by false documents generally, Sec. 10-508; nonintoxicating beverages, see Sec. 3-212 of this code.

SECTION 3-111 EMPLOYMENT OF PERSONS UNDER AGE OF TWENTY-ONE (21) PROHIBITED.

No licensee shall employ, assist or aid in causing the employment of any person under the age of twenty-one (21) years in the selling, manufacture, distribution or other handling of alcoholic beverages. However, a mixed beverage, caterer, or special event licensee may employ servers who are eighteen (18) years of age or older, except in designated bar or lounge areas. (Prior Code, Sec. 2-17)

SECTION 3-112 PERSONS UNDER AGE TWENTY-ONE (21) IN POSSESSION OF INTOXICATING BEVERAGES IN PUBLIC PROHIBITED.

No person under age twenty-one (21) years of age shall be in possession of any alcoholic beverage while such person is upon any public street, road, highway or in any public place.

SECTION 3-113 LOCATION OF RETAIL PACKAGE STORE AND MIXED BEVERAGE ESTABLISHMENTS, EXCEPTIONS.

A. No person shall own, operate, maintain or have any interest in any retail package store which is located at a place in this city which is forbidden as a location for such store by state laws or city ordinances.

B. The location of retail package store or Class I or Class II mixed beverage establishment is specifically prohibited within three hundred (300) feet from any church property primarily and regularly used for worship services and religious activities, or public school. If any such church or school shall be established within three hundred (300) feet of any licensed premises

after such premises had been licensed, this shall not be a bar to renewal of such license by Alcoholic Beverage Laws Enforcement Commission so long as it has been in continuous force and effect. The distance shall be measured from the nearest property line of such church or school to the nearest public entrance door of the premises of such package store or mixed beverage establishment along the street right-of-way line providing the nearest direct route usually travelled by pedestrians between such points. A retail package store or Class I or Class II mixed beverage establishment shall not be located on any city block where a church or school is located.

C. In addition to other conditions of this section, no Class II mixed beverage establishment shall:

1. Front onto any street other than an expressway or major thoroughfare, or any collector street located within a commercially zoned area;

2. Have vehicular access onto any residential street;

3. Locate in any area other than permitted under the city's zoning ordinances; or

4. Be located in a structure which is closer than one hundred fifty (150) feet from the property line of any other property zoned and used for residential purposes. (Prior Code, Sec. 2-5, in part)

State Law Reference: Similar provisions, 37 0.S. Sec. 518.2; Location as zoning classification, 37 0.S. Sec. 528.2.

SECTION 3-114 HOURS OF OPERATION.

A. No package store licensee shall sell or keep a package store premises open for the purpose of selling any alcoholic beverages at any hour than between the hours of 10:00 A.M. and 9:00 P.M., Monday through Saturday.

B. No alcoholic beverages may be sold, dispensed, served or consumed on the premises of a mixed drink beverage licensee or bottle club between the hours of 2:00 A.M. and 10:00 A.M. No licensee shall permit any person, who has in his possession an open container, having as its contents an intoxicating alcoholic beverage, to remain in mixed beverage establishment between the hours of 2:15 A.M. to 10:00 A.M. No person, having in his possession an open container, having as its contents an intoxicating alcoholic beverage, shall remain in mixed beverage establishment between the hours of 2:15 A.M. to 10:00 A.M. For the purpose of this section, an open container shall mean any receptacle containing nonintoxicating or intoxicating alcoholic beverage, to include the original container of the beverage where the original seal has been broken or opened.

SECTION 3-115 PACKAGE STORE PREMISES TO BE SEPARATED FROM PREMISES WHERE OTHER BUSINESS CONDUCTED.

No person shall maintain, operate, or assist in any manner in the maintenance or operation of a package store upon premises which are not separated from adjoining premises, on which any other goods, wares or merchandise are sold or services are rendered, by nontransparent walls, broken only, if at all, by a passage to which the public is not admitted. No person shall take any alcoholic beverage through such passageway for the purpose of selling or reselling such beverage, or for the purpose of delivery thereof in connection with a sale of such beverage. (Prior Code, Sec. 2-11)

State Law Reference: Similar provisions, 37 O.S. Sec. 534.

SECTION 3-116 SALE OR DELIVERY PROHIBITED ON CERTAIN DAYS.

A. No licensee shall engage in retail sale of alcoholic beverages on such days and times as prohibited by the state law.

B. No wholesale dealer in alcoholic beverages shall sell or deliver to any package store and no package store shall sell any amount of spirits or wines on Saturday or Sunday of any week or on New Year's Day, Memorial Day, the Fourth of July, Labor Day, Veterans Day, Thanksgiving Day or Christmas Day, or at any time while the polls are open on the day of any general, primary, runoff primary or special election, whether national, state, county or city. (Prior Code, Secs. 2-15, 2-16)

CHAPTER 2

NONINTOXICATING BEVERAGES

Section 3-201	Definitions.
Section 3-202	State licenses.
Section 3-203	Retail dealer's license required; license fees.
Section 3-204	Application for license.
Section 3-205	Minors on premises prohibited, exceptions.
Section 3-206	Sale of nonintoxicating alcoholic beverages to minor prohibited.
Section 3-207	Employment of persons under minimum age; exceptions.
Section 3-208	Sale of nonintoxicating beverages prohibited during certain hours; exceptions.
Section 3-209	Transportation of nonintoxicating beverages in moving vehicle.
Section 3-210	Minors in possession of nonintoxicating alcoholic beverages prohibited while in public.
Section 3-211	Consumption of nonintoxicating alcoholic beverages in public places; penalty; exception.
Section 3-212	Misrepresentation of age by false or altered documentation.
Section 3-213	Inspections.
Section 3-214	Location of retail dealers.
Section 3-215	Class I retail dealer regulations.

SECTION 3-201 DEFINITIONS.

As used herein:

1. "Nonintoxicating beverage" means all beverages containing more than one-half of one (0.5) percent alcohol by volume, and not more than three and two-tenths (3.2) percent alcohol by weight;

2. "Minor" means a person who, in accordance with state law, has not yet attained the age at which the consumption of nonintoxicating alcoholic beverages is permitted; and

3. "Retail dealer" (Class I and Class II) means and includes any and all persons who sell, distribute or dispense any nonintoxicating alcoholic beverages at retail to the public for consumption or use, whether consumed on the premises or not. A dealer who is engaged in wholesaling nonintoxicating alcoholic beverages for resale shall not be exempt from the provisions of this chapter if he also sells, distributes or dispenses such beverages direct to the public for consumption or use. A Class I retail dealer sells, distributes or dispenses nonintoxicating alcoholic beverages for consumption on the premises. A Class II retail dealer sells, distributes or dispenses nonintoxicating alcoholic beverages at retail for consumption off the premises.

(Prior Code, Sec. 2-3, 2-27)

State Law Reference: Manufacture and sale of nonintoxicating beverages, 37 0.S. Secs. 163.1, et seq.

SECTION 3-202 STATE LICENSES.

No person shall engage in the business of selling, offering for sale or distributing any nonintoxicating beverages, at retail, for consumption or use, without first having obtained a state

license to do so, and in cases where such beverages are consumed on the premises, a license as provided by the statutes of the state. (Prior Code, Sec. 2-28)

SECTION 3-203 RETAIL DEALER'S LICENSE REQUIRED; LICENSE FEES.

A. No person shall sell, distribute or dispense any nonintoxicating beverage at retail to the public without first having obtained a license to do so from the city, and making payment in advance to the city clerk in the amount as provided herein.

B. The annual fee for a license under this chapter shall be Twenty Dollars ($20.00) for retail dealers selling nonintoxicating beverages for consumption on or off the premises, and Ten Dollars ($10.00) for retail dealers selling nonintoxicating beverages in original packages and not for consumption on the premises.

C. No license issued hereunder is transferable.

D. Licenses required by this chapter shall be issued by the city clerk upon payment of the required fee and compliance by the applicant with all applicable ordinances of the city, and upon a satisfactory showing that the applicant has obtained such state and county permits as are required by law. (Prior Code, Sec. 2-28)

State Law Reference: State licenses cities not to levy greater than state fee, 37 0.S. Sec. 163.7

SECTION 3-204 APPLICATION FOR LICENSE.

An applicant for a retail dealer's license or renewal of such license shall deposit the required fee with the city clerk and submit an application on the form provided containing the information required by the city.

SECTION 3-205 MINORS ON PREMISES PROHIBITED, EXCEPTIONS.

A. It is unlawful for any person who holds a license to sell and dispense nonintoxicating beverages for consumption on the premises, or any agent, servant, or employee of the license holder, to permit any minor to be admitted to or remain in a separate or enclosed bar area of the licensed premises which has as its main purpose the selling or serving of nonintoxicating beverages for consumption on the premises, unless the minor's parent or legal guardian is present. The provisions of this section shall not prohibit minors from being admitted to an area which has as its main purpose some objective other than the sale or serving of nonintoxicating beverages, in which sales or serving of the beverages are incidental to the main purpose, as long as minors are not sold or served the beverages; however, the incidental service of food in the bar area shall not except a licensee, agent, servant, or employee from the provisions of this section.

B. If the premises of a holder of a license to sell nonintoxicating beverages contains a separate or enclosed bar area which has as its main purpose the sale or serving of nonintoxicating beverages for consumption on the premises, no minor shall enter, attempt to enter, or remain in the area. The provisions of this subsection shall not prohibit minors from entering or remaining in an area which has as its main purpose some objective other than the sale or serving of nonintoxicating beverages, in which sales or serving of the beverages are incidental to the main purpose, if the minors are not sold or served or do not consume nonintoxicating beverages anywhere on the premises; however, the incidental service of food in the bar area shall not exempt

minors from the provisions of this subsection.

C. A showing by competent testimony that a minor was found upon premises of a retail dealer shall be prima facie evidence of a violation of Subsection B of this section. (Prior Code, Sec. 2-32, 2-33)

State Law Reference: Similar provisions, 37 O.S. Secs. 241, 243, 246.

SECTION 3-206 SALE OF NONINTOXICATING ALCOHOLIC BEVERAGES TO MINOR PROHIBITED.

It is unlawful for any person, including those who hold a license, to sell and dispense nonintoxicating beverages, or any agent, servant or employee of the license holder, to sell, barter or give to any minor any nonintoxicating beverage. This section shall not apply to a parent as regard his own child or children. (Prior Code, Sec. 2-32)

State Law Reference: Similar provisions, 37 O.S. Sec. 241.

SECTION 3-207 EMPLOYMENT OF PERSONS UNDER MINIMUM AGE, EXCEPTIONS.

A. It is unlawful for any person under the minimum age established by state law to be employed or permitted to work, in any capacity whatsoever, in a place where nonintoxicating beverages are sold or dispensed for consumption on the premises.

B. It is unlawful for any person under the minimum age established by state law to be employed or permitted to work, in any capacity whatsoever, in the separate or enclosed bar area of a place where the main purpose of the area is the sale or consumption of nonintoxicating beverages. The provisions of this subsection shall not apply to any area which has as its main purpose some objective other than the sale or serving of nonintoxicating beverages, in which sales or serving of the beverages are incidental to the main purpose; however, the incidental service of food in the bar area shall not exempt a holder of a license to sell nonintoxicating beverages for consumption on the premises from the provisions of this subsection.

C. A parent as regards the employment of his own child or children is excepted from the provisions of this section, provided that such employment shall in no capacity whatsoever be related to the selling or dispensing of such beverages.

D. The provisions of Subsection A of this section shall not apply to any business or establishment where sales of the beverages do not exceed twenty-five percent (25%) of the gross sales of the business or establishment. (Prior Code, Sec. 2-32, as amended; Ord.No. 261, 11/23/87,in part)

State Law Reference: 37 O.S. Secs. 241, 243, 246.

SECTION 3-208 SALE OF NONINTOXICATING BEVERAGES PROHIBITED DURING CERTAIN HOURS; EXCEPTION.

A. No retail dealer licensed to sell nonintoxicating beverages shall sell such beverages for consumption on the premises between the hours of 2:00 A.M. Sunday morning and 7:00 A.M. Monday morning or between the hours of 2:00 A.M. and 7:00 A.M. on any other day.

B. No retail dealer of any business selling nonintoxicating beverages, as that term is defined in this chapter, for consumption on the premises, nor any operator, agent, or employee of the retail dealer, shall permit any person, who has in his possession an open container having as its contents a nonintoxicating beverage, to remain in the premises between the hours of 2:15 A.M. to 7:00 A.M. Mondays through Saturdays, or on Sundays after 7:00 A.M.. No person, having in his possession an open container having as its contents a nonintoxicating beverage, shall remain in the premises between the hours of 2:15 A.M. to 7:00 A.M. Mondays through Saturdays, or on Sundays after the hour of 2:15 A.M.. For the purpose of this section, an open container shall mean any receptacle containing nonintoxicating or intoxicating alcoholic beverage, to include the original container of the beverage where the original seal has been broken or opened. (Prior Code, Sec. 2-30)

State Law Reference: City powers to regulate hours, Sunday hours, 37 O.S. Sec. 213.

SECTION 3-209 TRANSPORTATION OF NONINTOXICATING BEVERAGES IN MOVING VEHICLE.

No person shall knowingly transport in any moving vehicle upon a public highway, street or alley within the city any nonintoxicating beverage except in the original container which shall have not been opened and from which the original cap or seal shall have not been removed, unless the opened container be in the rear trunk or rear compartment, which shall include the spare tire compartment in a station wagon or panel truck, or any outside compartment which is not accessible to the driver or any other person in the vehicle while it is in motion. (Prior Code, Sec. 2-37)

State Law Reference: Similar provisions, 37 0.S. Sec. 537.

SECTION 3-210 MINORS IN POSSESSION OF NONINTOXICATING ALCOHOLIC BEVERAGES PROHIBITED WHILE IN PUBLIC.

No minor shall be in possession of any nonintoxicating beverages or beer while such person is upon any public street, building or place.

SECTION 3-211 CONSUMPTION OF NONINTOXICATING ALCOHOLIC BEVERAGES IN PUBLIC PLACES; PENALTY; EXCEPTION.

A. No minor shall consume or possess with intent to consume nonintoxicating beverages in any public place.

B. Any person violating the provisions of this section shall, upon conviction, be guilty of a misdemeanor and shall be punished as provided in Section 1-108 of this code, or by appropriate community service not to exceed twenty (20) hours.

C. The provisions of this section shall not apply when such persons are under the direct supervision of their parent or guardian; but in no instance shall this exception be interpreted to allow such persons to consume such beverages in any place licensed to dispense beer as provided for in Section 163.11 and Title 37 of the Oklahoma Statutes.

State Law Reference: Similar provisions, 37 O.S. Sec. 246.

SECTION 3-212 MISREPRESENTATION OF AGE BY FALSE OR ALTERED DOCUMENTATION.

No person shall represent his age either orally or in writing or by presenting false or altered documentation of age for the purpose of inducing any person to sell him nonintoxicating beverages.

Cross Reference: Misrepresenting age by false documents generally, Sec. 10-508 of this code; intoxicating beverages, Sec. 3-109 of this code.

SECTION 3-213 INSPECTIONS.

City officers may make inspections of all places of business where nonintoxicating beverages are sold, distributed, or dispensed at retail, for the purpose of enforcing the laws and for ascertaining whether the operators thereof are complying with the requirements of the law relating to the handling of nonintoxicating beverages. (Prior Code, Sec. 2-34)

SECTION 3-214 LOCATION OF RETAIL DEALERS.

A. No person shall own, operate, maintain or have any interest in any retail dealer which is located at a place in this city which is forbidden as a location for such store by state laws or city ordinances.

B. The location of a Class I retail dealer is specifically prohibited within three hundred (300) feet from any church property primarily and regularly used for worship services and religious activities, or public school. If any such church or school shall be established within three hundred (300) feet of any licensed premises after such premises had been licensed, this shall not be a bar to renewal of such license by Alcoholic Beverage Laws Enforcement Commission so long as it has been in continuous force and effect. The distance shall be measured from the nearest property line of such church or school to the nearest public entrance door of the premises of such package store or mixed beverage establishment along the street right-of-way line providing the nearest direct route usually travelled by pedestrians between such points. A Class I retail dealer shall not be located on any city block where a church or school is located. (Prior Code, Sec. 2-5, in part)

State Law Reference: Similar provisions, 37 0.S. Sec. 518.2; Location as zoning classification, 37 0.S. Sec. 528.2.

SECTION 3-215 CLASS I RETAIL DEALER REGULATIONS.

No Class I retail dealer licensee may:

1. Sell or otherwise furnish nonintoxicating alcoholic beverages to intoxicated persons or permit an intoxicated person to remain or be about the premises;

2. Permit on the premises gambling, betting, operating of a lottery;

3. Permit the selling, furnishing or drinking of intoxicating liquor on the premises;

4. Permit disorderly conduct, loud or disturbing language on the premises;

5. Permit any person to remain on the licensed premises who exposes to public view any portion of his or her pubic hair, anus, vulva, genitals, or female breasts below a point immediately above the top of the areola;

6. Solicit, induce or request a patron or customer to purchase any alcoholic or nonalcoholic beverage for himself or herself or for any other person or employe not a patron; permit any agent, manager, employee, entertainer, barkeeper,host, hostess, waiter, waitress, or any other person receiving any remuneration for services for the establishment to do the same; or knowingly serve a drink procured in violation of this paragraph;

7. Add or permit any person to add any alcohol or any liquors contains alcohol to any nonintoxicating alcoholic beverage which raises the alcohol content above three and two-tenths percent (3.2%);

8. Permit beverages having an alcoholic content greater than three and two-tenths percent (3.2%) to be sold, offered for sale, kept for sale or given away upon its premises, or in any room or other enclosures adjacent or connected thereto for consumption of the premises.

(Prior Code, Sec. 2-31; Ord. No. 261, 11/23/87)

CHAPTER 3

RESTRICTIONS ON GATHERINGS - MINORS CONSUMING ALCOHOLIC BEVERAGES

Section 3-301 Permitting or allowing gatherings where minors are consuming alcoholic beverages.

SECTION 3-301 PERMITTING OR ALLOWING GATHERINGS WEHRE MINORS ARE CONSUMING ALCOHOLIC BEVERAGES.

A. ***Definitions.*** For purposes of Section 3-301, the following definitions shall apply:

Alcohol means ethyl alcohol, hydrated oxide of ethyl, or spirits of wine, from whatever source or by whatever process produced.

Alcoholic beverage includes alcohol, spirits, liquor, wine, beer, and every liquid or solid containing alcohol, spirits, wine, or beer, and which contains one-half of one (1) percent or more of alcohol by volume and which is fit for beverage purposes either alone or when diluted, mixed, or combined with other substances. This term includes intoxicating beverages and low point beer as defined herein.

Gathering is a party, gathering, or event, where a group of three or more persons have assembled or are assembling for a social occasion or social activity.

Intoxicating Beverage includes beverages containing more than three and two-tenths percent (3.2%) alcohol by weight.

Legal Guardian means

(1) a person who, by court order, is the guardian of the person of a minor; or

(2) a public or private agency with whom a minor has been placed by the court.

Low Point Beer means and includes beverages containing more than one-half of one percent (1/2 of 1%) alcohol by volume, and not more than three and two-tenths percent (3.2%) alcohol by weight, including but not limited to beer or cereal malt beverages obtained by the alcoholic fermentation of an infusion of barley or other grain, malt or similar products.

Minor means any person under twenty-one years of age.

Parent means a person who is a natural parent, adoptive parent, foster parent, or stepparent of another person.

Premises means any residence or other private property, place, or premises, including any commercial or business premises.

Response costs are the costs associated with responses by law enforcement, fire, and other emergency response providers to a gathering, including but not limited to:

(1) salaries and benefits of law enforcement, code enforcement, fire, or other emergency response personnel for the amount of time spent responding to, remaining at, or otherwise dealing with a gathering, and the administrative costs attributable to such response(s);

(2) the cost of any medical treatment for any law enforcement, code enforcement, fire, or other emergency response personnel injured responding to, remaining at, or leaving the scene of a gathering;

(3) the cost of repairing any City equipment or property damaged, and the cost of the use of any such equipment, in responding to, remaining at, or leaving the scene of a gathering; and

(4) any other allowable costs related to the enforcement of this Section.

(B) ***Consumption of Alcohol by Minor in Public Place, Place Open to Public, or Place Not Open to Public.*** Except as permitted by state law, it is unlawful for any minor to: (1) consume at any public place or any place open to the public any alcoholic beverage; or (2) consume at any place not open to the public any alcoholic beverage, unless in connection with the consumption of the alcoholic beverage that minor is being supervised by his or her parent or legal guardian.

(C) ***Hosting, Permitting, or Allowing a Party, Gathering, or Event Where Minors Consuming Alcoholic Beverages Prohibited.***

(a) (1) It is the duty of any person having control of any premises, who knowingly hosts, permits, or allows a gathering at said premises to take all reasonable steps to prevent the consumption of alcoholic beverages by any minor at the gathering. Reasonable steps are controlling access to alcoholic beverages at the gathering; controlling the quantity of alcoholic beverages present at the gathering; verifying the age of persons attending the gathering by inspecting drivers' licenses or other government-issued identification cards to ensure that minors do not consume alcoholic beverages while at the gathering; and supervising the activities of minors at the gathering.

(2) It is unlawful for any person having control of any premises to knowingly host, permit, or allow a gathering to take place at said premises where at least one minor consumes an alcoholic beverage, whenever the person having control of the premises either knows a minor has consumed an alcoholic beverage or reasonably should have known that a minor consumed an alcoholic beverage had the person

taken all reasonable steps to prevent the consumption of an alcoholic beverage by a minor as set forth in subsection(a)(l) of this Section.

(b) This Section shall not apply to conduct involving the use of alcoholic beverages that occurs exclusively between a minor and his or her parent or legal guardian.

(c) Nothing in this Section should be interpreted to prohibit any family activity held in the confines of the family home from providing the use of alcohol to immediate family members within the supervision of parents and guardians. However, if a minor leaves such a family gathering intoxicated and is found in public then said providers of alcohol will be held responsible in the same manner as a non-family gathering.

(d) Nothing in this section should be interpreted to prohibit any religious practice which includes the use of alcohol. However, if a minor leaves such a religious gathering intoxicated and is found to be in public then said providers of alcohol will be held responsible in the same manner as a non-religious gathering.

(e) This Section shall not apply to any premises licensed by the State of Oklahoma to dispense alcoholic beverages.

(f) Penalty. Any person who shall violate the provisions of this Section shall be deemed guilty of an offense against the City and upon conviction thereof shall be punished for violation by fine of Five Hundred Dollars ($500.00) plus all court costs and statutory penalties.

(g) Reservation of Legal Options. Violations of this Section may be prosecuted by the City criminally, civilly, and/or administratively. The City may seek administrative fees and response costs associated with enforcement of this Section through all remedies or procedures provided by statute, ordinance, or law. This Section shall not limit the authority of peace officers or private citizens to make arrests for any criminal offense arising out of conduct regulated by this Section, nor shall they limit the City's ability to initiate and prosecute any criminal offense arising out of the same circumstances necessitating the application of this Section.

(h) *Local Authority.* This Section shall not apply where prohibited or preempted by state or federal law.

INTENTIONALLY LEFT BLANK

PART 4

ANIMALS

CHAPTER 1

GENERAL PROVISIONS

ARTICLE A

ANIMAL REGULATIONS

Section 4-101	Definitions.
Section 4-102	Running at large, owners cited, enclosure.
Section 4-103	Control of animals required, at large.
Section 4-104	Buildings, structures for animals, location.
Section 4-105	Kennels.
Section 4-106	Noisy animals; complaint procedure for animals which disturb, are in violation of code.
Section 4-107	Pasturing in public areas illegal.
Section 4-108	Keeping certain animals–restrictions.

ARTICLE B

VACCINATION

Section 4-121	Rabies vaccination required; certificate of vaccination; tags.

ARTICLE C

IMPOUNDMENT REGULATIONS

Section 4-131	Impoundment, records, disposition of animals.
Section 4-132	Breaking pound or interfering with impounding officers.
Section 4-133	Animal shelter fees.
Section 4-134	Redemption, adoption of animals.

ARTICLE D

CRUELTY TO ANIMALS

Section 4-141	Cruelty to animals.
Section 4-142	Poisoning animals.
Section 4-143	Encouraging animals to fight.

ARTICLE E

ZONING ORDINANCE

Section 4-151	Zoning ordinance to prevail.

ARTICLE F

RABIES AND ANIMAL BITES

Section 4-161	Animal bites; rabies examination; quarantine.
Section 4-162	Rabies diagnoses; quarantine of City; time limit.
Section 4-163	Killing or removing rabid animal prohibited.
Section 4-164	Reports of bite cases; report by veterinarian.
Section 4-165	Investigations for violation of chapter.
Section 4-166	Records.

ARTICLE G

VICIOUS, DANGEROUS AND DISEASED ANIMALS

Section 4-171	Keeping unlawful.
Section 4-172	Summons and complaint.
Section 4-173	Impoundment.
Section 4-174	Hearing.
Section 4-175	Determination.

ARTICLE H

PENALTY

Section 4-181	Penalty.

CHAPTER 2

Reserved

CHAPTER 1

GENERAL PROVISIONS

ARTICLE A

ANIMAL REGULATIONS

Section 4-101	Definitions.
Section 4-102	Running at large, owners cited, enclosure.
Section 4-103	Control of animals required, at large.
Section 4-104	Buildings, structures for animals, location.
Section 4-105	Kennels.
Section 4-106	Noisy animals; complaint procedure for animals which disturb, are in violation of code.
Section 4-107	Pasturing in public areas illegal.
Section 4-108	Keeping certain animals–restrictions.

ARTICLE B

VACCINATION

Section 4-121	Rabies vaccination required; certificate of vaccination; tags.

ARTICLE C

IMPOUNDMENT REGULATIONS

Section 4-131	Impoundment, records, disposition of animals.
Section 4-132	Breaking pound or interfering with impounding officers.
Section 4-133	Animal shelter fees.
Section 4-134	Redemption, adoption of animals.

ARTICLE D

CRUELTY TO ANIMALS

Section 4-141	Cruelty to animals.
Section 4-142	Poisoning animals.
Section 4-143	Encouraging animals to fight.

ARTICLE E

ZONING ORDINANCE

Section 4-151 Zoning ordinance to prevail.

ARTICLE F

RABIES AND ANIMAL BITES

Section 4-161 Animal bites; rabies examination; quarantine.
Section 4-162 Rabies diagnoses; quarantine of City; time limit.
Section 4-163 Killing or removing rabid animal prohibited.
Section 4-164 Reports of bite cases; report by veterinarian.
Section 4-165 Investigations for violation of chapter.
Section 4-166 Records.

ARTICLE G

VICIOUS, DANGEROUS AND DISEASED ANIMALS

Section 4-171 Keeping unlawful.
Section 4-172 Summons and complaint.
Section 4-173 Impoundment.
Section 4-174 Hearing.
Section 4-175 Determination.

ARTICLE H

PENALTY

Section 4-181 Penalty.

ARTICLE A

ANIMAL REGULATIONS

SECTION 4-101 DEFINITIONS.

A. As used in this chapter:

1. "Animal shelter" means the person or person employed by the City as its enforcement officer in the impoundment of animals, controlling of animals running at large, and as otherwise provided or required in this chapter.

2. "At large" or "running at large' means any animal when it is off the property of its owner and not under the control of a competent person. As applied to dogs, "at large" or "running at large" means:

   (a) Off-premises: any dog which is not restrained by means of a leash or chain of sufficient strength and not more than six (6) feet in length to control the actions of such animal while off the owner's property; and,

   (b) On-premises: any dog not confined within the owner's property by a substantial fence of sufficient strength and height to prevent the animal from escaping therefrom, or secured on the premises by a metal chain or leash sufficient in strength to prevent the animal from escaping from the owner's property and so arranged so that the animal will remain upon the property when the leash is stretched to full length. A dog intruding upon the property of another person other than the owner shall be termed running at large. Any animal within an automobile or other vehicle of its owner or owner's agent shall not be deemed running at large.

4. "Confined on the premises" means that condition in which an animal is securely and physically confined and restrained on and within the premises of the owner by means of walls, fences, rope, chain, leash, or other device of such strength and size as to physically prevent the animal from leaving the premises and to physically prevent the animal from causing physical injury to persons or other animals which are off premises upon which the confined animal is located;

5. "Dangerous animal" means an animal that, without provocation, has chased or approached in either a menacing fashion or in an apparent attitude of attack, or has attempted to bite or otherwise endanger any person or other animal while the animal alleged to be dangerous is off the premises of the

owner or while the animal is not physically retained or confined on the premises. Dangerous animal does not include a police dog while the police dog is being used to assist law enforcement officers in the performance of their duty;

6. "Diseased animal" means an animal believed to be infected with a dangerous or communicable disease;

7. "Domestic birds" means canaries, parrots, parakeets, myna birds, peacocks, birds of paradise, or other birds tamed to the household or pertaining thereto;

8. "Enclosure" means while on the property of the owner secure confinement indoors, or in a securely enclosed and locked pen or structure, suitable to prevent entry and designed to prevent the animal from escaping.

9. "Exposed to rabies" means any animal that has been bitten by or expose to any other animal known to have been infected with rabies;

10. "Fowl" means chickens, guineas, geese, ducks, and pigeons;

11. "Impoundment" means placing an animal in the animal control vehicle or unit, or holding an animal in custody at the animal control shelter;

12. "Keeper" means any person, family, firm, or corporation owning or actually keeping, having, using, or maintaining any of the animals herein referred to;

13. "Kennel" means any place where three (3) or more dogs more than six (6) months of age are kept, sheltered, or fed and watered for sale, exchange, breeding, or training purposes. Kennel includes any place where more than one litter of puppies born to different female dogs are kept on any lot or premises or kept in any structure.

(This page intentionally left blank)

14. "Large animal" means horse, mule, donkey, cattle, goat, sheep or any other animal of similar size or stature;

15. "Menacing fashion" means that an animal would cause any person observing the animal to reasonably believe that the animal will cause physical injury to persons or other animals;

16. "Muzzle" means a device constructed of strong, soft material or a metal muzzle such as that used commercially with greyhounds. The muzzle must be made in a manner which will not cause injury to the animal or interfere with its vision or respiration, but must prevent it from biting any person, animal or livestock;

17. "Neuter" means to render a male dog or cat unable to reproduce;

18. "Nuisance" means the conduct or behavior of any small or large animal, cat or dog which molests passersby or passing vehicles; attacks other animals; damages private or public property; barks, whines, howls, crows or makes other noises in an excessive, continuous fashion which annoys the comfort, repose, health or safety of the people in the community; unconfined in season; or a vicious animal not confined as required by this chapter;

19. "Owner" or "keeper" means any person, group of persons or corporation owning, keeping, maintaining or harboring, or having care or custody of, an animal or animals or fowl or birds;

20. "Permit" means the permit issued by the city clerk;

21. "Provoke" or "provocation" means, with respect to an attack by an animal, that the animal was hit, kicked or struck by a person with an object or part of a person's body or that any part of the animal's body is pulled, pinched or squeezed by a person;

22. "Ratproof" means that state of being constructed so as to effectively prevent entry of rats;

23. "Restraint" means that an animal is controlled by leash or tether, either of which shall not exceed six (6) feet in length, by a competent person or within any vehicle, trailer or other conveyance being driven, pulled or parked on the street, or confined within the property limits of its owner or keeper;

24. "Sanitary" means any condition of good odor and cleanliness which precludes the probability of disease transmission and insect breeding and which preserves the health of the city;

25. "Severe injury" means any physical injury that results in broken bones or disfiguring lacerations requiring multiple sutures or cosmetic surgery;

26. "Small animal" means rabbit, hare, guinea pig, chinchilla, turkey, fowl, hamster, pigeon (except homing pigeons) or any other animal of similar size or stature;

27. "Spay" means to remove the ovaries of a female dog or cat in order to render the animal unable to reproduce;

28. "Vaccination" means an injection of United States Department of Agriculture approved rabies vaccine administered every twelve (12) calendar months by a licensed veterinarian; and

29. "Vicious animal" means an animal that, without provocation, has killed or caused physical injury to any person or has killed or caused physical injury to another animal. Vicious animal does not include a police dog while the police dog is being used to assist law enforcement officers in the performance of their official duties and where any injury inflicted by the police dog was reasonably related to the duties being performed;

30. "Without provocation" means that an animal was not teased, tormented or abused; and also means where the animal was not protecting its owner or owner's property from criminal activity by a perpetrator of a crime.

B. All other words or phrases used herein shall be defined and interpreted according to their common usage. (Prior Code, Secs. 3-1, 3-11, in part; Ord. No. 278, 6/26/89, in part)

State Law Reference: City powers to regulate animals, 11 O.S. Sec. 22-115.

SECTION 4-102 RUNNING AT LARGE, OWNERS CITED, ENCLOSURES.

A. Any animal, including fowl, but except a cat, running at large in the city shall be taken up by the animal control officer and impounded at the animal shelter. The animal control officer may, at his discretion, cite the owner of such animal to appear in municipal court to answer charges of violation of this chapter.

B. Every person who owns or has charge of a large animal within the city shall be required to keep the domestic animal within a suitable enclosure and to restrain the animal from running at large. (Prior Code, Sec. 3-2, in part)

SECTION 4-103 CONTROL OF ANIMALS REQUIRED, AT LARGE.

It is unlawful for any owner or person to:

1. Fail to prevent any animal from running at large within the city;

2. Perform, do or carry out any inhumane treatment against any animal;

3. Keep, possess, own, control, maintain, use or otherwise exercise dominion over any animal or animals which by reason of noise, odor or sanitary conditions become offensive to a reasonable and prudent person of ordinary tastes and sensibilities, or which constitute or become a health hazard as determined by the health officer or animal control officer; or

4. Turn any animal at large or release an animal which is restrained or confined in an enclosure as required by this chapter.
(Prior Code, Sec. 3-3 in part)

SECTION 4-104 BUILDINGS, STRUCTURES FOR ANIMALS, LOCATION.

A. Every building or place where any animal or fowl is kept shall be constructed of such material and in such manner that it can be kept clean and sanitary at all times.

B. No place where an animal is kept shall be kept closer than forty (40) feet to the premises of an apartment, hotel, restaurant, boarding house, food store, building used for educational, religious or hospital purposes, or dwelling other than that occupied by the owner or occupant of the premises upon which the animal is kept.

C. Every building where any livestock is kept, if located within two hundred (200) feet of any apartment, hotel, restaurant, boarding house, food store, building used for educational, religious or hospital purposes, or any dwelling other than that occupied by the owner or occupant of the premises upon which the animal is kept, shall be provided with a watertight and flytight receptacle for manure, of such size as to hold all accumulation of manure. The receptacle shall be emptied sufficiently often and in such manner as to prevent it from being or becoming a nuisance, and shall be kept covered at all times except when open during the deposit or removal of manure or refuse. No manure shall be allowed to accumulate on such premises except in the receptacle.

D. The animal control officer or health officer shall inspect any structure or place where an animal is kept on his own initiative or upon complaint. He may issue any such reasonable order as he may deem necessary to the owner of such animal to cause the animal to be kept as required in this chapter or in a manner so as not to constitute a nuisance. He may make a complaint before the city court against any person for violation of any provision of this chapter, or of any such reasonable order. (Prior Code, Secs. 3-6 through 3-10)

SECTION 4-105 KENNELS.

A. It is unlawful for any person to have, run, maintain or operate any kennel or any place for the sale, exchange, breeding and training of pet animals within the city or for either of the purposes, without first obtaining an annual license from the city to operate such a kennel or place.

B. The requirements of this chapter on tags and registration of animals shall not apply to animals within a licensed kennel.

C. A kennel license shall not authorize any kennel pet animal to run at large, but all such pets shall be registered, vaccinated and tagged in the same manner as other pets when the same are permitted to run at large.

D. The license fee for an annual kennel license shall be as set by the council by motion or resolution.

E. Kennels maintained and operated within the city shall be maintained in a sanitary condition under standards set by the United States Department of Agriculture relating to kennels. The kennels shall be subject to an annual inspection by the United States Department of Agriculture and the city animal control officer.

SECTION 4-106 NOISY ANIMALS; COMPLAINT PROCEDURE FOR ANIMALS WHICH DISTURB, ARE IN VIOLATION OF CODE.

A. No person shall keep any animal which causes frequent or long-continued noise or otherwise so as to disturb the comfort or repose of any person in the vicinity. Any violation of this section is declared to be a nuisance and as such may be abated.

B. Any person with knowledge thereof may file a complaint in the Municipal Court against the owner or keeper of an animal which disturbs the comfort or repose of any person in the vicinity, or which is in violation of this Chapter. If the Court finds that an animal is a nuisance or in violation of this Chapter, then the Court may order the owner or keeper to prevent and abate the nuisance, or order the animal impounded with the owner or keeper to pay impoundment costs, or other punishment as provided in Section 1-108 of this Code.

SECTION 4-107 PASTURING IN PUBLIC AREAS ILLEGAL.

It is unlawful for any person to pasture any animal on any public property or private property without the consent of the person owning or controlling the property.

SECTION 4-108 KEEPING CERTAIN ANIMALS - RESTRICTIONS

The raising or keeping of animals or poultry in a residential "R" district shall be in accordance with all ordinances of the City of Piedmont and the following:

A. There shall be provided a fenced area of not less than twenty thousand (20,000) square feet exclusive of the area covered by main buildings and required front and side yards, for each large animal, including horses, cattle, and sheep; and all structures and buildings for the care and protection of animals shall be located not closer than twenty (20) feet to a side or rear lot line, and no closer than sixty (60) feet to any residence (other than the residence of the owner of the tract of land where the large animals are kept).

B. Except as provided in subsection E, large animals shall not be kept on tracts smaller than one acre. On tracts of one acre up to two and one-half acres one large animal per acre may be kept, provided not more than two animals shall be kept on any tract of land less than two and one-half acres in size.

C. On a tract of land at least two and one-half acres in size three large animals may be kept. For lots or tracts greater than two and one-half acres but less than five acres, one large animal may be kept for each additional acre over two and one-half. On a tract of land greater than four and one-half acres but less than five acres a maximum of five large animals may be kept.

D. The keeping of pigs is prohibited,

E. The keeping of one horse on a tract of land at least three-fourths (3/4) acre in size may be permitted as a "use permitted on review", as provided in Section 7-4 of the Piedmont Zoning Ordinance under the following conditions:

(1) There shall be provided a fenced area of not less than twenty thousand (20,000) square feet exclusive of the area covered by main buildings and required front and side yards, for the horse; and all structures and buildings for the care and protection of the horse shall be located not closer than twenty (20)

feet to a side or rear lot line, and no closer than sixty (60) feet to any residence (other than the residence of the owner of the tract of land where the horse is kept).

(2) The area designated herein for keeping of one horse shall be fenced with material adequate to keep the horse on the owner's property. In addition to the perimeter or property line fence the area where the horse is kept shall be restrain the horse away from fences, trees, shrubs, or other property of adjoining owners, and restraining the horse to a minimum distance of sixty (60) feet from any residence other than the residence of the owner of the land where the horse is kept.

(3) The premises where a horse is kept shall be maintained in a clean and sanitary manner.

(4) Upon a finding by the City Council that the keeping of the horse does not adversely affect the surrounding property owners.

(5) The City will conduct periodic inspections of the premises where the horse is located; and a violation of any of these conditions will constitute grounds for revocation of the Use Permitted on Review permit.

F. The area designated herein as appropriate for keeping of large animals shall be fenced with material adequate to keep the large animals on the owner's property. In addition to the perimeter or property line fence the area where the large animals are kept shall be equipped with a temporary restraint system such as an "electric fence" or "hot wire" placed so as to retrain the horse away from fences, trees, shrubs, or other property of adjoining owners, and restraining the horse to a minimum distance of sixty (60) feet from any residence other than the residence of the owner of the land where the large animals are kept.

G. The premises where large animals are kept shall be maintained in a clean and sanitary manner.

H. For purposes of this subsection large animals shall include horses, cattle, sheep, goats, and other similar animals. Foals, calves, lambs, etc. shall not be considered large animals until they become weaned.

I. These regulations do not apply to tracts of land five (5) acres in size or larger.

ARTICLE B

REGISTRATION AND VACCINATION OF ANIMALS

SECTION 4-121 RABIES VACCINATION REQUIRED; CERTIFICATE OF VACCINATION; TAGS.

A. No person shall own, keep, or harbor any dog or cat within the City limits unless such dog or cat four (4) months of age or older is vaccinated for rabies annually and in any event before the cat or dog becomes six (6) months of age.

B. Unless the owner of any dog or cat furnishes written proof that the dog or cat has been vaccinated for rabies by a licensed veterinarian in the past twelve (12) months, the owner shall be guilty of an offense.

C. Every veterinarian, after vaccinating a dog or cat for rabies, shall issue a legible certificate, one copy to be retained by the veterinarian and one copy to be retained by the animal owner; and upon request, shall show such certificate to the City. Such certification shall include the following information:

1. Owner's full name, address, zip code, and telephone number.

2. Breed, date of birth, sex, and color or marking of the dog or cat.

3. Type of vaccine and duration of immunity.

4. Signature of the veterinarian or other authorized person administering the vaccination.

5. Name of the animal, if applicable.

D. When a veterinarian vaccinates a dog or cat against rabies, he shall issue to the owner of such dog or cat a metal tag or check evidencing such vaccination and the year of vaccination.

E. It shall be the duty of the owner of the dog or cat to attach the tag or check issued to him pursuant to Subsection D to the dog or cat, and it shall be unlawful for any person to remove such tag or check without the owner's consent. (Prior Code, Sec. 3-12, 3-13, in part).

State Law Reference: City's power to regulate dogs, 11 O.S. Sec. 22-115.

ARTICLE C

IMPOUNDMENT REGULATIONS

SECTION 4-131 IMPOUNDMENT RECORD, DISPOSITION OF ANIMALS.

A. The city may contract with an outside agency to serve as the city's animal shelter or pound to provide for the impoundment of animals pursuant to this chapter. In addition, the city may contract with an outside agency for the disposition of certain animals.

B. Any dog or cat or other animal found running at large shall be picked up and immediately impounded in the animal shelter and there confined in an humane manner.

C. The city animal control officer, upon receiving an animal for impoundment shall record or cause to be recorded the description, breed, color and sex of the animal and the name and address of the owner as may be shown on applicable city animal control records. If the owner is known, the officer shall:

1. Notify the owner at an address or telephone number available to the city; or

2. Leave a notice with a member of the owner's family, or other person residing at the owner's home, as shown in the city's records, over the age of fifteen (15) years,

to notify the owner that unless reclaimed within forty-eight (48) hours after impoundment, Saturdays, Sundays and city holidays excluded, the animal will be destroyed or otherwise disposed of.

(Prior Code, Secs. 3-16; Ord. No. 259, 11/23/87)

SECTION 4-132 BREAKING POUND OR INTERFERING WITH OFFICERS.

A. If any person breaks open, or in any manner directly or indirectly aids in, or counsels or advises the breaking open of any city pound or contract pound, or hinders, delays or obstructs any person duly authorized in taking up or taking to the city pound any animal liable to be impounded, he shall be guilty of an offense.

B. No person shall interfere with, or hinder, or molest any agent of the city in the performance of any duty of such agent, or seek to release any animal in the custody of the city or its agents, except as provided by law.

SECTION 4-133 ANIMAL SHELTER FEES.

A. Fees for impounding and keeping an animal, to be paid upon redemption, are as set by the city council by motion or resolution. In computing a fee, a fraction of a day during which an animal or fowl has been fed shall be deemed a full day.

B. Any person redeeming an impounded animal or fowl shall pay the fees to the city clerk and present the receipt therefor to the person in charge of the animal shelter before the latter releases the animal or fowl.

C. Any dog or cat not vaccinated against rabies being held or impounded by the city shall not be released to the owner or any other person without proof of current vaccination against rabies or without paying a deposit in such sum as is set by the city, which deposit shall be refunded to the person putting up the same upon proof of current vaccination being shown to the animal control officer within seventy-two (72) hours of the release of the animal. If such proof is not presented, then the animal control officer may retake the animal into custody and deposit the deposit with the city treasurer to be retained as expenses of taking the animal into custody.

D. In addition to the above fees, any person requesting impoundment or disposal of an animal by the shelter shall pay a fee for such service as set by the council by motion or resolution.

E. No dog or cat suffering from rabies or other infectious or dangerous disease may be released from the animal control shelter. (Prior Code, Sec. 3-16, in part; Ord. No. 259, 11/23/87)

SECTION 4-134 REDEMPTION, ADOPTION, OF ANIMAL.

A. An owner of an impounded animal or his agent may redeem the animal prior to its sale or destruction as provided for herein by paying the required fees against the animal and meeting any other requirements which may be prescribed in this chapter. If the owner or his agent has not redeemed the animal within the time prescribed in this chapter after the impoundment of the animal, the animal may be otherwise disposed of as provided for herein.

B. A person desiring to adopt an animal from impoundment shall pay an adoption fee, costs of any necessary vaccinations, and a deposit of Ten Dollars ($ 10.00) to guarantee the neutering or spaying of the dog or cat, and shall sign an agreement with the city ensuring that the dog or cat will be spayed or neutered. (Ord. No. 259, 11/23/87)

ARTICLE D

CRUELTY TO ANIMALS

SECTION 4-141 CRUELTY TO ANIMALS.

It is unlawful for any person, wilfully and maliciously, to pour on, or apply to, any animal any drug or other thing which inflict pain on the animal; or to knowingly treat an animal in a cruel or inhumane manner; or to knowingly neglect an animal belonging to him or in his custody in a cruel or inhumane manner. (Prior Code, Sec. 3-19)

SECTION 4-142 POISONING ANIMALS.

It is unlawful for a person wilfully to poison any dog or other animal except a noxious, nondomesticated animal, or to knowingly expose poison so that the same may be taken by an animal. (Prior Code, Sec. 3-20)

SECTION 4-143 ENCOURAGING ANIMALS TO FIGHT.

It is unlawful for any person to instigate or encourage a fight between animals or to encourage one animal to attack, pursue or annoy another animal except a noxious, nondomesticated animal, or to keep a house, pit or other place used for fights between animals. (Prior Code, Sec. 3-21)

ARTICLE E

ZONING ORDINANCE

SECTION 4-151 ZONING ORDINANCE TO PREVAIL.

In case of any conflict between the provisions of this chapter and the zoning ordinance, the zoning ordinance shall prevail.

Cross Reference: See Sections 12-201 et seq on the zoning ordinance.

ARTICLE F

RABIES AND ANIMAL BITES

SECTION 4-161 ANIMAL BITES; RABIES EXAMINATION; QUARANTINE.

A. Every animal that bites or scratches a person shall be reported within four (4) hours to the animal control officer and shall thereupon be securely quarantined at a veterinarian hospital for a period of ten (10) days from the date the person was bitten, and shall not be released from such quarantine except by permission of the animal control officer of the city and the veterinarian in charge of the quarantined animal. Such quarantine may be at any veterinarian hospital chosen by the owner. Failure of the owner or keeper to quarantine his animal within the four-hour period herein will make him guilty of an offense.

B. The owner, upon demand by any city officer or animal control officer, shall surrender any animal that has bitten or scratched a human, or which is suspected as having been exposed to rabies, for supervised quarantine testing or euthanasia, the expense for which shall be borne by the owner; and the animal may be reclaimed by the owner if adjudged free of rabies. (Prior Code, Sec. 3-15, in part)

SECTION 4-162 RABIES DIAGNOSES; QUARANTINE OF CITY; TIME LIMIT.

A. When an animal under quarantine has been diagnosed as being rabid, or suspected by a licensed veterinarian as being rabid, and dies while under such observation, the animal control officer or veterinarian shall immediately send the head of such animal to the state health department for pathological examination, and shall notify the property public health officer of reports of human contacts and diagnosis made of the suspected animal.

B. When one or both reports give a positive diagnosis of rabies, the health or animal control officer of the city may recommend a citywide quarantine for a period of six (6) months; and upon the invoking of such quarantine, no animal shall be taken into the streets or permitted to be in the streets during such period of quarantine. During such quarantine, no animal shall be taken or shipped from the city without written permission of the animal control officer of the city.

C. During such period of rabies quarantine as herein designated, every animal bitten by an animal adjudged to be rabid shall be treated for such rabies infection by a licensed veterinarian, or held under six (6) months quarantine by the owner in the same manner as other animals are quarantined.

D. In the event there are additional positive cases of rabies occurring during the period of quarantine, such period of quarantine may be extended for an additional six (6) months.

State Law Reference: State quarantine of animals, 63 O.S. Sec. 1-508.

SECTION 4-163 KILLING OR REMOVING RABID ANIMAL PROHIBITED.

A. No person shall kill or cause to be killed any rabid animal, any animal suspected of having been exposed to rabies, or any animal biting or scratching a human, except as herein provided, nor to remove the animal from the city limits without written permission from the health officer of the city, or the animal control officer.

B. The carcass of any dead animal exposed to rabies shall upon demand be surrendered to the animal control officer.

C. The animal control officer shall direct the disposition of any animal found to be infected with rabies.

D. No person shall fail or refuse to surrender any animal for quarantine or destruction as required herein when demand is made therefor by an employee empowered to enforce this chapter. Such refusal shall be deemed an offense.

SECTION 4-164 REPORTS OF BITE CASES; REPORT BY VETERINARIAN.

A. It is the duty of every physician, veterinarian or other practitioner to report to the animal control officer the names and addresses of persons treated for bites inflicted by animals, together with such other information as will be helpful in rabies control.

B. It is the duty of every licensed veterinarian to report to the animal control officer his diagnosis of any animal observed by him to be a rabid suspect.

SECTION 4-165 INVESTIGATIONS FOR VIOLATION OF CHAPTER.

A. For the purpose of discharging the duties imposed by this chapter and to enforce its provisions, the animal control or health officers are empowered to call upon the residents of any premises upon which a dog or cat or small animal is kept or harbored, and to demand the exhibition by the owner of such dog or cat or small animal.

B. The animal control or health officer, in the manner authorized by law, may enter the premises where any animal is kept in a reportedly cruel or inhumane manner and demand to

examine such animal, and to take possession of such animal when, in his opinion, it requires humane treatment. The officer may demand, at the front door of any residence, exhibition by the owner of current animal licenses at any time.

SECTION 4-166 RECORDS.

The animal control officer shall keep or cause to be kept:

1. An accurate and detailed record of the licensing, impounding and disposition of all animals coming into his custody; and

2. An accurate and detailed record of all bite cases reported to the city, with a complete report of the investigation of each case.

ARTICLE G

VICIOUS, DANGEROUS AND DISEASED ANIMALS

SECTION 4-171 KEEPING UNLAWFUL.

The keeping of vicious, dangerous or diseased animals within the city is unlawful except as may be permitted in this article. (Ord. No. 278, 6/26/89)

SECTION 4-172 SUMMONS AND COMPLAINT.

A. Any person who witnesses or has personal knowledge that an act or acts made unlawful by this article has been committed may sign a complaint against the alleged violator.

B. Any police officer, animal control officer, or code enforcement officer who is employed by the city is authorized to issue a summons and complaint when the officer personally observes a violation of this article.

C. The complainant must provide a sworn complaint to the officer receiving the complaint containing the following information:

1. Name, address and telephone number of the complainant and other witnesses to the incident;

2. Date, time and location of the incident;

3. Description of the animal;

4. Name, address and telephone number (if known) of the animal owner;

5. A statement that the animal attacked the complainant or some other person or animal as witnessed by the complainant, or such facts as warrant a finding that the animal is vicious, dangerous or diseased; and

6. Other facts and circumstances of the incident.
(Ord. No. 278, 6/26/89)

SECTION 4-173 IMPOUNDMENT.

It is the duty of the animal control officer upon receipt of a verified complaint as outlined in this article to cause the animal involved to be impounded pending a determination as required in this article. Any and all expenses associated with the impounding, including shelter, food, handling and veterinary care, shall be borne by the owner of the animal during the period of impoundment. (Ord. No. 278, 6/26/89)

SECTION 4-174 HEARING.

The municipal judge, in addition to any hearings which may be required on criminal charges, shall hold a hearing within ten (10) days of the date of impoundment to determine if the animal is vicious, dangerous or diseased as defined by this code. The hearing maybe held in conjunction with any criminal proceedings if so ordered by the judge, but in no event shall this delay the hearing on determination of viciousness. (Ord. No. 278, 6/26/89)

SECTION 4-175 DETERMINATION.

The municipal judge shall be empowered to make one of the following determinations as a result of the hearing:

1. That the animal is in fact not vicious, dangerous or diseased, in which event the animal control officer shall cause it to be surrendered to the owner of the animal, upon payment by the owner of the expenses outlined in this article;

2. That the animal is in fact vicious, dangerous or diseased, and should be destroyed;

3. That the animal is vicious, dangerous or diseased but that for good cause shown, the animal should not be destroyed, in which event the judge shall order one of the following:

a. That the animal be immediately removed from the corporate limits of the city and not to ever be again allowed within the corporate limits of the city, and that the owner shall pay all fees required;

b. That the owner be allowed to maintain the vicious animal within the corporate limits of the city under the conditions specified in this paragraph:

i. Payment of all fees required in this article;

ii. That the animal be leashed and muzzled. No person covered by this requirement shall permit the animal to go outside its kennel or pen unless the animal is securely leashed with a leash no longer than four (4) feet in length. No person shall permit the animal to be kept on a chain, rope or other type of leash outside its kennel or pen unless a person is in physical control of the leash. Such animal may not be leashed to inanimate objects such as trees, posts, buildings, etc. In addition, all animals on a leash outside the animal's kennel must be muzzled by a muzzling device sufficient to prevent such animal from biting persons or other animals;

iii. That the animal be confined. All animals covered by this requirement shall be securely confined indoors or in a securely enclosed and locked pen or kennel, except when leashed and muzzled as above provided. Such pen, kennel, or structure must have secure sides and a secure top attached to the sides. All structures used to confine such animal must be locked with a key or combination lock when the animal is within the structure. Such structure must have a secure bottom or floor attached to the sides of the pen or the sides of the pen must be embedded in the ground no less than two (2) feet. All structures erected to house the animals must comply with all zoning and building regulations of the city. All such structures must be adequately lighted and ventilated, and kept in a clean and sanitary condition;

iv. That the animal be confined indoors. No animal covered by this requirement may be kept on a porch, patio or in any part of a house or structure that would allow the animal to exit such building on its own volition. In addition, no such animal may be kept in a house or structure when the windows or screen doors are the only obstacle preventing the animal from exiting the structure;

v. That a warning sign be displayed. All owners, keepers or harborer of animals covered by this requirement shall display in a prominent place on the premises where the animal is kept a sign easily readable by the public using the words "BEWARE OF VICIOUS ANIMAL". In addition, a similar sign is required to be posted on the kennel or pen of such animal;

4. An owner whose animal is adjudged to be vicious at the hearing and sentence is imposed by the judge pursuant to this section, upon written demand, may appeal the judge's decision within ten (10) days to the district court of the county in the same manner as other appeals from actions of the municipal court. (Ord. No. 278, 6/26/89)

ARTICLE H

PENALTY

SECTION 4-181 PENALTY.

Any person violating any of the provisions of this chapter shall, upon conviction thereof, be punished as provided in Section 1-108 of this code. (Prior Code, Sec. 3-22)

CHAPTER 2

(RESERVED)

PART 5

BUILDINGS REGULATIONS AND CODES

CHAPTER 1

LICENSES AND FEES; PERMITS, BOND, AND INSURANCE

ARTICLE A

LICENSE FEES

Section 5-101	License required for contractors and journeymen.
Section 5-102	Fees specified.
Section 5-103	Term of initial license.
Section 5-104	Licensee prohibited from engaging in activities beyond scope of license and restrictions.

ARTICLE B

PERMITS AND INSPECTIONS

Section 5-121	Building permits.
Section 5-122	Expiration of permits.
Section 5-123	Plumbing, electrical, mechanical and other permits.
Section 5-124	Schedule of permit and inspection fees.
Section 5-125	Display of permits.
Section 5-126	Revocation.
Section 5-127	Building permits, fees, insurance, and exemptions.
Section 5-128	Permit fees assessed in addition to existing inspection fees.
Section 5-129	Building permits for accessory buildings.

ARTICLE C

OTHER REGULATIONS

Section 5-141	Right to enforce and stop construction.
Section 5-142	Cases of urgency.
Section 5-143	Power to make rulings.
Section 5-144	Power to call upon police or fire department.
Section 5-145	Power to enter.
Section 5-146	Penalty.
Section 5-147	Relief in the courts.
Section 5-148	Effect of violation by corporate officers and agents.
Section 5-149	Conviction to be deemed cause for revocation of licenses, certificates.

CHAPTER 2

BUILDING CODE AND REGULATIONS

ARTICLE 1

BUILDING CODE

Section 5-201	Adoption of building code.
Section 5-202	Amendment to building code.
Section 5-203	Provisions declared to be minimum requirements.
Section 5-204	Adoption of existing building code.
Section 5-205	Enforcement.
Section 5-206	Swimming pool permits.
Section 5-207	Adoption of residential code.
Section 5-208	Amendments to residential code.
Section 5-209	Adoption of property maintenance code.
Section 5-210	Adoption of accessible and useable buildings and facilities code.

ARTICLE B

MOVING BUILDINGS

Section 5-221	Relocation of buildings.
Section 5-222	Permit required to move building.
Section 5-223	Application for permits.
Section 5-224	Permit fees.
Section 5-225	Bond required.
Section 5-226	Procedures for permits, approval, disapproval.
Section 5-227	Interference with trees and fixtures.
Section 5-228	Interference with poles and wires.
Section 5-229	Safety precautions and protection of property.
Section 5-230	Time limit.
Section 5-231	Moving buildings through city.
Section 5-232	New infrastructure use fee.

CHAPTER 3

PLUMBING CODE AND REGULATIONS

ARTICLE A

GENERAL PROVISIONS

Section 5-301	Plumbing code adopted.
Section 5-302	Amendments to the plumbing code.

Section 5-303 Administration
Section 5-304 Dangerous and unsanitary construction.
Section 5-305 Violations and penalties.
Section 5-306 Adoption of private sewer disposal code.
Section 5-307 Amendments to private sewage disposal code.

ARTICLE B

PLUMBERS' REGISTRATION

Section 5-311 Definitions.
Section 5-312 License and registration required; regulations.
Section 5-313 Registration fee, surety bond.
Section 5-314 Issuance of plumbers' registration certificates.

CHAPTER 4

ELECTRIC CODE

ARTICLE A

GENERAL PROVISIONS

Section 5-401 Adoption of National Electric Code.
Section 5-402 Provisions declared to be minimum requirements.
Section 5-403 Electrical installation permit required; exception.
Section 5-404 Inspection, not to conceal.
Section 5-405 Denial of permit; certificate of inspection, utility companies.
Section 5-406 Wiring protection; when inspected.
Section 5-407 Defective workmanship and materials.
Section 5-408 Inspection no relief from responsibility.

ARTICLE B

ELECTRICAL CONTRACTORS AND ELECTRICIANS REGISTRATION

Section 5-421 Definitions.
Section 5-422 Registration required.
Section 5-423 Classification of registration certificate.
Section 5-424 Registration fee, annual renewal fee.
Section 5-425 Journeyman electrician's registration certificate.
Section 5-426 Electrical apprentice's registration certificate.

CHAPTER 5

MECHANICAL CODE

ARTICLE A

GENERAL PROVISIONS

Section 5-501	Adoption of BOCA National Mechanical Code
Section 5-502	Amendments to the Mechanical Code.
Section 5-503	Permits.
Section 5-504	Provisions declared to be minimum requirements.
Section 5-505	Mechanical official.
Section 5-506	Violations and penalties.

ARTICLE B

REGISTRATION

Section 5-511	Definitions.
Section 5-512	License and registration required.
Section 5-513	Registration fee, surety bond.
Section 5-514	Issuance of registration certificates.

CHAPTER 5A

COMMUNICATIONS TOWERS

Section 5A-501	Definitions.
Section 5A-502	Exclusion and application process.
Section 5A-503	Criteria for review of applications.
Section 5A-504	Facility requirements.
Section 5A-505	Television and radio broadcast towers.
Section 5A-506	Height of communication tower.

CHAPTER 6

FIRE PREVENTION CODE

Section 5-601	Adoption of fire prevention code.
Section 5-602	Fire prevention.
Section 5-603	Amendments to fire code.
Section 5-604	Provisions declared to be minimum requirements.
Section 5-605	Modifications of the fire prevention code authorized.
Section 5-606	New materials, processes, or occupancies which may require permits.

Section 5-607 Appeals.
Section 5-608 Life safety code adopted.
Section 5-609 Liquefied petroleum gas code adopted, penalty.
Section 5-610 Adoption of fuel gas code.
Section 5-611 Amendments to the fuel gas code.

CHAPTER 7

MOBILE HOME REGULATIONS

Section 5-701 Mobile home regulations adopted.
Section 5-702 Mobile home regulations, permits, anchoring.
Section 5-703 Use of travel trailers as temporary housing following a disaster.
Section 5-704 Penalty.

CHAPTER 8

POWER GENERATION TOWERS AND WIND GENERATORS

Section 5-801 Purpose & Intent
Section 5-802 Definitions
Section 5-803 Wind Energy Conversion Systems Not Requiring a Zoning Permit
Section 5-804 General Requirements for all Wind Energy Conversion Systems
Section 5-805 Required Permit
Section 5-806 Pre-Application Meeting
Section 5-807 Application Requirements
Section 5-808 Location of Systems
Section 5-809 Structure Design and Construction
Section 5-810 Height and Clearances of Systems
Section 5-811 Appearance and Visibility of all Wind Energy Conversion Systems
Section 5-812 Security of Wind Energy Conversion Systems
Section 5-813 Signage
Section 5-814 Lot Size and Setbacks
Section 5-815 Maintenance & Inspections
Section 5-816 Liability Insurance
Section 5-817 Removal of Wind Energy Conversion Systems
Section 5-818 Variances
Section 5-819 Penalty

(This page intentionally left blank)

CHAPTER 1

LICENSES AND FEES; PERMITS, BOND AND INSURANCE

ARTICLE A

LICENSE FEES

Section 5-101	License required for contractors and journeymen.
Section 5-102	Fees specified.
Section 5-103	Term of initial license.
Section 5-104	Licensee prohibited from engaging in activities beyond scope of license and restrictions.

ARTICLE B

PERMITS AND INSPECTIONS

Section 5-121	Building permits
Section 5-122	Expiration of permits.
Section 5-123	Plumbing, electrical, mechanical and other permits.
Section 5-124	Schedule of permit and inspection fees.
Section 5-125	Display of permits.
Section 5-126	Revocation.
Section 5-127	Building permits, fees, insurance, and exemptions.
Section 5-128	Permit fees assessed in addition to existing inspection fees.

ARTICLE C

OTHER REGULATIONS

Section 1-141	Right to enforce and stop construction.
Section 1-142	Cases of urgency.
Section 1-143	Power to make rulings.
Section 1-144	Power to call upon police or fire department.
Section 1-145	Power to enter.
Section 5-146	Penalty.
Section 5-147	Relief in the courts.
Section 5-148	Effect of violation by corporate officers and agents.
Section 5-149	Conviction to be deemed cause for revocation of licenses, certificates.

ARTICLE A
LICENSES AND FEES, PERMITS, BOND AND INSURANCE

SECTION 5-101 LICENSE REQUIRED FOR CONTRACTORS AND JOURNEYMEN.

All contractors, journeymen and apprentices whose activities are regulated by any of the City's building, electrical, plumbing, and mechanical codes in this Part 5 are hereby required to obtain a license or registration certificate from the City before engaging in regulated activities.

Cross Reference: See also Section 5-301, 5-401, and 5-501 respectively for the City's plumbing, electrical and mechanical codes; see Section 5-202 on building contractors. See also Appendix 1 on Fees and Section 8-301 on Dilapidated Buildings, Section 14-201 Street Cuts.

SECTION 5-102 FEES SPECIFIED.

The fees for the registration certificates required shall be as set forth in the fee schedule and may be amended from time to tie by motion or resolution of the Council.

Cross Reference: See Appendix 1 of this Code for Fee Schedule.

SECTION 5-103 TERM OF INITIAL LICENSE.

The initial license or registration issued as provided for herein shall be for a term of one year.

SECTION 5-104 LICENSEE PROHIBITED FROM ENGAGING IN ACTIVITIES BEYOND SCOPE OF LICENSE AND RESTRICTIONS.

No licensee shall engage in regulated activities beyond the scope of the license or registration together with any restrictions placed thereon issued to the licensee.

ARTICLE B
PERMITS AND INSPECTION

SECTION 5-121 BUILDING PERMITS.

Whenever any building, structure, facility, or other appurtenance is to be erected, constructed, altered, improved, moved, or removed as provided in the City's building code, a building permit shall be obtained from the City. (Prior Code, Sec. 4-5).

Cross Reference: Also Sec. 12-201 on a building and occupancy permits; 8-301 dilapidated buildings.

SECTION 5-122 EXPIRATION OF PERMITS.

A. If the work described in any permit has not commenced to the foundation or other structural inspection within one hundred eighty (180) days from the date of issuance

thereof, the permit shall be cancelled by the building official; and written notice thereof shall be given to the persons affected. A new permit must be applied for.

B. If the work described in any permit has not been substantially completed within one (1) year of the date of issuance thereof, the permit shall expire and be cancelled by the building official; and written notice thereof shall be given to the persons affected, together with notice that further work as described in the cancelled permit shall not proceed unless and until a new building permit has been obtained. Completion is determined by issuance of an occupancy permit by the City.

C. For swimming pools the time period for substantial completion shall be ninety (90) days from date of issuance.

D. Extensions of time may be applied for to the City Manager for reason of hardship or
other cause of delay. Such extensions shall not exceed three (3) months. If the City Manager denies an extension, then an appeal may be made to the City Council by filing a written notice of such appeal with the City Manager within ten (10) days of the date of denial of the extension.

SECTION 5-123 PLUMBING, ELECTRICAL, MECHANICAL AND OTHER PERMITS.

Permits for plumbing, electrical, or mechanical work, or other permits as required and as defined by this Code, shall be obtained in accordance with the terms of the respective City plumbing, electrical, and mechanical codes. (Prior Code, Sec. 4-8, in part)

SECTION 5-124 SCHEDULE OF PERMIT AND INSPECTION FEES.

Before any permit shall be issued or any inspection shall be made, as required by the City building or technical codes, the recipient of the permit shall pay fee in accordance with the schedules adopted by the City Council by motion or resolution. A copy of the schedules shall be on file in the office of the City Clerk. All references to inspection fees in the technical codes adopted by the City are deleted when replaced by a fee in the fee schedule. (Prior Code, Sec. 4-5, in part.)

Cross Reference: See Appendix 1 of this Code, fee schedule.

SECTION 5-125 DISPLAY OF PERMITS.

A. Where a permit is issued under Part 5, an informational sign shall be displayed at the site of the structure to be constructed, enlarged, repaired, remodeled, or demolished. The display shall be on a weatherproof sign face displayed on street frontage of the property (front yard), or displayed on the structure itself. The lettering shall be of sufficient size and color to be legible from the abutting street and shall include the following information: (a) address of property; (b) name and telephone number of emergency contact person; (c) building permit number. The

sign shall be installed before construction starts, and shall be maintained until construction is complete.

B. The building official is hereby authorized to direct the cessation of all work on property upon which the sign described in Section A is not posted. Failure to cease work in compliance with the direction of the building official is an offense.

SECTION 5-126 REVOCATION.

If the work in or about any building or structure shall be conducted in violation of the provisions of this Code or the official building code, the permit issued shall be revoked. It is unlawful to continue to work until such violations shall have been corrected to the satisfaction of the City. (Prior Code, Sec. 43-7)

SECTION 5-127 BUILDING PERMITS, FEES, INSURANCE, EXEMPTIONS.

1. Before the issuance of any residential building permit, the contractor shall furnish a certificate from an Oklahoma licensed insurance company that the contractor has general liability insurance in the amount required for contractors licensed by the Construction Industries Board of the State of Oklahoma (currently $50,000 combined single limits) and that the applicant has worker's compensation insurance or a worker's compensation exemption verification document.

2. For purposes of this section a residential building permit is defined as any building permit for a single family or two-family residential structure and shall include construction of a new structure, remodel of an existing structure, and the addition to an existing structure, and including roof covering replacement and any other building improvement required a permit under the International Codes as adopted by the City. Not included under the definition of residential building permit are a single-family or two-family carport, patio cover, storage building, accessory building, pool, or fence.

3. This section shall not apply to a person or persons performing the construction or remodeling to his, her, or their own existing single family or two-family on their own property, unless the modifications are being performed by and/or the permit acquired by a general contractor or subcontractor, in which case the general contractor or subcontractor shall meet the requirements of this section.

4. The City Council shall establish by resolution a fee for administration of the provisions of this ordinance which fee shall be added to, assessed, and paid as part of the building permit fee.

5. It shall be unlawful and an offense to perform any of the work described in this section without first obtaining a permit and providing insurance as required in this section. A violation of this section shall be punishable by a fine of not to exceed Five Hundred Dollars ($500.00) plus court costs.

SECTION 5-128 PERMIT FEES ASSESSED IN ADDITION TO EXISTING INSPECTION FEES.

1. The City shall charge a state mandated fee for building permits and renewal of such permits which authorized work governed by codes within the purview of the Oklahoma Uniform Building Code Commission (Commission) as follows:

For issuance of permit $5.00 (or such amount as may be authorized by Commission).

For renewal of permit $5.00 (or such amount as may be authorized by Commission).

2. Such fees shall be deposited in an account created by the City's Finance director for that purpose.

3. The City shall remit the monies in the account on a monthly basis directly to the State Treasury for deposit in the Oklahoma Uniform Building Code Commission Revolving Fund. Along with the deposits required by this paragraph, the City shall also submit a report stating the total amount of funds collected and the total number of fees imposed during the preceding month. The report shall be made on computerized or manual disposition report as provided by rule of the Commission.

4. Deposits to the Oklahoma Uniform Building Code Commission Revolving Fund shall be due on the twentieth day of each month for the fees collected during the preceding calendar month.

5. The City shall further levy and collect a fee of fifty cents ($.50) for every construction permit or renewal permit issued. These monies shall be deposited into an account for the sole use of the City. The City shall state the total amount of funds collected and the total number of fees imposed to the State Treasury in the report required by paragraph 3 of this section.

6. The fees levied under this section shall be in addition to all current fees levied by the City for construction permits since all existing fees are inspection and compliance fees to defray the costs of inspections and plan reviews. All existing construction/building permit fees described elsewhere in this Code are hereby declared to be inspection and compliance fees regardless of whether they may be called permit fees or inspection fees.

SECTION 5-129 BUILDING PERMITS FOR ACCESSORY BUILDINGS.

A. A building permit for an accessory building may only be issued after a certificate of occupancy has been issued for the main building on the applicable property.

B. Where an unforeseen hazard involving a vehicular accident, fire, or natural disaster has destroyed both a main building and an accessory building, the person owning the affected property at the time of the unforeseen hazard may, within six (6) months from the date of the unforeseen hazard, obtain a building permit for construction of a new accessory building prior to issuance of a building permit or certificate of occupancy for a new main building, provided (1) the prior accessory building was constructed pursuant to a valid building permit issued by the City, and (2) the owner submits a statement affirming the owner's intention to rebuild the main building on the affected property.

ARTICLE C

OTHER REGULATIONS

SECTON 5-141 RIGHT TO ENFORCE AND STOP CONSTRUCTION.

The building official shall have the right to stop the construction of any building or structure, or the alteration, repair, or wrecking of the same, if same is being done in a careless or reckless manner, or in violation of the provisions of this part.

SECTION 5-142 CASES OF URGENCY.

Decisions of the building official in cases where failure to carry out his orders would endanger life and property shall be absolute and Final to the extent allowed by law.

SECTION 5-143 POWER TO MAKE RULINGS.

The building official shall have power to make filings and pass upon questions relating to the use of materials and methods of construction to make the same protective of life and property and in conformance with the intent and purpose of this part.

SECTION 5-144 POWER TO CALL UPON POLICE OR FIRE DEPARTMENT.

The building official shall have authority to call upon the police or fire department in enforcing this part. It shall be mandatory upon any member thereof to act in compliance with and perform such duties as the building official may require.

SECTION 5-145 POWER TO ENTER.

The building official may enter any building or structure whether completed or in the course of construction for the purpose of making inspections.

SECTION 5-146 PENALTY.

Any person who shall engage in any business, trade, or vocation for which a license, permit, certificate, or registration is required by this part, without having a valid license, permit, certificate, or certificate of registration as required, or who shall fail to do anything required by this part or by any code adopted by this part, or who shall otherwise violate any provision of this part or of any code adopted by this part, or who shall violate any lawful regulation or order made by any of the officers provided for in this part, shall be guilty of an offense, and upon conviction thereof, shall be subject to punishment as provided in Section 1-108 of this Code. (Prior Code, Sec. 4-50)

SECTION 5-147 RELIEF IN THE COURTS.

No penalty imposed by and pursuant to this part shall interfere with the right of the City also to apply to the proper courts of the State for a mandamus, an injunction, or other appropriate action against the person violating this part. (Prior Code, Sec. 4-52)

SECTION 5-148 EFFECT OF VIOLATION BY CORPORATE OFFICERS AND AGENTS.

Violation of any of the terms or provisions of this part by any corporation or association shall subject the officers and agents in charge of the business of such corporation or association to the penalty provided in this part. (Prior Code, Sec. 4-52)

SECTION 5-149 CONVICTION TO BE DEEMED CAUSE FOR REVOCATION OF LICENSES, CERTIFICATES.

Conviction under the provisions of this part shall be deemed just cause for the revocation of any certificate or license which a person may have or hold under the provisions of this part. Examination for reissue of such certificate or license shall be at the discretion of the City Council, but in no event shall be delayed longer than a period of one year.

(This page intentionally left blank)

CHAPTER 2

BUILDING CODE AND REGULATIONS

ARTICLE A

BUILDING CODE

Section 5-201	Adoption of building code.
Section 2-202	Amendment to building code.
Section 2-203	Provisions declared to be minimum requirements.
Section 5-204	Adoption of existing building code.
Section 5-205	Enforcement.
Section 5-206	Swimming pool permits.
Section 5-207	Adoption of residential code.
Section 5-208	Amendments to residential code.

ARTICLE B

MOVING BUILDINGS

Section 5-221	Relocation of buildings.
Section 5-222	Permit required to move building.
Section 5-223	Application for permits.
Section 5-224	Permit fees.
Section 5-225	Bond required.
Section 5-226	Procedures for permits, approval, disapproval.
Section 5-227	Interference with trees and fixtures.
Section 5-228	Interference with poles and wires.
Section 5-229	Safety precautions and protection of property.
Section 5-230	Time limit.
Section 5-231	Moving buildings through city.
Section 5-232	New infrastructure use fee.

ARTICLE A

BUILDING CODE

SECTION 5-201 ADOPTION OF BUILDING CODE.

1. That a certain document, copies of which are on file in the office of the City Clerk of the City of Piedmont, Oklahoma, being marked and designated as the *International Building Code, 2009,* as published by the International Code Council, as amended, revised and modified by the Uniform Building Code Commission of the State of Oklahoma be and is hereby adopted by the City of Piedmont, Oklahoma, for regulating and governing the minimum standards for

residential building construction for one and two family dwellings and townhouses within the City providing for the issuance of permits and collection of fees therefore; and each and all of the regulations, provisions, penalties, conditions, and terms of said *International Building Code, 2009* on file in the office of the City Clerk are hereby referred to, adopted, and made a part hereof, as if fully set out in this ordinance, with the additions, insertions, deletions, and changes, if any, prescribed in Section 2 of this ordinance.

2. The following specific appendices of the *International Building Code, 2009* are adopted for use as a reference and clarification of the Code.

Appendix A

Appendix B

Appendix C

Appendix E

Appendix G

Appendix H

Appendix I

Appendix J

Appendix M

Appendix N

Appendix Q

State Law Reference: Power of City of adopt building code, 11 O.S. §14-107; 74 O.S. §324.8.

SECTION 5-202 AMENDMENTS TO BUILDING CODE.

The following additions, amendments or deletions are made to the building code adopted herein.

Section 101.1 Insert: City of Piedmont, Oklahoma.
Section 1612.3 Insert: City of Piedmont, Oklahoma
Section 1612.3 Insert: Most current version.
Section 3410.2 Insert: January 1, 1960

Cross Reference: See Fee Schedule in Appendix 1 of this Code.

SECTION 5-203 PROVISIONS DECLARED TO BE MINIMUM REQUIREMENTS.

The provisions of the Building Code in their interpretation and application shall be held to be minimum requirements adopted for the promotion of public health, safety, and general

welfare. Wherever any of the provisions or requirements of the Code are inconsistent with the provisions of the City Code or State Statutes presently existing or enacted in the future, the provisions or requirements containing the most restrictive regulations shall apply and govern.

SECTION 5-204 ADOPTION OF EXISTING BUILDING CODE.

Repealed by Ordinance No. 573

SECTION 5-205 ENFORCEMENT.

The official designated as being responsible for the enforcement of the City's building codes shall be the Building Official. Those things specified in the code shall be performed by the Building Official. (Prior Code, §4-4)

SECTION 5-206 SWIMMING POOL PERMITS.

A. The provisions of this section are applicable to the construction of public or private swimming pools.

B. Any person who shall build any permanent public or private swimming pool with a water depth in excess of eighteen (18) inches shall make application to the City for a permit therefor. The application shall state the name of the owner of the land and legal description of the land upon which the pool is to be located; shall describe the location of the pool on the land; shall describe the length, width, and maximum depth of the pool; and shall state whether the pool is public or private or both. All such applications shall be submitted to the Building Official who shall inspect the construction if such building permit be issued. The Building Official shall have the same authority as in the construction of structures and as otherwise provided by the ordinances of the City.

C. The fee for the swimming pool permit shall accompany the application. The fee shall be refundable if the application is denied. The applicant for permit shall also pay an inspection fee for each inspection made by the City, including but not limited to plumbing and electrical inspection.

D. Every person or party constructing a swimming pool, public, private, or both, shall at the same time construct a fence no less than four (4) feet in height. Such fence shall be constructed in a manner that the swimming pool is completely surrounded by fence, or building structure, whereby such swimming pool is accessible only through the structure or gate. Such fence shall be of such construction that access to pool areas shall be through gates or building structures.

E. Every person or party maintaining a swimming pool for public use shall make the application herein described. The Building Official shall refer the application to the Planning Commission for report and recommendations to the City Council. The Council shall make

such requirements as it deems necessary and in the best interest of the public health, safety, and welfare.

F. All public swimming pools shall be inspected by the Building Official when the pool is open to the public. All such public pools shall be maintained in accordance with State laws and ordinances of the City.

SECTION 5-207 ADOPTION OF RESIDENTIAL CODE

That a certain document, one copy of which is on file in the office of the City Clerk of the City of Piedmont, being marked and designated as the *International Residential Code, 2003 edition,* including Appendix Chapters A - L, as published by the International Code Council, be and is hereby adopted as the Residential Code of the City of Piedmont, Oklahoma, for regulating and governing the construction, alteration, movement, enlargement, replacement, repair, equipment, location, removal and demolition of detached one and two family dwellings and multiple single family dwellings (townhouses) not more than three stories in height with separate means of egress as herein provided; providing for the issuance of permits and collection of fees therefor; and each and all of the regulations, provisions, penalties, conditions, and terms of said Residential Code on file in the office of the City Clerk of the City of Piedmont, are hereby referred to, adopted, and made a part hereof, as if fully set out in this ordinance, with the additions, insertions, deletions, and changes, if any, prescribed in Section 5-208 of this ordinance.

SECTION 5-208 AMENDMENTS TO THE RESIDENTIAL CODE

The following additions, insertions, and changes are adopted to the residential code:

Section R01.1 Insert: City of Piedmont, Oklahoma.
Section R301.2(1) Insert: As shown in accompanying tables
Section P2603.6.1 Insert: Twenty-four (24) inches
Section P3103.1 Insert: Twenty-four (24) inches

SECTION 5-209 ADOPTION OF PROPERTY MAINTENANCE CODE

1. That a certain document, copies of which are on file in the office of the City Clerk of the City of Piedmont, being marked and designated as the *International Property Maintenance Code, 2006 Edition,* as published by the International Code Council, be and is hereby adopted as the Property Maintenance Code of the City of Piedmont, Oklahoma, for regulating and governing the conditions and maintenance of all property, buildings, and structure; by providing the standards for supplied utilities and facilities and other physical things and conditions essential to ensure that structures are safe, sanitary, and fit for occupation and use; and the condemnation of buildings and structures unfit for human occupancy and use, and the demolition of such existing structures as herein provided,

providing for the issuance of permits and collection of fees therefore; and each and all of the regulations, provisions, penalties, conditions, and terms of said Property Maintenance Code on file in the office of the City Clerk are hereby referred to, adopted, and made a part hereof, as if fully set out in this ordinance, with the additions, insertions, deletions, and changes, if any, prescribed in Section 2 of this ordinance.

2. The following sections are hereby revised:

Section 101.1. Insert:	City of Piedmont, Oklahoma
Section 103.5. Insert:	as adopted by Resolution of the City Council
Section 302.4 Insert:	12 inches
Section 304.14 Insert:	April 1 to October 1
Section 602.3 Insert:	October 1 to April 1
Section 602.4 Insert:	October 1 to April 1

SECTION 5-210 ADOPTION OF ACCESSIBLE AND USEABLE BUILDINGS AND FACILITIES CODE

The *American National Standards Accessible and Usable Buildings Facilities Code (ICC/ANSI A117.1-2003) 2003 Edition* is hereby adopted by reference and shall apply to all buildings in the City of Piedmont, Oklahoma, within the scope of this Code. Copies are on file in the Offices of the City Clerk of the City of Piedmont, Oklahoma. Any work performed shall comply with the provisions thereof.

ARTICLE B

MOVING BUILDINGS

SECTION 5-221 RELOCATION OF BUILDINGS

No building or structure shall be removed or relocated unless such building can be and is made to comply with the requirements of codes and regulations governing the erection of new buildings or structures upon the proposed new location. (Prior Code, Sec. 4-12, in part).

SECTION 5-222 PERMIT REQUIRED TO MOVE BUILDINGS; PROCEDURES

Application for the permit shall contain the following:

A. Except as hereinafter provided, no person shall move any buildings or structures along or across any street, alley, or roadway within the City without a permit therefor from the building official issued in accordance with the provisions of the applicable building codes and this chapter. Except as provided in subsections B and C of this section, no such permit shall be granted to any person except a bonded house mover. Proof of possession of a valid and current state license and the number assigned by the

Oklahoma Corporation Commission shall be provided to the building official prior to issuance of a permit.

B. For buildings not greater than 200 square feet in size and not more than 14 feet tall which are used for non-residential and non-agricultural purposes the provisions of Section 5-226 which requires the mailing of notice to surrounding property owners shall not apply, and the completed application as required by Section 5-223 shall be forwarded to the Planning Commission for review and report, and then to the City Council for approval or denial.

C. For portable buildings for residential uses not greater than 200 square feet in size, no moving permit shall be required.

D. All other buildings being moved into the City of Piedmont shall obtain a moving permit under all the procedures set forth in Section 5-226.

E. Nothing herein shall be construed to authorize the location or use of any building in violation of the zoning ordinances of the City of Piedmont, nor shall this section be construed as an exemption from any of the building, electrical, or plumbing code of the City of Piedmont.

SECTION 5-223 APPLICATION FOR PERMITS

A. The location of the building or structure proposed to be moved, its length, width, and height, and the principal material of its walls and roof, and shall state definitely the route over which it is to be moved, the length of the time required for the removal, and the proposed new location thereof. The building official shall have authority to require any change in such route which he shall deem proper under the circumstances.

B. The applicant must, simultaneously with the filing of the application, file a set of plans and specifications indicating in detail sufficient to enable the building official to determine compliance, all phases of construction, writing, plumbing, etc. concerning the building sought to be moved in and to which the building code, plumbing code, gas code, and electrical code adopted by the City pertains.

C. The building official shall examine the plans and specifications left with the City Clerk and shall, if such plans and specifications comply with such building code and this chapter, endorse his approval thereon as being in full compliance therewith; otherwise, such inspector shall endorse his disapproval thereof and specify in a separate letter to be attached to such plans, the particulars in which such plans and specifications failed to comply with the minimum standards embodied in such building code hereinabove referred to. In the latter event, no permit shall be issued until amended plans and specifications are filed moving the objectionable features so noted. (Prior Code, Sec. 4-13, as amended)

SECTION 5-224 PERMIT FEES

Before any permit to remove a building or structure is granted under the provisions of this section, the applicant for such permit shall pay a fee as provided in the fee schedule. Permit fees are not returned upon disapproval of a permit. (Prior Code, Sec. 4-13)

SECTION 5-225 BOND REQUIRED

Before any person shall be granted a permit for the moving of any building or structure as provided in this chapter, he shall file with the City a bond in the sum as set in the City's bond schedule which shall run in favor of the City, and any private person sustaining damages under the conditions thereof shall be entitled to sue thereon in his own name. The bond shall be conditioned, among other things, that if such permittee is granted the permit, he shall promptly pay all damages and for all injuries that may accrue to any person or property, either public or private, within the City when such injury or damages are inflicted by the permittee, or his agents, servants, employees, workers, contractors, or subcontractors, and such bond shall be conditioned also that the permittee will save, indemnify, and protect the City from all liability which may arise, either directly or indirectly from the moving of any building or structure by the permittee, his agents, servants, employees, workers, contractors, or subcontractors, and that the permittee will in all respects comply with the ordinances of the City in regard to the moving of buildings or structures, and to the use or obstruction of the streets and other public places of the City.

SECTION 5-226 PROCEDURES FOR PERMITS, APPROVAL, DISAPPROVAL

A. The Clerk shall forward the application and all accompanying data to the Planning Commission after it has been determined that the application is complete. The Planning Commission shall, with the assistance of the Clerk, send written notice to all property owners within a three hundred (300) foot radius of the property to which the building or structure is to be moved at least ten (10) days prior to the meeting at which the application is to be considered unless all property owners file a written consent and waiver of this requirement with the application. The members of the Planning Commission may personally view the building or structure, and may seek the assistance of the building official to this end. The Planning Commission shall recommend approval or disapproval of the permit and forward its recommendation to the City Council along with the application and all data reviewed.

B. At least ten (10) days prior to the meeting at which the application is to be considered by the City Council, the Clerk shall send written notice to all property owners within a radius of three hundred (300) feet of the property to which the building or structure is to be moved. The notice shall contain the legal description of the property involved, the name of the applicant, the date, time, and place of the meeting, and the subject matter of the application. This subsection shall not apply if all property owners have previously filed a written consent and waiver of this requirement with the application as provided for in this article.

C. The Council may approve or reject such permit and in that determination shall consider the Planning Commission recommendations. The City Council shall refuse to issue a permit if:

(1) Any application requirement has not been complied with.

(2) The building is too large to move without endangering persons or property in the City.

(3) The building is in such a state of deterioration or disrepair, or is otherwise to structurally unsafe that it could not be moved without endangering persons and property in the City.

(4) The building is structurally unsafe or unfit for the purpose for which moved, if the removal location is in the City.

(5) Zoning or other ordinances would be violated by the building in its new location.

(6) The building is not of a similar structure as houses in the immediate area.

D. If any mover, his agents or employees, shall, while acting within the scope of this chapter, damage or destroy any public or private property and fail or refuse to repair, renew, or pay for the same, or shall fail or refuse to pay for the expense of the raising, cutting, or repair of any electric wire or cable, or the removal and replacement of any pole bearing the same as required by the terms of this chapter, a written claim containing a statement of such damages or expense may be filed with the building official who shall investigate the same. If the building official finds the same to be just and reasonable, no further permits within the scope of this chapter shall be issued to such mover until the claim is satisfied. Denial of such permit may be appealed to the City Council by filing a notice of appeal with the building official and City Clerk within ten (10) days of the date of denial. (Prior Code, Secs. 4-13 to 4-15, in part)

SECTION 5-227 INTERFERENCE WITH TREES AND FIXTURES

No tree on any street shall be removed or the branches of any tree be cut or trimmed in order to facilitate the moving of any building, except with the consent and under the supervision of the City. No fixture on any street or alley shall be moved, displaced, or otherwise interfered with to facilitate the moving of any building except with the consent and under the supervision of the building official.

SECTION 5-228 INTERFERENCE WITH POLES AND WIRES.

Whenever for the purpose of facilitating the moving of any building or structure it is necessary to raise or cut any telephone or telegraph wire or cable or any electric wire, or move

any pole bearing any such wire or cable, it is the duty of the moving having charge of the moving of such building or structure to give the person owning or operating the poles, wires, or cables at least twenty-four (24) hours notice of the time, place, when, and where the removal or such poles or the raising or cutting of such wires or cables will be necessary. After the service of the twenty-four (24) hour notice it is the duty of the person owning or operating the poles, wires, or cables to furnish competent workers or linemen to remove such poles or raise or cut such wires or cables. The regular wages of the workers or linemen while engaged at such work shall be paid by such movers. No mover shall raise, cut, or move any such pole, wire, or cable unless the persons or authorities owning or having control of the same fail or refuse to do so after such notice. Only competent workers or linemen shall be employed in such work, and the same shall be done in a careful and workmanlike manner, and the poles, wires, or cables promptly replaced and damages thereto promptly repaired at the expense of such mover.

SECTION 5-229 SAFETY PRECAUTIONS AND PROTECTION OF PROPERTY

No building or structure shall be allowed to remain at a standstill in any public street or other public place for a longer period than twenty-four (24) hours without the consent in writing of the building official. When any building or structure is left in any street at night, two (2) or more approved warning lights or signals shall be conspicuously posted at each end of such building or structure so as to give warning in both directions of the street. All other obstructions left in the street shall be safeguarded by similar lights or signals. All such lights and signals shall be in good working order when posted, and shall be securely placed in position. No such building, structure, or other obstruction shall be left standing at night in any street intersection. The Chief of the Fire Department and the Chief of Police shall be notified of the location of any such building or structure left standing in the street at night. When necessary to protect pavement or sidewalk, planks of sufficient size and thickness to prevent injury to such pavement or sidewalk shall be laid for the wheels of the moving trucks to travel on. The Building Official shall have the power to require the use of any precautionary measures than those specifically mentioned in this Chapter when necessary or proper to protect life, limb, or property.

SECTION 5-230 TIME LIMIT

At the time of application for a moving permit, it is the duty of the mover of the building or structure to estimate the reasonable time required for the moving of the building from its present location to its proposed location. He shall state in his application for permit what the applicant deems to be such reasonable time. The route and time allowed for the moving of the building shall be determined and fixed by the City Manager. The permit shall especially provide that the building shall be, from the time any part of the street is used for the moving of same, cleared from any and all of the streets of the City within a specified number of days specified therein, Sundays and holidays excepted. The mover shall bind himself to pay the sum as set by the City per day for each and every day all or part of the building or structure remains on the street in excess of the number of days allowed in the permit, and his cash deposit shall, in addition to his bond, be secondarily liable for the payment of the amount. Nothing but an act of God shall be a defense against the payment of these sums.

SECTION 5-231 MOVING BUILDINGS THROUGH CITY

It is unlawful for any person to move, transfer, or place any building, structure, or mobile home through the corporate limits of the City without first obtaining a permit from the City Manager.

SECTION 5-232 NEW INFRASTRUCTURE USE FEE

A. The City Council of the City of Piedmont, Oklahoma, and the Piedmont Municipal Authority find and recommend that the costs of future improvements and expansion to the City should be borne by the users whose demand has created the need for future expansion and improvements. The City Council desires to establish a mechanism through which to finance the future growth and expansion of the City's water system, wastewater system, and roadways to continue providing quality infrastructure for its citizens. Upon recommendation of its professional staff and consultants, based further on recommendation of the City's Planning Commission and Piedmont Municipal Authority, the City Council has and does hereby determine that such costs should be, in the future, imposed upon the development of land with the collection of an infrastructure use fee herein to be collected at the date of issuance of the building permit on each residential lot. The City Council finds that there are a number of vacant lots in approved subdivisions and future subdivisions, either platted or soon to be platted, the development of which will impose an increased demand on the City's water, wastewater, and roadway systems, and the City Council therefore finds that it is necessary to adopt the provisions of this infrastructure use f for the imposition of appropriate costs on such lots and future developments.

B. There is hereby established and imposed a New Infrastructure Use Fee to be levied and collected on new residential construction as set forth herein:

1. For new residential construction the sum of Seven Hundred Fifty Dollars ($750.00). The amount of such fee shall be reviewed by the City Council of the City of Piedmont at least once annually after July 1, 2007, to determine the need for any adjustments to the fee.

2. The fee imposed herein shall be collected at the time a building permit is issued for construction.

3. The funds collected from the imposition of this infrastructure use fee shall be used for the future expansion and improvements of the City's water, wastewater, and roadway systems. Funds collected shall be paid into the water, wastewater, and roads capital improvement account and accounted separately therein. Such funds and the interest accruing thereon shall be used exclusively for expansion, improvements, and to pay debt service obligations issued to finance said future improvement and expansion of said water, wastewater, and roadway systems.

C. The new Infrastructure Use Fee established by subsection A, above, shall be waived for owners of property as of May 24, 2011 whose residential structure was damaged or destroyed by the May 24, 2011 tornado and who apply for a building permit within six (6) months after May 24, 2011 to construct a new residential structure on the same property as their damaged or destroyed residence.

CHAPTER 3

PLUMBING CODE AND REGULATIONS

ARTICLE A

GENERAL PROVISIONS

Section 5-301	Plumbing code adopted.
Section 5-302	Amendments to the plumbing code.
Section 5-303	Administration.
Section 3-304	Dangerous and unsanitary construction.
Section 5-305	Violations and penalties.
Section 5-306	Adoption of private sewer disposal code.
Section 5-307	Amendments to private sewage disposal code.

ARTICLE B

PLUMBERS' REGISTRATION

Section 5-311	Definitions.
Section 5-312	License and registration required; regulations.
Section 5-313	Registration fee, surety bond.
Section 5-314	Issuance of plumbers' registration certificates.

State Law Reference: Plumbers and plumbing generally, 59 O.S.§ 1991, et seq.

SECTION 5-301 PLUMBING CODE ADOPTED

That a certain document, copies of which are on file in the office of the City Clerk of the City of Piedmont, being marked and designated as the *International Plumbing Code, 2006 Edition,* including Appendix Chapters B through F, as published by the International Code Council, be and is hereby adopted as the Plumbing Code of the City of Piedmont, Oklahoma, for regulating and governing the design, construction, quality of materials, erection, installation, alteration, repair, location, relocation, replacement, addition to, use or maintenance of plumbing systems as herein provided; providing for the issuance of permits and collection of fees therefore; and each and all of the regulations, provisions, penalties, conditions, and terms of said Plumbing Code on file in the office of the City Clerk are hereby referred to, adopted, and made a part hereof, as if fully set out in this ordinance, with the additions, insertions, deletions, and changes, if any, prescribed in Section 5-302 of this ordinance.

SECTION 5-302 AMENDMENTS TO THE PLUMBING CODE

The following sections are hereby revised:

Section 101.1 Insert: City of Piedmont, Oklahoma.
Section 106.6.2 Insert: as adopted by Resolution of the City Council.
Section 106.6.3 Insert: 50% and 50%
Section 108.4 Insert: $500.00, 0 days
Section 108.5 Insert: $500.00 - $500.00
Section 305.6.1 Insert: 24 inches
Section 904.1 Insert: 24 inches

Cross Reference: See Fee Schedule, Appendix 1 of this Code.

SECTION 5-303 ADMINISTRATION

The administration and enforcement of this Chapter shall be the responsibility of the plumbing official who shall be the Building Official, or his designee, unless another official is appointed.

SECTION 5-304 DANGEROUS AND UNSANITARY CONSTRUCTION

A. Any portion of a plumbing system found by the plumbing official to be unsanitary as defined herein is hereby declared to be a nuisance.

B. Whenever brought to the attention of the City that any unsanitary conditions exist or that any construction or work regulated by this code is dangerous, unsafe, unsanitary, a nuisance or a menace to life, health, property, or otherwise in violation of this code, City personnel may request an investigation by the plumbing official who, upon determining such information to be fact, shall order any person using or maintaining any such condition or responsible for the use or maintenance thereof to discontinue the use or maintenance thereof or to repair, alter, remove, or demolish same as the plumbing official may consider necessary for the proper protection of life, health, or property, and in the case of any gas piping or gas appliance may order any person applying gas to such piping or appliance to discontinue supplying gas thereto until such piping or appliance is made safe to life, health, or property. Every such order shall be in writing, addressed to the owner, agent, or person responsible for the premises in which such condition exists and shall specify the date or time for compliance with such order.

C. Refusal, failure, or neglect to comply with any such notice or order shall be considered a violation of this code.

D. When any plumbing system is maintained in violation of this code and in violation

any notice issued pursuant to the provisions of this section, or where a nuisance exists in any building or on a lot on which a building is situated, the plumbing official shall institute any appropriate action or proceeding in any court of competent jurisdiction to prevent, restrain, correct, or agate the violation or nuisance.

SECTION 5-305 VIOLATIONS AND PENALTIES.

A. Any person violating any provisions of this code shall be deemed guilty of an offense, and upon conviction thereof shall be punishable as provided in Section 1-108 of this code, or by revocation of the plumber's license, or by both fine and revocation of he plumber's license. Each separate day or any portion thereof during which any violation of this code occurs or continues shall be deemed to constitute a separate offense, and upon conviction thereof shall be punished as herein provided.

B. The issuance or granting of a permit or approval of plans and specifications shall not be deemed or construed to be a permit for or on approval of any violation of any of the provisions of this code. No permit presuming to give authority to violate or cancel the provisions of this code shall be valid, except insofar as the work or use which it authorized is lawful.

SECTION 5-306 ADOPTION OF PRIVATE SEWER DISPOSAL CODE.

That a certain document, one copy of which is on file in the office of the City Clerk of the City of Piedmont, being marked and designated as the *International Private Sewage Disposal Code, 2003 edition,* including Appendix Chapters A and B, as published by the International Code Council, be and is hereby adopted as the Private Sewage Disposal Code of the City of Piedmont, Oklahoma, for regulating and governing the design, construction, quality of materials, erection, installation, alteration, repair, location, relocation, replacement, addition to, use or maintenance of individual sewage disposal systems as herein provided; providing for the issuance of permits and collection of fees therefor; and each and all of the regulations, provisions, penalties, conditions, and terms of said Private Sewage Disposal Code on file in the office of the City Clerk of the City of Piedmont, are hereby referred to, adopted, and made a part hereof, as if fully set out in this ordinance, with the additions, insertions, deletions, and changes, if any, prescribed in Section 5-307 of this ordinance.

SECTION 5-307 AMENDMENTS TO PRIVATE SEWAGE DISPOSAL CODE.

The following sections are hereby revised to read as follows:

Section 101.1 Insert: City of Piedmont, Oklahoma.
Section 106.4.2 Insert: As adopted by Resolution of the City Council.
Section 106.4.3 Insert: 50%, 50%
Section 108.4 Insert: $500.00 - 0 days
Section 108.5 Insert: 500.00 - $500.00
Section 405.2.5 Insert: 7 days after observation begins
Section 405.2.6 Insert: 7 days after observation begins

ARTICLE B

PLUMBERS' REGISTRATION

SECTION 5-311 DEFINITIONS.

As used herein:

1. "Apprentice or plumber's apprentice" means any person sixteen (16) years of age or over who is engaged in learning and assisting in the installation of plumbing under the direct supervision of a licensed journeyman plumber or plumbing contractor.

2. "Journeyman plumber" means any person who performs the manual work of installing plumbing under the direction of a master plumber or plumbing contractor. This definition may be construed to mean any person who has qualified and is licensed under the Oklahoma State Plumbing Licensing Law to act as a journeyman plumber according to the requirements of the Oklahoma State Plumbing Licensing Law.

3. "Plumbing contractor" means any person skilled in the planning, superintending, and practical installation of plumbing and is familiar with the laws, rules, and regulations governing the same. The definition may be construed to mean any person who has qualified and is licensed under the Oklahoma State Plumbing Licensing Law, who may operate as an individual, a firm, partnership, or corporation to engage in the business of plumbing, or the business of contracting to do, or furnish labor or labor and materials for the installation, repair, maintenance, or renovation of plumbing, according to the requirements of the Oklahoma State Plumbing Licensing Law.

State Law Reference: State Plumbing Licensing Law, 59 §§1001, et seq.

SECTION 5-312 LICENSE AND REGISTRATION REQUIRED; REGULATIONS.

A. No person shall conduct, carry on, or engage in the business of plumbing or act in the capacity of a plumbing contractor with the City without first having had issued to him a valid and unrevoked plumbing contractor's license by the Oklahoma State Health Department and a current plumbing contractor's registration certificate issued by the City.

B. No person shall labor at the trade of plumbing in the capacity of a journeyman plumber within the City without first having had issued to him a valid and unrevoked journeyman plumber's license by the Oklahoma State Health Department and a current journeyman plumber's registration certificate issued by the City.

C. No person shall labor at the trade of plumbing in the capacity of an apprentice plumber within the City without first having had issued to him a valid and unrevoked apprentice plumber registration certificate by the Oklahoma State Health Department and a current apprentice plumber registration certificate issued by the City.

D. This section shall not apply to the owner of a single-family dwelling performing necessary repairs, additions, or alterations to plumbing of such dwelling, excluding any work on connections to meters or mains, or work within a public easement or right-of-way.

SECTION 5-313 REGISTRATION FEE, SURETY BOND.

Every person applying for a City plumber's certificate shall, upon acceptance of his qualifications by the City at the time he makes such application, pay to the City the fees as provided in the fee schedule.

SECTION 5-314 ISSUANCE OF PLUMBER'S REGISTRATION CERTIFICATES.

The City shall issue plumbing certificates of registration pursuant to the following provisions:

1. A plumbing contractor's certificate shall be issued to every person who makes application for such certificate, pays the required fee, and presents a valid, unrevoked license issued by the Oklahoma State Health Department for contractor status. The applicant shall also post the required bond with the City.

2. A journeyman plumber's certificate shall be issued to every person who makes application for such certificate, pays the required fee, and presents a valid, unrevoked license issued by the Oklahoma State Health Department for journeyman status.

3. An apprentice plumber's certificate shall be issued to every person who makes application for such certificate, pays the required fee, and presents a valid, unrevoked license issued by the Oklahoma State Department of Health for apprentice plumber status.

CHAPTER 4

ELECTRIC CODE

ARTICLE A

GENERAL PROVISIONS

Section 5-401	Adoption of National Electric Code.
Section 5-402	Provisions declared to be minimum requirements.
Section 5-403	Electrical installation permit required; exception.
Section 5-404	Inspection, not to conceal.
Section 5-405	Denial of permit; certificate of inspection, utility companies.
Section 5-406	Wiring protection; when inspected.
Section 5-407	Defective workmanship and materials.
Section 5-408	Inspection no relief from responsibility.

ARTICLE B

ELECTRICAL CONTRACTORS AND ELECTRICIAN'S REGISTRATION

Section 5-421	Definitions.
Section 5-422	Registration required.
Section 5-423	Classification of registration certificate.
Section 5-424	Registration fee, annual renewal fee.
Section 5-425	Journeyman electrician's registration certificate.
Section 5-246	Electrical apprentice's registration certificate.

ARTICLE A

GENERAL PROVISIONS

SECTION 5-401 ADOPTION OF NATIONAL ELECTRICAL CODE.

The *National Electric Code (NFPA 70) 2005 Edition* is hereby adopted by reference, and copies are on file in the office of the City Clerk of the City of Piedmont, Oklahoma. Any electrical work performed shall comply with the provisions thereof.

SECTION 5-402 PROVISIONS DECLARED TO BE MINIMUM REQUIREMENTS.

The provisions of the National Electrical Code, latest edition, in their interpretation and application shall be held to be minimum requirements adopted for the promotion of public health, safety and general welfare. Wherever any of the provisions or requirements of the National Electrical Code are inconsistent with the provisions of the city code or state statutes presently existing or enacted in the future, the provisions or requirements containing the most restrictive regulation shall apply and govern.

SECTION 5-403 ELECTRICAL INSTALLATION PERMIT REQUIRED; EXCEPTION.

A. No person shall begin work on any electrical facilities installation within the corporate limits of the city without first securing the required permit from the electrical inspector; however, no permit shall be required for minor work such as repairing flush switches, replacing fuses, replacing light fixtures and receptacles.

B. Permits shall be issued only to electrical contractors with current unrevoked state licenses and current unrevoked city registration certificates or to homeowners who qualify as set forth herein.

SECTION 5-404 INSPECTION, NOT TO CONCEAL.

A. In making inspection of new work "rough-in", the electrical inspector hall leave a tag in the cabinet plainly stating whether the work has been approved and is ready to conceal, or that work is not standards and must not be covered until approved by the electrical inspector.

B. It is unlawful for any person to conceal or cause to be concealed any electrical conductors used for electric lights, heat or power until such time as he knows the work has been approved by the electrical inspector. A tag in the cabinet properly signed and dated so stating the inspector's approval will be sufficient notice.

SECTION 5-405 DENIAL OF PERMIT; CERTIFICATE OF INSPECTION, UTILITY COMPANIES.

A. The electrical inspector shall have and is hereby given the authority to refuse to issue a permit for the installation of electrical facilities in or on any building when, in his estimation, the wiring done or proposed to be done is unsafe or not in accordance with the provisions of this chapter. If after a permit is issued the work installed under such permit for any reason does not comply with the regulations of this chapter, the inspector shall refuse to issue a certificate of inspection.

B. No electric light or power company shall connect to any electrical facilities of any kind whatsoever until furnished with a certificate of inspection or a permit for such connection duly executed by the electrical inspector. All electric light or power companies, whether operating under a regular franchise granted by the city or not, shall, upon written notice from the electrical inspector, disconnect from any circuit or service designated by the notice from the inspector.

C. The electrical inspector shall enforce all the provisions of this chapter whenever he shall be notified by any citizen of any violation of this chapter or of the existence of any dangerous or defective electrical facilities, he shall make an investigation thereof without delay.

D. Whenever any electrical facilities are found by the electrical inspector to be unsafe or defective or in an insecure condition, he shall notify the owner or person in control thereof, in writing, to repair or remove the defective facilities, and upon such person's failure to repair or remove same within such time as the inspector may deem necessary, which time shall be stated in such notice, the inspector shall cause the service connected to such facilities to be discontinued. (Prior Code, Sec. 4-34, in part)

SECTION 5-406 WIRING PROTECTION; WHEN INSPECTED.

A. No owner, contractor or worker shall in any manner interfere with any electrical facilities being installed in or on any building. If in the course of the erection of a building the facilities is in such position as to interfere with its erection or completion as called for by the plans, notice shall be immediately given the person installing the facilities, and the needed change shall be made by such person upon approval for such modification by the electrical inspector. Upon inspecting the electrical facilities of any building, the electrical inspector shall leave notice in the form of a tag or label attached to the electrical facilities. The notice shall clearly state whether the electrical facility is approved or is to be kept open for corrections; and no person shall lath, seal or in any way conceal any electrical facility until he is informed and knows that such wiring has been approved.

B. The electrical inspector shall furnish such person or licensed electrical contractor with a certificate, which shall state that such electrical facility is approved only so far as "roughing-in" is concerned, and that it is not the final certificate, and does not entitle the electric light or power company to connect its service to electrical facilities. Certificate entitling the electric light or power company to connect its service to electrical facilities shall be furnished only after all fixtures are in place and final inspection made.

SECTION 5-407 DEFECTIVE WORKMANSHIP AND MATERIALS.

Any person, firm or corporation engaged in the business of electrical contracting for the installation of wiring and apparatus for electric light, heat or power in the city, who fails to correct promptly any defects in any work done by him contrary to this code, after having been notified by the electrical inspector, shall not be issued any further permits until such defects have been corrected; and in any case, in which any person shall continue to or persistently violate the code of the city in regard to electrical work, or the orders of the electrical inspector in relation to same, the registration and permit of such person shall be suspended or revoked.

SECTION 5-408 INSPECTION NO RELIEF FROM RESPONSIBILITY.

This code shall not be construed to relieve or lessen the responsibility of any person, partnership or corporation owning or operating or installing electric wires, appliances, apparatus, construction or equipment for the damage to property or persons injured by any defect therein. Nor shall the city, or any agent thereof, be deemed to assume such liability by reason of the inspection authorized herein or the certificate of inspection issued by the electrical inspector.

ARTICLE B

ELECTRICAL CONTRACTORS AND ELECTRICIANS REGISTRATION

SECTION 5-421 DEFINITIONS.

As used in this chapter:

1. "Administrative authority" or "electrical inspector" mean the electrical inspector, or the building official or his designee if no electrical inspector is appointed;

2. "Electrical apprentice" means any person sixteen (16) years of age or older whose principal occupation is the learning of and assisting in the installation of electrical work under the direct supervision of a licensed journeyman electrician or electrical contractor. Each apprentice shall be in possession of a valid electrical apprentice license issued by the state;

3. "Electrical contractor" means any person skilled in the planning, superintending and practical installation of electrical facilities who is familiar with the laws, rules and regulations governing such work. "Electrical contractor" also means any individual, firm, partnership, corporation or business performing skills of an electrical contractor, of an electrician or the business of contracting or furnishing labor or labor and materials for the installation, repair, maintenance or renovation of electrical facilities according to the provisions of the Electrical License Act, Sections 1680 et seq. of Title 59 of the Oklahoma Statutes. Each electrical contractor shall be in possession of a valid electrical contractor license issued by the state;

4. "Electrical facilities" means all wiring, fixtures, apparatus, appurtenances and appliances for and in connection with a supply of electricity within or adjacent to any building, structure or conveyance on the premises but not including the connection with a power supply meter or other power supply source;

5. "Electrical sign contractor" means any person engaged in the business of manufacturing, assembling, wiring, rewiring, installing, erecting, repairing or altering interior or exterior electric signs;

6. "Electrician" means any person engaged in electrical wiring in the city as defined in this chapter; and

7. "Journeyman electrician" means any person other than an electrical contractor who engages in the actual installation, alteration, repair or renovation of electrical facilities unless specifically exempted by the provisions of the Electrical License Act. Each journeyman electrician shall be in possession of a valid electrical contractor license issued by the state.

SECTION 5-422 REGISTRATION REQUIRED.

A. No person shall conduct, carry on or engage in the business of electrical installation, maintaining, altering or repairing any wiring, fixtures or equipment for the conducting of electrical current or act in the capacity of an electrical contractor without first having issued to him a valid and unrevoked electrical contractor's license by the Oklahoma State Health Department and an electrical contractor's registration certificate issued by the city.

B. No person shall labor at the trade of electrician in the capacity of a journeyman electrician within the city without first having had issued to him a valid and unrevoked journeyman electrician's license issued by the Oklahoma State Health Department and a journeyman electrician's registration certificate issued by the city.

C. No person shall labor at the trade of electrician in the capacity of an electrical apprentice within the city without first having had issued to him a valid and unrevoked apprentice electrician registration certificate by the Oklahoma State Health Department and an apprentice electrician certificate issued to him by the city. (Prior Code, Sec. 4-54, in part)

State Law Reference: Electrical licensing act, 59 O.S. Secs. 1680 et seq.

SECTION 5-423 CLASSIFICATION OF REGISTRATION CERTIFICATE.

There shall be three (3) classes of electrical registration certificates, which shall be known as follows:

1. Electrical contractor;

2. Journeyman electrician; and

3. Electrical apprentice.

SECTION 5-424 REGISTRATION FEE, ANNUAL RENEWAL FEE.

A. The registration and renewal fees and bond requirements of electrical contractors, journeyman electricians and electrical apprentices shall be as provided in the fee and bond schedules.

B. Every person applying for an electrical registration certificate shall, upon acceptance of his qualifications by the city, at the time he makes such application, pay to the city the fees as provided in the fees schedule and post bond as required in this chapter.

C. Applicants for registration shall pay to the city the required registration fees. The fees shall be paid after all requirements are met.

D. Annual renewal of registration certificates shall be accomplished by payment of the renewal fees as provided herein. A receipt and registration certificate for the appropriate year shall be issued by the city upon payment of annual renewal fees.

E. A registration certificate shall be issued to the person named on the certificate who shall be known as the holder of the certificate.

F. A registration certificate shall expire annually.

G. Renewal applications and fees must be received by the city prior to the expiration of the certificate or else the applicant must proceed in the manner required of a new or initial applicant.

H. This section shall not apply to the owner of a single family dwelling making

necessary repairs, additions or alterations to the electrical wiring of such dwelling. (Prior Code, Sec. 4-54, in part)

Cross Reference: Fee schedule, Appendix 1 of this code.

SECTION 5-425 JOURNEYMAN ELECTRICIAN'S REGISTRATION CERTIFICATE.

A. No person shall work as a journeyman electrician unless he holds a valid unrevoked license and registration certificate as provided for herein. No journeyman electrician shall perform any electrical wiring installation except through a licensed and registered electrical contractor and shall perform all installations, alterations and repairs of electrical wiring, fixtures and equipment in accordance with this code.

B. A journeyman electrician's registration certificate shall be issued only to an individual and shall not be transferable or assignable.

C. No person shall allow the use of his journeyman electrician's registration certificate, whether directly or indirectly, by any other person for any purpose.

SECTION 5-426 ELECTRICAL APPRENTICE'S REGISTRATION CERTIFICATE.

A. No person shall act or serve as an electrical apprentice as herein defined for more than ten (10) days before he shall have been issued an electrical apprentice's registration certificate.

B. No electrical apprentice shall permit the use of his registration certificate, either directly or indirectly, by any other person for any purpose.

C. Under no circumstances shall an electrical apprentice perform any duty or phase of electrical installation unless a journeyman electrician or electrical contractor is on the project during such installation and such electrical apprentice is directly supervised by a journeyman electrician or electrical contractor.

CHAPTER 5

MECHANICAL CODE

ARTICLE 1

GENERAL PROVISIONS

Section 5-501	Adoption of mechanical code.
Section 5-502	Amendments to mechanical code.
Section 5-503	Permits.
Section 5-504	Provisions declared to be minimum requirements.
Section 5-505	Mechanical official.
Section 5-506	Violations and penalties.

ARTICLE B

REGISTRATION

Section 5-511	Definitions.
Section 5-512	License and registration required.
Section 5-513	Registration fee, surety bond.
Section 5-514	Insurance of registration certificates.

SECTION 5-501 ADOPTION OF MECHANICAL CODE.

That a certain document, copies of which are on file in the office of the City Clerk of the City of Piedmont, Oklahoma, being marked and designated as the *International Mechanical Code, 2006 Edition,* including Appendix Chapter A as published by the International Code Council, be and is hereby adopted as the Mechanical Code of the City of Piedmont, Oklahoma, for regulating and governing the design, construction, quality of materials, erection, installation, alteration, repair, location, relocation, replacement, addition to, use or maintenance of mechanical systems as herein provided; providing for the issuance of permits and collection of fees therefore; and each and all of the regulations, provisions, penalties, conditions, and terms of said Mechanical Code on file in the office of the City Clerk are hereby referred to, adopted, and made a part hereof as if fully set out in this ordinance, with the additions, insertions, deletions and changes, if any, prescribed in Section 5-502 of this ordinance.

SECTION 5-502 AMENDMENTS TO MECHANICAL CODE.

The following sections are hereby revised:

Section 101.1. Insert : City of Piedmont, Oklahoma
Section 106.5.2. Insert: as adopted by Resolution of the City Council
Section 106.5.3. Insert: 50% - 50%
Section 108.4. Insert: $200.00 - 0 days
Section 108.5. Insert: $100.00 - $200.00

Cross Reference: Fee schedule, Appendix 1 of this Code. See also §5-701, et seq. of this Code on gas pipelines and adoption of National Fuel Gas Code.

SECTION 5-503 PERMITS.

A. No person shall engage in any work covered by the mechanical code without first securing a permit from the City.

B. The permit fee shall be as set by the City by motion or resolution.

SECTION 5-504 PROVISIONS DECLARED TO BE MINIMUM REQUIREMENTS.

The provisions of the *BOCA National Mechanical Code*, latest Edition, in their interpretation and application shall be held to be minimum requirements adopted by the promotion of public health, safety, and general welfare. Wherever any of the provisions or requirements of this code are inconsistent with the provisions of the City code or State statutes presently existing or enacted in the future, the provisions of requirements containing the most restrictive regulation shall apply and govern.

SECTION 5-505 MECHANICAL OFFICIAL.

A. The term "administrative authority" or "mechanical official" means the mechanical official, or the Building Official, or his designee if no mechanical official is appointed through the chain of authority that is in effect when applying this code.

B. The administration and enforcement of the mechanical code shall be the responsibility of the mechanical official through the departmental structure that is in effect when applying this code.

SECTION 5-506 VIOLATIONS AND PENALTIES.

A. Any person, firm, or corporation violating any provisions of this code shall be deemed guilty of an offense, and upon conviction thereof shall be punishable as provided by Section 1-108 of the City's Code of Ordinances, or by revocation of the applicable City license. Each separate day or any portion thereof during which any violation of this code occurs or continues shall be deemed to constitute a separate offense, and upon conviction thereof shall be punishable as herein provided.

B. The issuance or granting of a permit or approval of plans and specifications shall not be deemed or construed to be a permit for, or an approval of, any violation of any of the

provisions of this code. No permit presuming to give authority to violate or cancel the provisions of this code shall be valid except insofar as the work or use which it authorized is lawful. The issuance or granting of a permit or approval of plans shall not prevent the mechanical official from thereafter requiring the correction of errors in the plans and specifications or from preventing construction operations being carried on thereunder when in violation of this code or any other ordinance or from revoking any certificate of approval when issued in error.

ARTICLE B

REGISTRATION

SECTION 5-511 DEFINITIONS.

As used herein, the following terms shall have the meanings respectively ascribed to them in this section:

1. "Apprentice" or "mechanical apprentice" means any person sixteen (16) years of age or older whose principal occupation is learning mechanical work on the job under the direct supervision of a journeyman or contractor;

2. "Mechanical contractor" or "contractor" means any person engaged in the business of planning, contracting, supervising or furnishing labor or labor and materials for mechanical work;

3. "Mechanical journeyman" or "journeyman" means any person other than a contractor or apprentice who engages in mechanical work; and

4. "Mechanical work" means the installation, maintenance, repair, or renovation, in whole or in part, of any heating system, cooling system, mechanical refrigeration system or ventilation system or any equipment or material including process piping used in the installation, maintenance, repair, or renovation of such systems; provided that minor repairs are excluded.

State Law Reference: State Mechanical License Act, 59 O.S. Secs. 1850.1 et seq.

SECTION 5-512 LICENSE AND REGISTRATION REQUIRED.

A. No person shall conduct, carry on or engage in the business of mechanical work or act in the capacity of a mechanical contractor within the city without first having had issued to him a valid and unrevoked mechanical contractor's license by the Oklahoma State Health Department and a current mechanical contractor's registration certificate issued by the city.

B. No person shall labor at the trade of mechanical work in the capacity of a mechanical journeyman within the city without first having had issued to him a valid and unrevoked mechanical journeyman's license by the Oklahoma State Health Department and a current mechanical journeyman registration certificate issued by the city.

C. No person shall labor at the trade of mechanical work in the capacity of a mechanical apprentice within the city without first having had issued to him a valid and unrevoked mechanical apprentice registration certificate by the Oklahoma State Health Department and a current mechanical apprentice registration certificate issued to him by the city.

D. Any city certificate of registration issued to an applicant shall be issued only in the same category as the state license possessed by the applicant. It shall further be subject to all limitations, conditions or restrictions imposed on the state license possessed by the applicant. The category of the city certificate of registration shall be indicated on the face of the certificate. The categories for certificates of registration shall be the following:

1. Unlimited mechanical air conditioning contractor;

2. Limited mechanical air conditioning contractor;

3. Unlimited heating contractor;

4. Limited heating contractor;

5. Refrigeration contractor;

6. Sheet metal contractor;

7. Natural gas piping contractor;

8. Unlimited mechanical air conditioning journeyman;

9. Limited mechanical air conditioning journeyman;

10. Unlimited heating journeyman;

11. Limited heating journeyman;

12. Refrigeration journeyman;

13. Sheet metal journeyman; and

14. Natural gas piping journeyman.

These categories shall have the same meanings ascribed to them by state law and regulations.

E. Unless sooner revoked or suspended as provided for by this chapter, the city certificate of registration shall be for a term of one year from issuance corresponding with state licensing requirements.

F. A certificate of registration issued to a mechanical contractor or journeyman shall authorize the certificate holder to perform mechanical work only as authorized by state law and regulations adopted pursuant thereto. All mechanical work performed by a mechanical contractor or journeyman shall be strictly limited to the category or categories in which such contractor or journeyman is licensed by the state and registered with the city.

G. This section shall not apply to the owner of a single family residential dwelling performing necessary repairs,additions or alterations to the heat and air or gas service to such dwelling, excluding any work on connections to meters or mains, work within a public easement or right of way. (Prior Code, Sec. 4-55,as amended)

SECTION 5-513 REGISTRATION FEE, SURETY BOND.

Every person applying for a city mechanical certificate shall, upon acceptance of his qualifications by the city at the time he makes such application, pay to the city the fees as provided in the fee schedule.

Cross Reference: Fee schedule, Appendix 1 of this code.

SECTION 5-514 ISSUANCE OF REGISTRATION CERTIFICATES.

The city shall issue mechanical certificates of registration pursuant to the following provisions:

1. A mechanical contractor's certificate shall be issued to every person who makes application for such certificate, pays the required fee, and presents a valid, unrevoked license issued by the Oklahoma State Health Department for contractor status;

2. A mechanical journeyman's certificate shall be issued to every person who makes application for such certificate, pays the required fee, and presents a valid, unrevoked license issued by the Oklahoma State Health Department for journeyman status; and

3. A mechanical apprentice certificate shall be issued to every person who makes application for such certificate, pays the required fee, and presents a valid, unrevoked license issued by the Oklahoma State Department of Health for apprentice status.

CHAPTER 5A

COMMUNICATIONS TOWERS

Section 5A-501	Definitions.
Section 5A-502	Exclusion and application process.
Section 5A-503	Criteria for review of applications.
Section 5A-504	Facility requirements.
Section 5A-505	Television and radio broadcast towers.
Section 5A-506	Height of communication tower.

SECTION 5A-501 DEFINITIONS.

1. *ANTENNA AND ANTENNA ARRAY* - The arrangement of wires or metal rods used in transmission, retransmission, and/or receptions of radio, television, electromagnetic, or microwave signals (includes microwave reflectors/antennas).

2. *ANTENNA SUPPORT STRUCTURE OR TOWER* - Any tower, mast pole, tripod, lattice, box frame, or other structure utilized for the purpose of transmission, retransmission, and/or reception of electromagnetic radio, television, or microwave signals.

3. *MICROWAVE REFLECTOR/ANTENNA* - An apparatus constructed of solid, mesh, or perforated materials of any configuration that is used to receive and/or transmit microwave signals from a terrestrial or orbitally located transmitter or transmitter relay. This definition is meant to include, but is not limited to, what are commonly referred to as satellite receive only earth stations (T.V.R.O.S.) or satellite dishes.

4. *COMMUNICATIONS OPERATIONS (AMATEUR)* - The transmission, retransmission, and/or reception of radio, television, electromagnetic, or microwave signals for private or personal use and not for the purpose of operating a business and/or for financial gain.

5. *COMMUNICATIONS OPERATIONS (COMMERCIAL)* - The transmission, retransmission, and/or reception of radio, television, electromagnetic, or microwave signals primarily for the purpose of operating a business and/or financial gain.

6. *APPLICANT* - Any person, corporation, or other establishment seeking an approved location and design for a communications tower and subsequent site.

7. *HEIGHT* - The total elevation of the antenna, whether mounted to a building, tower, or other structure.

8. *TELEVISION AND RADIO BROADCAST TOWERS* - A structure used to house an antenna designed for the transmission or retransmission of radio, television, electromagnetic, or microwave signals, but shall not include Wireless Communications Facilities.

9. *WIRELESS COMMUNICATIONS (FACILITIES)* - Any personal wireless services as defined in the Telecommunications Act of 1996 ,which includes FCC licensed commercial wireless telecommunications services, including cellular personal communications services, specialized mobile radio, enhanced specialized mobile radio, paging, and similar services as defined. Wireless Communications does not include commercial broadcast of radio and television signals.

SECTION 5A-502 EXCLUSIONS AND APPLICATION PROCESS.

1. *EXCLUSIONS.*

A. Any tower installed by a government entity that is for emergency communications systems is exempt from these standards.

B. Any antenna of less than thirty-five (35) feet in total height is exempt from this ordinance, but subject to existing rules and regulations and building permit requirements.

C. All existing structures established prior to this ordinance are permitted as they were previously.

D. All antennas used exclusively for amateur communications are exempt from this ordinance.

2. *APPLICATION FOR COMMUNICATION TOWER CONDITIONAL USE PERMIT.*

A. All new communication antennas and towers, and radio and television broadcast towers require a conditional use permit if they exceed thirty-five (35) feet in height.

B. Applications must be made at least thirty (30) days prior to the following planning commission meeting to be heard. All applications must be reviewed by the City Planning and Zoning Commission, and approved by the City Council of the City of Piedmont.

C. Plans for the entire facility certified by a licensed engineer must be on file with the City building official at the time when application is made. These plans must contain the following:

(1) A site plan drawn to scale specifying the location of tower(s), guy anchors (if any), transmission or support building(s), and other accessory uses, parking areas, access roads, and detailed landscaped areas. Plan must also include provisions for proper drainage.

(2) A report from a registered structural or civil engineer indicating the tower foundation height and design, structure, installation, and total anticipated capacity of the structure (including the number and types of antennas which could be accommodated). This data shall satisfactorily demonstrate that the proposed tower conforms to all applicable requirements of

the International Building Codes and American National Standards Institute Standards (ANSI - EIA - TIA - 222).

3. *FEES FOR APPLICATION AND PERMIT.* Application processing fee is One Thousand Dollars ($1,000.00), which is nonrefundable.

A. Permit fees:

(1) The permit fee for construction of a communications tower will be an additional Two Thousand Five Hundred Dollars ($2,500.00), payable at the time of requesting the building permit, and said fee is non-refundable.

B. Sales tax:

(1) All commercial tower permits must reflect the City as the point of sale with regard to communications using said tower. Piedmont sales tax shall be collected as required by applicable sales tax ordinances.

4. *LEASING PUBLIC PROPERTIES.* The City of Piedmont encourages applicants to locate antennas on public facilities.

5. *HEARINGS.* All antenna applications will be heard by the planning and zoning commission, and its recommendation shall be forwarded to the City Council for approval or disapproval of antenna applications.

6. *OWNERSHIP LIST REQUIRED.* The application shall submit a list of names and addresses of all record property owners within a three hundred (300) feet radius of the exterior boundaries of the proposed site of the tower. Regardless of the distance requirement, the list shall include the names and addresses of all property owners who own property abutting the parcel on which the tower is located. Where the tower is located on leased property, then the list shall include those persons abutting the entire tract owned by the lessor. (For example: if the tower site is leased from a quarter section of land, then the owners abutting the quarter section would be notified.) The list shall be current and certified by a registered professional engineer, a registered land surveyor, attorney, or a bonded abstractor. Where the proposed tower exceeds one hundred (100) feet in height, then the list of surrounding property owners shall be extended to include those property owners within a radius of the site equal to three times the height of the proposed tower, plus all abutting land owners.

7. *NOTICE OF HEARING.* At least twenty (20) days prior to hearing before the planning and zoning commission the City Clerk shall mail a notice of public hearing to all persons within the areas described above in paragraph No. 6. The notice shall include the following: (a) legal description and approximate street address of area for location of the tower; (b) a brief description of the proposed tower; and (c) date, time, and place of public hearing.

SECTION 5A-503 CRITERIA FOR REVIEW OF APPLICATIONS.

1. All existing antennas must be constructed on public land or facilities on public land,

unless it is proven by the applicant that this requirement is ineffective, non-feasible, or impossible.

2. If location on public land is not possible, then all new antennas must be erected on an existing communications tower already located in Piedmont, Oklahoma, unless it is proven by the applicant that this requirement is ineffective or not feasible.

3. If co-location on an existing tower or location on public land is not effective, feasible or possible, then the Planning and Zoning Commission and City Council may consider approval of an antenna support structure in Agricultural (A-1), Commercial (C-1, C-2, C-3), or Industrial (I-1, I-2, I-3) zoning districts. The factors to be considered in review are:

A. Compatibility of tower with existing land uses.
B. Future land use plans of surrounding properties.
C. Topography of existing and surrounding property.
D. Potential for negative impact on surrounding property values.
E. Conformity with Comprehensive Land Use Plan.

SECTION 5-504 FACILITY REQUIREMENTS.

1. The following general requirements shall apply to all new wireless communications facilities:

A. Noise requirements. Equipment used in connection with a tower or antenna array shall not generate noise that can be heard beyond the site. This prohibition does not apply to air conditioning units no noisier than ordinary residential units or generator used in emergency situations where regular power supply for a facility is temporarily interrupted; provided, that any permanently installed generator shall be equipped with a functional residential muffler.

B. Compliance with federal regulations. Applicant shall comply with all applicable federal regulations. Proof of compliance shall be provided upon request of the Community Development Director.

C. Lighting and signage.

(1) Wireless communications facilities shall be lighted only if required by the Federal Aviation Administration (FAA). Security lighting or motion-activated lighting may be used around the base of a tower and within the wireless communication facility; provided, that the lighting is shielded in such a way that no light is directed towards adjacent properties or rights-of-way. If lighting is FAA required, then dual lighting of strobe and flashing red lights is required.

(2) Signs shall be limited to those needed to identify the property and the owner and warn of danger. No signs, symbols, identifying emblems, advertisements, flags, or banners shall be allowed on towers.

D. New Towers. New wireless communications towers shall meet the following

requirements:

(1) *Type of tower allowed.* New towers shall be limited to monopole-type structures capable of supporting at least three antennas.

(2) *Tower or antenna height limitations.* Towers or alternative tower structures are permitted to a maximum height of 120 feet.

(3) *Fall zone.* The minimum distance from the base of any tower to the property line on any abutting property shall be 125% of the height of the tower or required setback, whichever is greater. This setback is considered a "fall zone."

(4) *Camouflaging or stealth technology for new towers.* If the applicant demonstrates that it is not feasible to locate on an existing structure, towers shall be designed to be camouflaged to the greatest extent possible, including but not limited to, use of compatible building materials and colors, screening, landscaping, and placement within trees.

(5) *Color of towers.* To the extent that any antenna extends above the height of the vegetation immediately surrounding it, they shall be a neutral color, painted or unpainted, unless the FAA requires otherwise.

(6) *Information required to process new tower requests.*

(a) Provide a map of the geographic area that your project will serve;

(b) Provide a map that shows other existing or planned facilities that will be used for the wireless communication service provider who is making the application;

(c) Provide a map that shows other potential stand alone locations for your facility that have been explored;

(d) Provide a scaled site plan containing information showing the property boundaries, proposed tower, existing land use, surrounding land uses and zoning, access road(s) location and surface material, existing and proposed structures and topography. The plan shall indicate proposed landscaping, fencing, parking areas, location of any signage , specifications of proposed lighting of the facility, and specifications for all-weather access road.

(e) Describe why the proposed location is superior, from a community perspective, to other potential locations. Factors to consider in the community perspective should include: visual aspects, setbacks, and proximity of single-family residences;

(f) Describe your efforts to co-locate your facility on one of the poles or towers that currently exists, or is under construction. The applicant should demonstrate a good faith effort to co-locate with other carriers. The Planning

Commission may deny a permit to an applicant that has not demonstrated a good faith effort to provide for co-location. Such good faith effort includes:

(i) A survey of all existing structures that may be feasible sites for co-locating wireless communications facilities;

(ii) Contact with all other wireless communications facilities;

(iii) Sharing information necessary to determine if co-location is feasible under the design configuration most accommodating to co-location; and,

(iv) Letter from tower owner stating why co-location is not feasible.

(g) Describe how you will accommodate other antenna arrays that could co-locate on your facility. Describe how this accommodation will impact both your pole or tower, and your ground-mounted facilities. Provide documentation of your provider's willingness to accommodate other providers who may be able to co-locate on your facility.

(7) *Sight line representation.* A sight line representation shall be drawn from four points 90° apart and 100 feet from the proposed tower. Each sight line shall be depicted in profile, drawn at one inch equals 40 feet. The profiles shall show all intervening trees and buildings.

(8) *Structural integrity and inspections of towers.*

(a) The applicant shall provide a certification letter that states the tower meets or exceeds design criteria and all local, state, and federal requirements regarding the construction, maintenance, and operation of the tower.

(b) If a tower fails to comply with the requirements and criteria above and constitutes a danger to persons or property, then upon written notice being provided to the owner of the tower, the owner shall have thirty (30) days to bring such tower into compliance with such requirements and criteria. If the owner fails to bring such tower into compliance within thirty (30) days, the City may terminate the owner's conditional use permit and/or cause the removal of such tower (at the owner's expenses).

(c) By making application hereunder, the applicant agrees to regularly maintain and keep in a reasonably safe and workmanlike manner all towers, antenna arrays, fences, and outbuildings owned by applicant which are located in the City. The applicant further agrees to conduct inspections of all such facilities not less frequently than every twelve (12) months. The applicant agrees that said inspections shall be

conducted by one or more designated persons holding a combination of education and experience so that they are reasonably capable of identifying functional problems with the facilities.

(9) *Security fencing and anti-climbing device.* Through the use of security fencing, towers and equipment shall be enclosed by wood board fencing not less than six feet in height. The tower shall also be equipped with an appropriate anti-climbing device. The facility shall place signs indicating "No Trespassing," "High Voltage," or other pertinent information on the outside of the fence, unless it is decided that the goals of this ordinance would be better served by waiving this provision in a particular instance. Barbed wire fencing or razor wire shall be prohibited.

(10) *Vegetative screening requirements.* Wireless communications facilities shall be surrounded by buffers of dense tree growth and understory vegetation in all directions to create an effective year-round visual buffer. Trees and vegetation may be existing on the subject property or installed as part of the proposed facility, or a combination of both.

(11) *Setbacks from property lines.* Wireless communication facilities shall meet current setbacks as required by zoning, plus meet the fall zone requirements.

E. Co-Location. Applicants for co-location shall meet the following requirements:

(1) *Administrative approval of antenna co-locations and locations on other structures.* The Community Development Director, following an administrative review without requiring the issuance of a conditional use permit, may approve the following antenna installation:

(a) Locating on existing structures. Installation of an antenna on an existing structure other than a tower (such as a building, sign, light pole, electric transmission tower, and similarly scaled public utilities/facilities, water tower, or other free-standing, nonresidential structure), provided that the addition of the antenna does not add more than twenty (20) feet to height to the original structure;

(b) Locating on existing towers. Installation of an antenna on an existing tower of any height, and the placement of additional buildings or other supporting equipment used in connection with such additional antenna, so long as the proposed additions would add no more than twenty (20) feet in height to the original height of the tower. The addition or modification, to the extent possible, should be designated to minimize visibility; and,

(c) For the purpose of co-location, the applicant must submit information from a licensed professional engineer certifying the capacity of the tower for additional providers and a letter of intent

from the applicant indicating their intent to share space.

F. Other Requirements.

(1) *Wireless communications facilities placed on top of buildings.* When a wireless communications facility extends above the roof height of a building on which it is mounted, every effort shall be made to conceal the facility within or behind existing architectural features to limit its visibility from public ways. Facilities mounted on a roof shall be stepped back from the front facade in order to limit their impact on the building's silhouette.

(2) *Wireless communications facilities placed on side of buildings.* Antennas which are side-mounted on buildings shall be painted or constructed of materials to match the color of the building material directly behind them.

G. Existing Towers. All existing towers may be replaced with the same type and height of tower structure as currently exists. All replacement towers shall comply with this Chapter. All existing guyed towers shall be subject to the following conditions:

(1) A demolition permit shall be issued prior to a building permit being issued for the replacement tower;

(2) The demolition permit shall expire within ninety (90) days and shall require the existing tower to be demolished within ninety (90) days from issuance of the building permit for the replacement tower.

(3) The new tower shall be constructed as close as technically feasible to the existing tower.

(4) Additional antennas may be installed on an existing tower of any height, and additional buildings or other supporting equipment used in connection with such additional antennas may be placed at the tower site so long as the proposed additions would add no more than twenty (20) feet to the original height of the existing tower. The addition or modification, to the extent possible, should be designed to minimize visibility.

(5) The replacement structure may be increased in width to a maximum of thirty-six (36) inches. Existing guyed towers over thirty-six (36) inches shall not be increased in width with a replacement tower.

H. Abandoned antennas and towers. At such time that a licensed carrier abandons or discontinues operation of a wireless communication facility, such carrier will notify the City of the proposed date of abandonment or discontinuation of operations. Such notice shall be given no less than thirty (30) days prior to abandonment or discontinuation of operations. In the event the licensed carrier fails to give such notice, the wireless communications facility shall be considered abandoned upon such discontinuation of operations. Upon abandonment or discontinuation of use, the

carrier shall physically remove the wireless communications facility within ninety (90) days from the date of abandonment or discontinuation of use. "Physically remove" shall include, but not be limited to:

(1) Removal of antenna, equipment shelters, and security barriers from the subject property;

(2) Proper disposal of the waste materials from the site in accordance with local and state solid waste disposal regulations;

(3) Restoring the location of the wireless communications facility to its natural condition, except that any landscaping and grading shall remain in the after-condition.

I. Notification of change of ownership/operator. Upon assignment or transfer of a conditional use permit, or any of the rights thereunder to a new wireless telecommunications operator, the owner or operator shall provide written notice within thirty (30) days to the Community Development Director.

SECTION 5A-505 TELEVISION AND RADIO BROADCAST TOWERS.

Television and radio broadcast towers are allowed on private property as a special use granted by the City Council in the Agricultural, Commercial, and Industrial Zoning Districts, in accordance with the provisions contained in this Chapter. The following design standards are the minimum criteria that must be met:

1. *CONSTRUCTION* - The Federal Communication Commission (FCC) must authorize the height of the television or radio tower. Towers up to 200 feet in height must be of a monopole design. Guyed structures are permitted if taller than 200 feet, provided engineering data is provided that shows a collapsed structure will be contained within the area of the guy wires, and the entire facility is located on the applicant's property.

2. *SETBACK* - The tower must observe a setback from any property line equal to one hundred twenty-five percent (125%) of the height of the tower, but not less than two hundred (200) feet. Guy wire anchors must be located at least twenty-five (25) feet from any common property line.

3. *APPEARANCE* - No lights, signals, or illumination shall be permitted on any tower unless required by the Federal Communication Commission (FCC), the Federal Aviation Administration (FAA), or any City agency. If lighting is required, only "dual lighting" shall be allowed (white lights during the day, red lights at night). All lighting shall be the least intrusive on nearby properties. No commercial advertising, signage, or flags shall be allowed on any tower. Towers and accessory facilities should be colored or painted in muted tones that minimize their visibility, unless otherwise required by the FCC or FAA.

4. *LOCATION* - Any tower in excess of two hundred (200) feet in height must be

located at least one mile from any subdivision filed of record and served by public water and sewer systems.

5. *CO-LOCATION* - To minimize tower proliferation, all reasonable efforts should be made to co-locate facilities on existing or new towers. Provisions should be made on new television or radio towers to allow antennas for personal wireless service or mobile radio service systems.

6. *SITE DESIGN* - All proposed or contemplated structures, towers, parking, and fencing must be included on a proposed site plan, and particular attention should be paid to screening and landscaping which would mitigate any visually intrusive elements from nearby property owners.

7. *NOTICE* - Because of the potential visual impact of all broadcast towers, the notification area for any tower needing special use approval shall include all property owners within one-half (1/2) mile of the applicant's property.

8. *PROCEDURE AND CRITERIA* - The procedures and criteria set forth in Sections 501 through 504 of this ordinance, except as modified in this subsection, shall apply to television and radio broadcast towers.

SECTION 5A-506 HEIGHT OF COMMUNICATION TOWER.

Notwithstanding Section 6-3 of the Piedmont Zoning Ordinance, communication towers may exceed the height limitations of the zoning district in which located as provided in this ordinance.

CHAPTER 6

FIRE PREVENTION CODE

Section 5-601	Adoption of fire code.
Section 5-602	Fire prevention.
Section 5-603	Amendments to fire code.
Section 5-604	Provisions declared to be minimum requirements.
Section 5-605	Modifications of the fire prevention code authorized.
Section 5-606	New materials, processes or occupancies which may require permits.
Section 5-607	Appeals.
Section 5-608	Life safety code adopted.
Section 5-609	Liquefied petroleum gas code adopted, penalty.
Section 5-610	Adoption of fuel gas code.
Section 5-611	Amendments to the fuel gas code.

SECTION 5-601 ADOPTION OF FIRE CODE.

That a certain document, copies of which are on file in the office of the City Clerk of the City of Piedmont, being marked and designated as the *International Fire Code, 2006 Edition,* including Appendix Chapters A and C through G, as published by the International Code Council, be and is hereby adopted as the Fire Code of the City of Piedmont, Oklahoma, for regulating and governing the safeguarding of life and property from fire and explosion hazards arising from the storage, handling, and use of hazardous substances, materials, and devices, and from conditions hazardous to life or property in the occupancy or buildings and premises as herein provided; providing for the issuance of permits and collection of fees therefor; and each and all of the regulations, provisions, penalties, conditions, and terms of said Fire Code on file in the office of the City Clerk are hereby referred to, adopted, and made a part hereof, as if fully set out in this ordinance, with the additions, insertions, deletions, and changes, if any, prescribed in Section 5-603 of this ordinance.

SECTION 5-602 FIRE PREVENTION.

The fire prevention code shall be enforced by the division of fire prevention in the Fire Department, which is hereby established and which shall be operated under the supervision of the Chief of the Fire Department.

SECTION 5-603 AMENDMENTS TO FIRE CODE.

The following sections are hereby revised to read as follows:

Section 101.1 Insert: City of Piedmont, Oklahoma.
Section 109.3 Insert: $200.00 - 0 days
Section 111.4 Insert: $100.00 - $200.00

That the geographic limits referred to in certain sections of the 2006 *International Fire Code* are hereby established as follows:

Section 3204.3.1.1 (geographic limits in which the storage of flammable cryogenic fluids in stationary containers is prohibited): within 300 feet of church, school, or residence.

Section 3404.2.9.5.1 (geographic limits in which the storage of Class I and Class II liquids in above-ground tanks outside of buildings is prohibited): within 300 feet of church, school, or residence.

Section 3406.2.4.4 (geographic limit in which the storage of Class I and Class II liquids in above-grounds tanks is prohibited): within 300 feet of church, school, or residence.

Section 3804.2 (geographic limits in which the storage of liquefied petroleum gas is restricted for the protection of heavily populated or congested areas): within 300 feet of church, school, or residence.

SECTION 5-604 PROVISIONS DECLARED TO BE MINIMUM REQUIREMENTS.

The provisions of the *Fire Prevention Code*, latest edition, in their interpretation and application, shall be held to be minimum requirements adopted for the promotion of public health, safety, and general welfare. Wherever any of the provisions or requirements of this code are inconsistent with the provisions of the City code or State statutes presently existing or enacted in the future, the provisions or requirements containing the most restrictive regulation shall apply and govern.

SECTION 5-605 MODIFICATIONS OF THE FIRE PREVENTION CODE AUTHORIZED.

The Fire Chief, with approval of the City Council, shall have the power to modify any of the provisions of the fire prevention code upon application in writing by the building owner or lessee, or his duly authorized agent, when there are practical difficulties in the way of carrying out the strict letter of the code, provided that the spirit of the code shall be observed, public safety secured, and substantial justice done. The particulars of such modifications when granted shall be entered upon the records of the Fire Department, and a signed copy shall be furnished the applicant.

SECTION 5-606 NEW MATERIALS, PROCESSES OR OCCUPANCIES WHICH MAY REQUIRE PERMITS.

The Building Official, the Chief of the Fire Department, and the City Manager shall act as a committee to determine and specify, after giving affected persons an opportunity to be heard, any new materials, processes, or occupancies which shall require

permits, in addition to those now enumerated in the code. The Fire Chief shall post such list in a conspicuous place in his office and distribute copies thereof to interested persons.

SECTION 5-607 APPEALS.

Whenever the Fire Chief or his designee shall disapprove an application or refuse to grant a permit or license applied for, or when it is claimed that the provisions of the code do not apply, or that the true intent and meaning of the code have been misconstrued or wrongly interpreted, the applicant may appeal to the Board of Adjustment of the City within thirty (30) days from the date of the decision appealed from.

SECTION 5-608 LIFE SAFETY CODE ADOPTED.

There is hereby adopted for the purposes of establishing rules and regulations for the protection of the public safety from the hazards of fire, smoke, fumes, etc., that certain code known as the *National Fire Protection Association Life Safety Code*, being particularly the latest edition thereof and the whole thereof, save and except such portions thereof as are hereinafter deleted, modified, or amended. Not less than one copy has been and now is filed in the office of the City Clerk. The code is hereby adopted and incorporated as fully as if set out at length herein.

SECTION 5-609 LIQUEFIED PETROLEUM GAS CODE ADOPTED, PENALTY.

A. *Pamphlet No. 58, Storage and Handling of Liquefied Petroleum Gases*, issued by the National Fire Protection Association, the latest edition thereof, is hereby adopted and incorporated herein by reference to govern liquefied petroleum gas.

B. It is unlawful for any person to manufacture, fabricate, assemble, install, or repair any system, container, apparatus, or appliance to be used for the transportation, storage, dispensing, or utilization of liquefied petroleum gas, or to transport, handle, or store such gas unless such person shall comply with all the provisions of State law and this chapter.

C. All persons, firms, corporations, or government entities which own or operate underground flammable or combustible liquid tanks and associated underground piping shall test the tanks and piping for tightness at least once per year. The test shall be witnessed and certified by the Fire Department. The test shall consist of five (5) pounds per square inch of pressure put on the tank and piping for a period of thirty (30) minutes. Any reduction of tank contents or loss of air pressure experienced during the test shall constitute test failure. The Fire Department shall then order the tank emptied and associated equipment shut down, until such time as the faulty equipment is repaired or replaced and retested.

SECTION 5-610 ADOPTION OF FUEL GAS CODE.

That a certain document, copies of which are on file in the office of the City Clerk of the City of Piedmont, being marked and designated as the *International Fuel Gas*

Code, 2006 Edition, including Appendix Chapters A through D, as published by the International Code Council, be and is hereby adopted as the Fuel Gas Code of the City of Piedmont, Oklahoma, for regulating and governing fuel gas systems and gas-fired appliances as herein provided; providing for the issuance of permits and collection of fees therefor; and each and all of the regulations, provisions, penalties, conditions, and terms of said Fuel Gas Code on file in the office of the City Clerk are hereby referred to, adopted, and made a part hereof, as if fully set out in this ordinance, with the additions, insertions, deletions, and changes, if any, prescribed in Section 5-611 of this ordinance.

SECTION 5-611 AMENDMENTS TO THE FUEL GAS CODE.

The following additions, insertions, and changes are adopted to the fuel gas code:

Section 101.1 Insert: City of Piedmont, Oklahoma.
Section 106.5.2 Insert: as adopted by Resolution of the City Council.
Section 106.5.3 Insert: 50% - 50%
Section 108.4 Insert: $500.00 - 0 days
Section 108.5 Insert: $500.00 - $500.00

CHAPTER 7

MOBILE HOME REGULATIONS

Section 5-701	Mobile home regulations adopted.
Section 5-702	Mobile home regulations, permits, anchoring.
Section 5-703	Use of recreational vehicles, travel trailers and mobile homes as temporary housing following a disaster.
Section 5-704	Penalty.

SECTION 5-701 MOBILE HOME REGULATIONS ADOPTED.

The city's mobile home and trailer regulations, as adopted by Ordinance No. 63, May 2, 1966, and all amendments thereto, is hereby adopted and incorporated herein by reference, applicable in the city as fully as if set out at length herein. (Prior Code, Sec. 23-1 to 23-88).

SECTION 5-702 MOBILE HOMEREGULATIONS, PERMITS, ANCHORING.

A. For the purpose of this section:

1. "Accepted engineering practice" means that which conforms to accepted principles, tests, or standards of nationally accepted technical or scientific authorities;

2. "House trailer" means the same as mobile home;

3. "Mobile home" means a structure of vehicular portable design, designed or manufactured for human occupancy, build on a chassis, designed to be moved from one site to another, and to be used with or without a permanent foundation, whether or not the wheels have been attached thereto or removed therefrom;

4. "Owner" means the person having possession or control of the land where a mobile home is located and shall include, but not be limited to, lessor, lessee, licensor or licensee; and

5. "Parking space for mobile home" means any tract or land where a mobile home is located for occupancy, or is connected to any utility service.

B. Except as provided in this section, the use of a house trailer or mobile home for human occupancy is prohibited unless the house trailer or mobile home is in a legally established and operated mobile home park, unless the use is authorizes by the zoning ordinances of the city, and unless the procedures for securing such occupancy authorizations have been complied with. Any occupancy in violation of this subsection shall also constitute a nuisance.

C. The owner of a tract of land containing five (5) acres or more within the city may secure a temporary permit not to exceed eighteen (18) months duration to place a house trailer or

mobile home thereon and reside therein during the actual construction of a home on the tract on the following terms and conditions:

1. An application for such temporary permit may accompany the application for a building permit to construct the home on the premises or may be submitted after the building permit has been applied for or issued. In any event, the temporary permit shall not be issued unless or until a building permit has been secured for the premises;

2. In addition to the information ordinarily required for securing a building permit, there must be submitted to and approved by the building official plans and specifications for the home to be constructed, and also submitted satisfactory evidence that adequate arrangements have been made to finance the construction of the home and that actual construction will be commenced and prosecuted with reasonable diligence to its conclusion. In addition, any other reasonable requirement may be made to assure the good faith of the applicant before the temporary permit is issued;

3. When the construction of the home is completed, or if construction of the home is abandoned or is not being prosecuted with reasonable diligence, or if the property is sold, the temporary permit shall forthwith be terminated and the house trailer or mobile home must be removed from the premises;

4. The application shall be submitted and processed in the same manner as are application for building permits. A fee in the sum set by the city in addition to other fees shall be charged and paid when the application is made;

5. If the construction of the home is not complete within eighteen (18) months and the applicant is not in violation of this section, for good cause shown, the city may extend the permit for a reasonable period of time, and a fee shall be charged therefor and paid when the extension of time is permitted.

D. Every parking space for a mobile home shall be provided with devices for anchoring the mobile home to prevent overturning or uplift. The owner of the parking space shall anchor or cause to be anchored all mobile homes located on the parking space. Where concrete platforms are provided for the parking of the units, anchorage may be by eyelets embedded in the concrete with adequate anchor plats or hooks, or other suitable means. The anchorage of all mobile homes shall be adequate to withstand wind force and uplift as required by accepted engineering practices depending on the size and weight of the mobile home. (Prior Code, Secs.4-39 to 4-42.2)

SECTION 5-703 Use of travel trailers as temporary housing following a disaster.

A. The owner of a residence may obtain a permit to occupy a travel trailer for a temporary period when an unforeseen hazard involving a vehicular accident, fire, or natural disaster has made a single-family residence unsafe for occupancy.

B . An application for a permit for temporary occupancy shall be made by the owner within six (6) months from the date of the unforeseen hazard on a form approved by

the City Manager, and shall include the following:

1. The name of the owner of the affected property, the street address of the affected property, the number of acres included in the affected property, and the current zoning of the affected property.

2. Three copies of a complete site plan illustrating the proposed location of the travel trailer, and showing the location thereof in relation to property boundaries and applicable set back lines.

3. Photographs of the travel trailer.

4. A statement affirming the owner's intention to rebuild the permanent residence on the affected property.

5. For owners of affected property seeking a permit as a result of the May 24, 2011 tornado to place a travel trailer on non-affected property, the address where the travel trailer will be placed and the name of the owner of such property.

6. Such other information as deemed necessary or appropriate by the City Manager.

C. Conditions.

1. The travel trailer must be placed on the property where construction is planned, and no portion therefore may be placed within ten (10) feet of a property boundary, beyond an applicable set back line, over a utility easement, or in the sight triangle of an intersection.

2. Permits for temporary occupancy may be issued only to the owner of the affected residence at the time of the unforeseen hazard. Only the owner of the affected residence and the owner's family may occupy a travel trailer or mobile home under a permit for temporary occupancy issued pursuant to this section. Provided, a permit may be obtained by an owner of a single-family residence rendered unsafe as a result of the May 24, 2011 tornado to place a travel trailer on unaffected property for a period not to exceed ninety (90) days from May 24, 2011 upon showing written consent of the owner of such unaffected property.

3. Permits for temporary occupancy are valid for up to twelve (12) months from the date of issuance. For good cause shown, the City Inspector may extend a permit for temporary occupancy for a period not to exceed six (6) months. An extension for more than six (6) months may be granted only upon approval of the City Council.

4. Only one permit for temporary occupancy is allowed for a property lying in a single-family zoning district, or on any tract of five (5) acres or less.

5. The travel trailer must be skirted where appropriate, and be in compliance with manufacturer safety requirements.

6. The travel trailer shall contain a kitchen area and restroom facility.

7. Where available, municipal refuse, electric, water and sewer service shall be provided and connected to the travel trailer, as appropriate, during the period of temporary occupancy. Where the property is serviced by a septic or other private refuse system, the travel trailer shall be connected to such private sewer system during the period of temporary occupancy.

8. Permits for temporary occupancy shall terminate upon the occurrence of any of the following:

(a) Three months having passed since the date of issuance and no building permit being issued to rebuild or restore the primary residence on the property; provided, for good cause shown the City Inspector may extend this period for an additional three months.
(b) The primary residence having been restored or rebuilt to a point where it can be occupied.
(c) Two (2) years having passed from the date of issuance of the temporary permit.

SECTION 5-704 PENALTY

Any violation of the city's mobile home regulations is punishable as provided in Section 1-108 of this code. Each day such violation continues shall be a separate offense.

CHAPTER 8

POWER GENERATION TOWERS AND WIND GENERATORS

Section 5-801	Purpose & Intent
Section 5-802	Definitions
Section 5-803	Wind Energy Conversion Systems Not Requiring a Zoning Permit
Section 5-804	General Requirements for all Wind Energy Conversion Systems
Section 5-805	Required Permit
Section 5-806	Pre-Application Meeting
Section 5-807	Application Requirements
Section 5-808	Location of Systems
Section 5-809	Structure Design and Construction
Section 5-810	Height and Clearances of Systems
Section 5-811	Appearance and Visibility of all Wind Energy Conversion Systems
Section 5-812	Security of Wind Energy Conversion Systems
Section 5-813	Signage
Section 5-814	Lot Size and Setbacks
Section 5-815	Maintenance & Inspections
Section 5-816	Liability Insurance
Section 5-817	Removal of Wind Energy Conversion Systems
Section 5-818	Variances
Section 5-819	Penalty

SECTION 5-801 PURPOSE & INTENT.

The purpose of this Article is to regulate the placement, construction, and modification of Mini Wind Energy Conversion Systems (Mini WECS) and Small Wind Energy Conversion Systems (SWECS) in The City of Piedmont. All other Wind Energy Conversion systems are prohibited. The regulations set forth herein have been formulated to facilitate economic opportunities for the local economy and to protect the health, safety, and general welfare of the public as these improvements are commissioned. The provisions of this Article will:

1. Establish a reasonable and efficient process for the review and approval of Mini WECS and SWECS;

2. Prescribe required distances for setbacks for Mini WECS and SWECS from buildings, property lines, and easements;

3. Institute minimum performance regulations for Mini WECS and SWECS;

4. Create standards for the removal of Mini WECS and SWECS and their appurtenant structures.

SECTION 5-802 DEFINITIONS.

For the purposes of this Ordinance, the defined words, terms, phrases, abbreviations, and their derivations shall have the meanings given in this section.

"Mini Wind Energy Conversion System" or **"Mini WECS"** means the system by which wind energy is converted to electricity using a wind turbine, tower, support system, blades, and associated control and conversion electronics which has a rated capacity less than ten (10) kW and a system height of not more than eighty (80) feet. For the purposes of this Ordinance, a roof-mounted structure shall be considered a Mini WECS if it meets the rated capacity and height requirements set forth in this Section. Only one (1) Mini Wind Energy Conversion System may be permitted per principle structure solely to serve that structure. Mini WECS shall be considered an accessory use in all Zoning Districts.

"Small Wind Energy Conversion System" or **"SWECS"** means the system by which wind energy is converted to electricity using a wind turbine, tower, support system, blades, and associated control and conversion electronics which has a rated capacity of less than, or equal to, one-hundred (100) kW and a system height of more than eighty (80) feet. Only one (1) Small Wind Energy Conversion System may be permitted per principle structure solely to serve that structure. SWECS shall be considered a Principally Permitted Use in all Agricultural, (A), and as a Conditional Use in all Residential, Commercial and Industrial zones.

"System" means Mini WECS and SWECS.

"Applicant" means the entity or person who submits to the City, pursuant to this Article, an application for the siting of any System.

"Financial Assurance" means an insurance performance bond or one irrevocable, unconditional letter of credit, either one of which must be obtained from a single financial institution licensed in the State of Oklahoma.

"Free Fall Area" means the area in the shape of a circle surrounding any System whose radius is the height of the structure plus ten percent (10%) of the height of the System or structure.

"Modification" means the addition, removal or change of any of the physical and visually discernable components or aspects of a System. A modification shall not include the replacement of any components of a System where the replacement is identical to the component being replaced or for any matters that involve the normal repair and maintenance of a System without addition, removal or discernable change.

"Operator" means the entity responsible for the day-to-day operation and maintenance of the System, including any third party subcontractors.

"Owner" means the entity or entities with an equity interest in the System, including their respective successors and assigns.

"Permit" means a Permit issued by the City of Piedmont for the installation or modification of a System, unless specifically noted otherwise in this Article.

"Professional Engineer" means a qualified individual who is licensed as a Registered Professional Engineer in the State of Oklahoma.

"State" means the State of Oklahoma.

"System Tower" or **"Tower"** means the support structure to which the nacelle and rotor are attached, free standing or guyed structure that supports a wind turbine generator.

"Tower Height" means the distance from the rotor blade at its highest point to the top surface of the System foundation.

SECTION 5-803 WIND ENERGY CONVERSION SYSTEMS NOT REQUIRING A ZONING PERMIT.

Mini WECS or SWECS structures may be established to serve an existing agricultural use on lots five (5) acres or greater in size. These structures may not exceed eighty (80) feet in total height and must be situated eighty-eight (88) feet from both all property lines and overhead utility easements to be exempt from the provisions set forth later in this Article. Although a Zoning Permit may not be required for Mini WECS or SWECS and appurtenant structures of this type, a Building Permit is required and must be applied for and approved prior to any site work.

A Conditional Use Permit shall be required for all other Mini WECS or SWECS applications.

A maximum of one (1) Mini WEC or SWEC shall be permitted per principal structure.

SECTION 5-804 GENERAL REQUIREMENTS FOR ALL WIND ENERGY CONVERSION SYSTEMS.

The design and construction of all Systems shall meet the following standards:

1. All applicants shall construct, operate, maintain, repair, provide for removal of, modify or restore the permitted system in strict compliance with all current applicable technical, safety and safety-related codes adopted by the City of Piedmont, the State of Oklahoma, or the United States. The codes referred to are codes that include, but are not limited to, construction, building, electrical, fire, safety, health, and land use codes. In the event of a conflict between or among any of the preceding the more stringent shall apply;

2. All applicants shall obtain, at their own expense, all permits and licenses required by applicable law, rule, regulation or code, and must maintain the same, in full force and effect, for as long as required by the City of Piedmont or any other governmental entity or agency having jurisdiction over the applicant;

3. All applicants shall notify the City of any intended modification of a System and shall apply to the City to modify the height, relocate or rebuild such structure;

4. All Systems shall conform to applicable industry standards of the American National Standards Institute (ANSI) and be approved by a wind certification program recognized by the American Wind Energy Association. All WECS that are over twenty-five (25) feet in height must be designed by a Registered Professional Engineer. The engineer must certify that the foundation and tower constructed for the System is within acceptable code and industry standards given local soil and climate conditions.

SECTION 5-805 REQUIRED PERMIT.

All applicants involving a new System, or an existing System that involves a new modification, are required to obtain the proper permit that is in accordance with the requirements of this Article. Agricultural installations described above are a Permitted Use. Conditional Use permits are required for all other Mini WECS or SWECS applications. All Systems that are considered Principally Permitted Uses shall be subject a Plot Plan Review by City Staff. If it is determined that the application meets the purpose and intent of this Article, the application shall be approved. If it is determined that the application does not meet the purpose and intent of this Article, the application shall be denied with the specific reasons detailed.

No System of any type shall be installed or constructed until the application is reviewed and approved by the City, and a permit has been issued. The City may at its discretion delegate or designate other official agencies to accept, review, analyze, evaluate and make recommendations with respect to the approval, or denial of proposed System. Any permit issued for a System shall not be assigned, transferred or conveyed without the express prior written notification to the City.

SECTION 5-806 PRE-APPLICATION MEETING.

Prior to the submittal of an application that does not involve a Mini WECS or SWECS structure exempt per Section 5-803, the applicant is required to contact the City and its designated representatives to schedule a pre-application meeting. The purpose of this meeting is to address potential issues, which will help expedite the review and permitting process. The pre-application meeting shall include a site visit, if there has not been a prior site visit for the proposed site. It shall also be determined at the pre-application meeting, the number of copies necessary for the applicant to submit a completed application. The applicant shall pay any and all costs that are associated with the preparation and attendance of the pre-application meeting.

SECTION 5-807 APPLICATION REQUIREMENTS.

All applications for Systems, or any modification of such facility, shall comply with the requirements set forth in this Section.

All applications shall be accompanied with a nonrefundable processing fee in an amount determined by Resolution of the City Council.

Applications not meeting the requirements stated herein or which are otherwise incomplete, may be rejected by the City. The applicant shall be required to perform the following actions:

- Sign the application with knowledge of the contents and representations made therein and attesting to the truth and completeness of the information. Any individual signing the application shall be an authorized individual of the applicant. The landowner, if different than the applicant, shall also sign the application.

- Submit the following statement in writing:

"The proposed Wind Energy Conversion System shall be maintained in a safe manner, and in compliance with all conditions of the Permit, without exception, unless specifically granted relief by the City in writing, as well as all applicable and permissible local codes, ordinances, and regulations, including any and all applicable City, State and Federal Laws, rules, and regulations."

All applications for the construction or installation of new Mini WECS or SWECS shall contain the information set forth in this Section. Where a certification is required, such certification shall bear the signature and seal of a Registered Professional Engineer. At the discretion of the City, any false or misleading statement in the application may subject the applicant to denial of the application without further consideration or opportunity for correction.

Applicants must submit all of the information required to assure that the installation or modification meet all City of Piedmont ordinances, rules and regulations which may require submissions to, hearings before, and approval of the Piedmont Planning Commission, Piedmont City Council or Piedmont Board of Adjustment.

Information that is also relevant to the following items must also be specifically supplied:

1. The location of all above-ground utility lines within a radius equal to two (2) times the height of the proposed WECS;

2. The location of all underground utility lines associated with the project site;

3. Dimensional representation of the structural components of the tower construction including the base and footings;

4. Manufacturer's specifications and installation and operation instructions or specific design information;

5. Certification by a registered professional engineer that the tower design; including all footers, is sufficient to meet all City, County, State, and Federal requirements;

6. Information relevant to any existing, or anticipated, access easements or utility easements;

7. Acknowledgement that no appurtenances other than those associated with the wind turbine operations may be connected to any wind tower except with express, written permission by the Board of Adjustment;

8. Information as deemed necessary to determine that the installation or modification will not interfere with the peaceful enjoyment of property owned by others. Interference shall include, but not be limited to emission of noise that can be heard beyond the property line, reflections or shadowing.

SECTION 5-808 LOCATION OF SYSTEMS.

An application for a System may be approved in any zoning district of the City of Piedmont, provided that City officials find that the proposed site does not interfere with the health, safety and welfare of the City and its inhabitants and will not have a harmful effect on the nature and character of the community and neighborhood.

Notwithstanding that a potential application may require approval for a Conditional Use, the City may disapprove an application or revoke a permit for any of the following reasons:

1. Conflict with safety and safety-related codes and requirements;

2. Conflict with the historic nature or character of a neighborhood or historical district;

3. Conflict with a purpose of an existing, specific zoning or land use designation;

4. The placement and location of Wind Energy Conversion System which would create an unacceptable risk, or the reasonable probability of such, to residents, the public, employees and agents of the City, or employees of the service provider or other service providers;

5. Conflicts with the provisions of this ordinance;

6. Potential for creating or creating a nuisance;

7. Interference with the peaceful enjoyment of property owned by others.

SECTION 5-809 STRUCTURE DESIGN AND CONSTRUCTION.

The design and construction of all Systems shall meet the following standards:

1. The foundation and attachments shall meet all City, County, State and Federal structural requirements for loads, including wind and ice loads;

2. Systems, and any and all accessory or associated facilities shall maximize the use of building materials, colors and textures designed to blend with the structure to which it may be affixed and/or to harmonize with the natural surroundings.

SECTION 5-810 HEIGHT AND CLEARANCES OF SYSTEMS.

No Mini WECS or SWECS System Tower constructed after the effective date of this Ordinance, including allowing for all attachments, shall exceed that height which shall permit operation without required artificial lighting of any kind in accordance with City, County, State, and/or any Federal statute, law, ordinance, code, rule or regulation.

The minimum distance between the ground or roof and any protruding blade(s) utilized on a Mini WECS or SWECS shall be fifteen (15) feet, as measured at the lowest point of the arc of the blades. This minimum distance shall be increased as necessary to provide for vehicle clearance in locations where over-sized vehicles might travel.

SECTION 5-811 APPEARANCE AND VISIBILITY OF ALL WIND ENERGY CONVERSION SYSTEMS.

All Systems and their appurtenant structures shall be designed to minimize the adverse visual impacts of its surroundings. Specifically:

1. Systems shall not be artificially lighted or marked, except as required by law.

2. All Systems and supporting structures must consist of a nonreflective, unobtrusive color usually gray or white. No advertising signage shall be permitted; however, the manufacturer's identification with ratings is allowed.

3. If lighting is required, the Applicant shall provide a detailed plan for sufficient lighting of as unobtrusive and inoffensive an effect as is permissible under State and Federal regulations.

SECTION 5-812 SECURITY OF WIND ENERGY CONVERSION SYSTEM.

All Systems and their appurtenant structures shall be located, fenced or otherwise secured in a manner that prevents unauthorized access. Specifically, all Systems and other supporting structures, including guy wires, shall be made inaccessible to individuals and constructed or shielded in such a manner that they cannot be climbed or collided with.

SECTION 5-813 SIGNAGE.

All Systems and their appurtenant structures shall contain a sign no larger than four (4) square feet in order to provide the name(s) of the owner(s) and operator(s) of the WECS as well as emergency phone number(s). This sign shall be visible from the access point of the site and shall not be lighted, unless lighting is required by applicable law, rule or regulation. A four (4) square-foot warning sign concerning voltage must also be placed at the base of all pad-mounted transformers and substations in a conspicuous location. No other signage, including advertising, shall be permitted.

SECTION 5-814 LOT SIZE SETBACKS.

All proposed Mini WECS or SWECS Systems shall be set back from abutting parcels, recorded rights-of-way and existing or anticipated access or utility easements by the greater of the following distances: A distance equal to the height of the proposed System's structure plus ten percent (10%) of the height of the supporting structure, or the existing setback requirement of the underlying zoning district, whichever is greater. Any accessory structure shall be located so as to comply with the applicable minimum setback requirements for the property on which it is situated.

A minimum lot size of one (1) acre is required for all Mini WECS or SWECS.

A transfer of ownership of an adjacent lot, held in combination and under common ownership at the time of Mini WECS or SWECS System installation, shall include a grant of easement equal to the required off-site setback encroachment; approved by the City Manager or his designee; and recorded with the Canadian County Clerk's Office for parcels in Canadian County and with the Kingfisher County Clerk's Office for parcels in Kingfisher County to run with the deed.

SECTION 5-815 MAINTENANCE & INSPECTIONS.

The Piedmont Code Enforcement Officer shall be permitted upon the premises where any System is located for inspection. The owners or operators of a System that does not meet local, State, or Federal codes and regulations shall be notified in writing. Once notified in writing, the owner or operator of a System will be required to cure the violation or make any necessary repairs or alterations within thirty (30) days after receiving notice or within a longer period of time mutually acceptable to both parties. During this time period, the owner or operator of a System may retain a licensed third party professional engineer familiar with Systems to prepare and submit to the Piedmont Code Enforcement Officer a written report which addresses the repairs or alterations required, and which suggests alternate methods for addressing the concerns or provides evidence that said repairs or alterations are unnecessary. The City Manager or his designee will consider any such written report and determine whether the repairs or alterations should be made as originally requested, or as suggested in the written report.

SECTION 5-816 LIABILITY INSURANCE.

The owner or operator of any System will provide proof of liability coverage and shall maintain a current general liability policy covering bodily injury and property damage with dollar amount limits per occurrence, in the aggregate, and a deductible, which may from time to time be determined by Resolution of the City Council.

SECTION 5-817 REMOVAL OF WIND ENERGY CONVERSION SYSTEMS.

The holder of a permit for a System, or its successors or assigns, shall immediately dismantle and remove such facilities, and all associated structures, from the site and restore the site to as close to its original condition as is possible, if at any time any of the following apply:

1. The system has been abandoned for a period of one hundred-eighty (180) days in any three hundred-sixty five (365) day period. For properties involving foreclosure, vacant residential structures, or for other unusual or extreme circumstances, a waiver may be requested to extend this time period. All waiver requests of this specific type must be submitted in writing to the City Manager or his designee and may be issued only if the waiver is determined to be necessary and if the requested waiver does not adversely affect the other requirements of this Article;

2. The system falls into such a state of disrepair that it creates a health or safety hazard;

3. The system has been located, constructed, or modified without first obtaining, or in a manner not authorized by, the required permit, or any other necessary authorization;

4. The City Manager or his designee determines that the health, safety, and welfare interests of the City warrant and require the removal of the Wind Energy Conversion System.

SECTION 5-818 VARIANCES.

Any requirement of this Article may receive a variance by the Board of Adjustments if it is determined that such action is warranted given the nature of an individual project and such action will serve to preserve the purpose and intent of these regulations.

SECTION 5-819 PENALTY.

Any violation of this article shall constitute an offense and be punishable by a fine not to exceed the general penalty found in section 1-108 of the Piedmont Code of Ordinances.

(This page intentionally left blank)

PART 6

COURT

CHAPTER 1

COURT PROCEDURE

Section 6-101	Definitions.
Section 6-102	Purpose.
Section 6-103	Jurisdiction.
Section 6-104	Change of venue; disqualification of judge.
Section 6-105	Chief of police as principal officer of court.
Section 6-106	Clerk of court; duties.
Section 6-107	City attorney; powers and duties.
Section 6-108	Bond.
Section 6-109	Authority of judge to prescribe rules.
Section 6-110	Ordinance violations bureau created; payment of fines, fines in lieu of appearance.
Section 6-111	Designation of fines, ordinance violations bureau.
Section 6-112	Prosecutions; filing of complaint, defects raised only prior to trial.
Section 6-113	Ordinance violations; procedures for issuing citations; custody, arrest.
Section 6-114	Traffic bail bond act.
Section 6-115	Issuance of summons; failure to appear.
Section 6-116	Failure to appear, penalty, bond forfeiture, bench warrant.
Section 6-117	Complainant, witnesses, failure to appear.
Section 6-118	Issuance of warrant.
Section 6-119	Procedures for bail or bond, bond schedule.
Section 6-120	Arraignment.
Section 6-121	Postponement of trial.
Section 6-122	Defendant's presence required at trial.
Section 6-123	Procedure for trials not within scope of chapter.
Section 6-124	Judgment.
Section 6-125	Judgment of imprisonment.
Section 6-126	Suspension or deferment of judgment, powers.
Section 6-127	Payment of costs by defendant.
Section 6-128	Witness fees.
Section 6-129	Enforcement of fines and costs, imprisonment, work and community service.
Section 6-130	Same offense punishable by different sections of the code.
Section 6-131	Contempt of court.

Section 6-132 Penalty assessments.
Section 6-133 Fines, recoverable by civil action; failure to pay separate offense, imprisonment
Section 6-134 Payment of jail costs by inmates
Section 6-135 Bond/security filing fee

CHAPTER 2

JUDGE

Section 6-201 Judge; created; qualifications.
Section 6-202 Term of office of judge.
Section 6-203 Appointment of judge, alternate judge.
Section 6-204 Acting judge.
Section 6-205 Compensation.
Section 6-206 Removal of judge from office.
Section 6-207 Vacancy.

CHAPTER 3

JURY TRIALS

Section 6-301 Right to trial by jury, waiver.
Section 6-302 Selection of jurors.
Section 6-303 Summons of jurors; form; service.
Section 6-304 Composition of jury; duty of jurors.
Section 6-305 Determination of questions of law.
Section 6-306 Verdict
Section 6-307 Juror's fees.
Section 6-308 Cost bond for jury trial.
Section 6-309 Misconduct of jurors generally.
Section 6-310 Responsibility of officer in charge of jury.

CHAPTER 4

PROCEEDING AGAINST CORPORATIONS

Section 6-401 Summons, issuance to corporations.
Section 6-402 Form of corporation summons.
Section 6-403 Service of summons.
Section 6-404 Trial.
Section 6-405 Collection of fines

CHAPTER 5

JUVENILE OFFENDERS

Section 6-501	Jurisdiction.
Section 6-502	Custody and detention.
Section 6-503	Penalties, sentencing alternatives, costs.
Section 6-504	Confidentiality of records.
Section 6-505	Use of funds from juvenile offender prosecution.
Section 6-506	Failure of parent/guardian/custodian of juvenile to honor promise to appear.
Section 6-507	Juvenile proceedings; privacy.
Section 6-508	Citations issued to juveniles.
Section 6-509	Juveniles jurisdiction of the municipal court for traffic offenses.

(This page intentionally left blank)

CHAPTER 1

COURT PROCEDURE

Section	6-101	Definitions.
Section	6-102	Purpose.
Section	6-103	Jurisdiction.
Section	6-104	Change of venue; disqualification of judge.
Section	6-105	Chief of police as principal officer of court.
Section	6-106	Clerk of court; duties.
Section	6-107	City attorney; powers and duties.
Section	6-108	Bond.
Section	6-109	Authority of judge to prescribe rules.
Section	6-110	Ordinance violations bureau created; payment of fines, fines in lieu of appearance.
Section	6-111	Designation of fines, ordinance violations bureau.
Section	6-112	Prosecutions; filing of complaint, defects raised only prior to trial.
Section	6-113	Ordinance violations, procedures for issuing citation; custody, arrest.
Section	6-114	Traffic bail bond act.
Section	6-115	Issuance of summons; failure to appear.
Section	6-116	Failure to appear, penalty, bond forfeiture, bench warrant.
Section	6-117	Complainant, witnesses, failure to appear.
Section	6-118	Issuance of warrant.
Section	6-119	Procedures for bail or bond, bond schedule.
Section	6-120	Arraignment.
Section	6-121	Postponement of trial.
Section	6-122	Defendant's presence required at trial.
Section	6-123	Procedure for trials not within scope of chapter.
Section	6-124	Judgment.
Section	6-125	Judgment of imprisonment.
Section	6-126	Suspension or deferment of judgment, powers.
Section	6-127	Payment of costs by defendant.
Section	6-128	Witness fees.
Section	6-129	Enforcement of fines and costs, imprisonment, work and community service.
Section	6-130	Same offense punishable by different sections of the code.
Section	6-131	Contempt of court.
Section	6-132	Penalty assessments.
Section	6-133	Fines, recoverable by civil action; failure to pay separate offense, imprisonment.
Section	6-134	Payment of jail costs by inmates.
Section	6-135	Bond/security filing fee.

SECTION 6-101 DEFINITIONS

As used in this chapter:

1. "Chief of police" means the peace officer in charge of the police force of the City;
2. "Clerk" means the Court Clerk as appointed by the city manager, including any deputy or member of the office staff of the Clerk while performing duties of the Clerk's Office;

3. "Court" means the municipal criminal court of this City;

4. "Judge" means the judge of the municipal criminal court, including any acting judge or alternate judge thereof as provided for by the statutes of this state and this chapter; and

5. "This judicial district" means the district court judicial district of the state wherein the government of this City is situated.

State Law Reference: Municipal courts generally, 11 O.S. Secs. 27-101 et seq.

SECTION 6-102 PURPOSE.

This chapter shall govern the organization and operation of the municipal criminal court of the City, as put into operation by resolution duly passed and filed in accordance with law, as authorized by State statutes. To the extent of conflict between any provisions of this chapter and the provisions of any other ordinance of this City, the provisions of this chapter shall control.

SECTION 6-103 JURISDICTION.

The court shall exercise original jurisdiction to hear and determine all prosecutions wherein a violation of any ordinance of this City is charged, including any such prosecutions transferred to the court in accordance with applicable law.

SECTION 6-104 CHANGE OF VENUE; DISQUALIFICATION OF JUDGE.

In prosecutions before the court, no change of venue shall be allowed. The judge before whom the case is pending may certify his disqualification or he may be disqualified from sitting under the terms, conditions and procedure provided by law for courts of record. If a judge is disqualified, the matter shall be heard by an acting judge, appointed as provided in this chapter.

SECTION 6-105 CHIEF OF POLICE AS PRINCIPAL OFFICER OF COURT.

All writs or processes of the court shall be directed, in his official title, to the Chief of police, who shall be the principal officer of the Court.

SECTION 6-106 CLERK OF COURT; DUTIES.

A. The clerk or a deputy designated by him shall be the Clerk of the Court.

B. The Clerk shall:

1. Assist the judge in recording the proceedings of the court and in preparing writs, processes and other papers;

2. Administer oaths required in proceedings before the Court;

3. Enter all pleadings, processes and proceedings in the dockets of the courts;

4. Perform such other clerical duties relating to the proceedings of the Court as

the judge shall direct; and,

5. Receive any receipt for forfeitures, fees, deposits and sums of money payable to the court and as may be established by the court of the City Council.

C. The Clerk shall pay to the Clerk of the City all money so received by him, except such special deposits of fees as shall be received to be disbursed by him for special purposes. All money paid to the Clerk shall be placed in the general fund of the City, or in such other fund as the Council may direct. (Prior Code, Sec. 12-14).

SECTION 6-107 CITY ATTORNEY; POWERS AND DUTIES.

The City Attorney, or his duly designated assistant, may be the prosecuting officer of the Court. He may prosecute, in his discretion, all alleged violations of the ordinances of the City. He shall be authorized, in his discretion, to prosecute and resist appeals, proceedings in error, and review from this Court to any other courts of the State, and to represent this City in all proceedings arising out of matters of this Court. (Prior code, Sec. 12-15).

SECTION 6-108 BOND.

The Clerk of the Court shall give bond in such sum as set by the Council, in the form provided by State law. When executed the bond shall be submitted to the Council for approval. When approved it shall be filed with the Clerk and retained in the municipal archives.

SECTION 6-109 AUTHORITY OF JUDGE TO PRESCRIBE RULES.

The Judge may prescribe rules consistent with the laws of the State and with the ordinances of this City for the proper conduct of the business of the Court. (Prior Code, Sec 12-16)

SECTION 6-110 ORDINANCE VIOLATIONS BUREAU CREATED; PAYMENT OF FINES; FINES IN LIEU OF APPEARANCE.

A. An Ordinance Violations Bureau is established as a division of the Office of the Clerk of the Court, to be administered by the Clerk or by subordinates designated for that purpose. Persons who are cited for violation of one of the ordinances of this City, other than a second offense within a twelve-month period, a driver's license offense, or an offense punishable by more than Five Hundred Dollars ($500.00) or imprisonment may elect to pay a fine in the Ordinance Violations Bureau according to a schedule of fines prescribed from time to time by the Judge with approval of the City Council. The payment shall constitute a final determination of the cause against the defendant.

B. The Court may adopt rules to carry into effect this section. If a defendant who has elected to pay a fine under this section fails to do so, prosecution shall proceed under the provisions of this Chapter.

SECTION 6-111 DESIGNATION OF FINES, ORDINANCE VIOLATIONS BUREAU.

The Judge is authorized to establish a minimum fine schedule to become effective upon approval by resolution of the City Council. The minimum fine schedule when established shall provide for a minimum amount which a person may pay upon a plea of guilty or nolo contendere to

the listed offenses. The minimum fine schedule shall include fines, court costs and any assessments set by State law within the specified amount. Upon a plea of guilty or nolo contendere and payment of the required minimum fine prior to the date scheduled for Court appearance, no further Court appearance shall be required. The Judge shall authorize the Court Clerk to accept pleas of guilty and nolo contendere where the amount of the minimum fine is paid at the time of such plea and prior to the scheduled Court appearance date.

SECTION 6-112 PROSECUTIONS; FILING OF COMPLAINT; FEES; DEFECTS RAISED PRIOR TO TRIAL.

A. All prosecutions for violations of ordinances of this City shall be styled "The City of Piedmont, Oklahoma, vs. (naming defendant or defendants)." Except as provided hereinafter, prosecutions shall be initiated by the filing of a written complaint, subscribed and verified by the person making the complaint, and setting forth concisely the offense charged.

B. If the arrested resident is not released by being permitted to sign a citation as provided in this subsection, he shall be admitted to bail either before or after arraignment, or shall be released on personal recognizance.

C. If a nonresident of this City is arrested by a law enforcement officer for a violation of any ordinance for which Section 6-114 of this code does not apply, the defendant shall be eligible to be admitted to bail either before or after arraignment.

D. If the alleged offense be a violation of an ordinance restricting or regulating the parking of vehicles, including any regulations issued under such an ordinance, and the operator be not present, the police officer shall place on the vehicle at a place reasonably likely to come to the notice of the operator, a citation conforming substantially to that prescribed in this section, with such variation as the circumstances require, the operator of this vehicle shall be under the same obligation to respond to the citation as if it had been issued to him personally under Subsection A of this section.

E. A complaint may be amended in matter of substance or form at any time before the defendant pleads, without leave, and may be amended after plea or order of the Court where the same can be done without material prejudice to the rights of the defendant. No amendment shall cause any delay of the trial, unless good cause is shown by affidavit. (Prior Code, Secs. 12-16, 12-19, as amended)

SECTION 6-113 ORDINANCE VIOLATIONS; PROCEDURES FOR ISSUING CITATION; CUSTODY; ARREST.

A. If a resident of this City is arrested by a law enforcement officer for the violation of any traffic ordinance for which other provisions of this chapter do not apply, or is arrested for the violation of a nontraffic ordinance, the officer shall immediately release the person if the person acknowledges receipt of a citation by signing it. However, the arresting officer need not release the person if it reasonably appears to the officer that the person may cause injury to himself or others or damage property, if released that the person will not appear in response to the citation, or the person is arrested for an offense against a person or property. If the person fails to appear in response to the citation, a warrant shall be issued for his arrest and his appearance shall be compelled.

B. If the arrested resident is not released by being permitted to sign a citation as provided in this subsection, he shall be admitted to bail either before or after arraignment, or shall be released on personal recognizance.

C. If a nonresident of this city is arrested by a law enforcement officer for a violation of any ordinance for which Section 6-114 of this code does not apply, the defendant shall be eligible to be admitted to bail either before or after arraignment.

D. If the alleged offense be a violation of an ordinance restricting or regulating the parking of vehicles, including any regulations issued under such an ordinance, and the operator be not present, the police officer shall place on the vehicle, at a place reasonably likely to come to the notice of the operator, a citation conforming substantially to that prescribed in this section, with such variation as the circumstances require, the operator of this vehicle shall be under the same obligation to respond to the citation as if it had been issued to him personally under Subsection A of this section.

SECTION 6-114 TRAFFIC BAIL BOND ACT

A. In addition to other provisions of law for posting bail, any person, whether a resident of this state or a nonresident, who is arrested by a law enforcement officer solely for a misdemeanor violation of a state traffic law or municipal traffic ordinance shall be released by the arresting officer upon personal recognizance if:

1. The arrested person has been issued a valid license to operate a motor vehicle by this state, another state jurisdiction within the United States which is a party to the Nonresident Violator Compact, or any party jurisdiction of the Nonresident Violator Compact;

2. The arresting officer is satisfied as to the identity of the arrested person;

3. The arrested person signs a written promise to appear as provided for on the citation; and

4. The violation does not constitute:

a. A felony;

b. Negligent homicide;

c. Driving or being in actual physical control of a motor vehicle while impaired or under the influence of alcohol or other intoxicating substances:

d. Eluding or attempting to elude a law enforcement officer;

e. Operating a motor vehicle without having been issued a valid driver's license, or while the license is under suspension, revocation, denial or cancellation;

f. An arrest based upon an outstanding warrant;

g. A traffic violation coupled with any offense stated in subparagraphs a through f of this paragraph;

h. An overweight violation, or the violation of a special permit exceeding the authorized permit weight; or

i. A violation relating to the transportation of hazardous materials.

B. If the arrested person is eligible for release on personal recognizance as provided for in subsection A of this section, then the arresting officer shall:

1. Designate the traffic charge;

2. Record information from the arrested person's driver's license on the citation form, including the name, address, date of birth, personal description, type of driver's license, driver's license number, issuing state, and expiration date;

3. Record the motor vehicle make, model and tag information;

4. Record the arraignment date and time on the citation; and

5. Permit the arrested person to sign a written promise to appear as provided for in the citation.

The arresting officer shall then release the person upon personal recognizance based upon the signed promise to appear. The citation shall contain a written notice to the arrested person that release upon personal recognizance based upon a signed written promise to appear for arraignment is conditional and that failure to timely appear for arraignment shall result in the suspension of the arrested person's drivers license in this state, or in the nonresident's home state pursuant to the Nonresident Violator Compact.

C. Procedures for arraignment, continuances and scheduling, timely appearances, pleas of guilty or nolo contendere, posting bail, payment of fines and costs, issuance of arrest warrants, and requests for suspension of drivers license, shall be as required in state law, Sections 1115.1 through 1115.5 of Title 22 of the Oklahoma Statutes.

D. A defendant released upon personal recognizance may elect to enter a plea of guilty or nolo contendere to the violation charged at any time before he is required to appear for arraignment by indicating such plea on the copy of the citation furnished to him or on a legible copy thereof, together with the date of the plea and his signature. The defendant shall be responsible for assuring full payment of the fine and costs to the court clerk. The defendant shall not use currency for payment by mail. If the defendant has entered a plea of guilty or nolo contendere as provided for in this subsection, such plea shall be accepted by the court and the amount of the fine and costs shall be as prescribed by ordinance for the violation charged or as prescribed by the court.

E. If, pursuant to the provisions of subsection D of this section, the defendant does not timely elect to enter a plea of guilty or nolo contendere and fails to timely appear for arraignment, the court may issue a warrant for the arrest of the defendant and the municipal or district court clerk, within one hundred twenty (120) calendar days from the date the citation was issued by the arresting officer, shall notify the State Department of Public Safety that:

1. The defendant was issued a traffic citation and released upon personal recognizance after signing a written promise to appear for arraignment as provided for in the citation;

2. The defendant has failed to appear for arraignment without good cause shown;

3. The defendant has not posted bail, paid a fine, or made any other arrangement with the court to satisfy the citation; and

4. The citation has not been satisfied as provided by law.

The court clerk shall request the State Department of Public Safety to either suspend the defendant's driver's license to operate a motor vehicle in this state, or notify the defendant's home state and request suspension of the defendant's driver's license in accordance with the provisions of the Nonresident Violator Compact. Such notice and request shall be on a form approved or furnished by the State Department of Public Safety. The court clerk shall not process the notification and request provided for in this subsection if, with respect to such charges:

1. The defendant was arraigned, posted bail, paid a fine, was jailed, or otherwise settled the case;

2. The defendant was not released upon personal recognizance upon a signed written promise to appear as provided for in this section or if released, was not permitted to remain on such personal recognizance for arraignment;

3. The violation relates to parking or standing, an overweight violation, an overweight permit, or the transportation of hazardous materials; or

4. A period of one hundred twenty (120) calendar days or more has elapsed from the date the citation was issued by the arresting officer.

F. The court clerk shall maintain a record of each request for driver's license suspension submitted to the State Department of Public Safety pursuant to the provisions of this section. When the court or court clerk receives appropriate bail or payment of the fine and costs, settles the citation, makes other arrangements with the defendant, or otherwise closes the case, the court clerk shall furnish proof thereof to such defendant, if the defendant personally appears, or shall mail such proof by first class mail, postage prepaid, to the defendant at the address noted on the citation or at such other address as is furnished by the defendant. Additionally, the court or court clerk shall notify the home jurisdiction of the defendant as listed on the citation, if such jurisdiction is a member of the Nonresident Violator Compact, and shall in all other cases, notify the State Department of Public Safety of the resolution of the case. The form of proof and the procedures for notification shall be approved by the State Department of Public Safety. Provided however, the court or court clerk's failure to furnish such proof or notice in the manner provided for in this subsection shall in no event create any civil liability upon the court, the court clerk, the state or any political subdivision thereof, or any state department or agency or any employee thereof but duplicate proof shall be furnished to the person entitled thereto upon request. (Prior Code, Sec. 12-20, as amended)

SECTION 6-115 ISSUANCE OF SUMMONS; FAILURE TO APPEAR.

A. Upon the filing of a complaint charging violation of an ordinance, the judge, unless he determines to issue a warrant of arrest, or unless the defendant previously has been issued a citation or has been arrested and has given bond for appearance, shall issue a summons, naming the person charged, specifying his address or place of residence, if known, stating the offense with

which he is charged and giving him notice to answer the charge in the court on a day certain, containing a provision for the official return of the summons, and including such other pertinent information as may be necessary.

B. The summons shall be served by delivering a copy to the defendant personally or by certified mail. If he fails to appear and to answer the summons within the prescribed period, a warrant shall be issued for his arrest, as provided by this chapter.

C. Any person who has been duly served with a summons or traffic citation and who has signed a written promise to appear in court as directed in the summons or the citation or as subsequently directed by the court, and who fails to appear pursuant to his written promise or as directed by the court shall be deemed guilty of an offense, which shall be punishable as provided in Section 1-108 of this code. (Prior Code, Sec. 12-21, 12-42)

SECTION 6-116 FAILURE TO APPEAR, PENALTY, BOND FORFEITURE, BENCH WARRANT.

A. Any person charged with an offense against the ordinances of the city shall appear personally in court on the time directed on the citation as required by ordinance or as directed by the judge. The failure to appear as required herein shall constitute a separate offense and upon conviction, shall be punished as provided in Section 1-108 of this code.

B. If, without sufficient excuse, a defendant fails to appear according to the terms or conditions of his bond, either for hearing, arraignment, trial or judgment, or upon any other occasion when his presence in court or before the judge may be lawfully required or ordered, the judge may direct that fact to be entered upon the court minutes, thereby declaring the bond to be forfeited. The judge may also order a bench warrant to be issued for the defendant as provided in this chapter.

C. The judge, without advancing court costs, may also cause the forfeiture to be certified to the district court of the county, where it shall be entered upon the judgment docket and shall have the full force and effect of a district court judgment. At such time as the forfeiture is entered upon the district court judgment docket, the district court clerk shall proceed in accordance with the provisions of Sections 1330, 1332, 1333 and 1335 of Title 5 of the Oklahoma Statutes, and a surety shall have all remedies available under the provisions of Sections 1108 of Title 22 of the Oklahoma Statutes and Sections 1301 through 1340 of Title 5 of the Oklahoma Statutes.

D. Court costs shall be collectible from the proceeds of the bond. (New)

State Law Reference: Similar provisions, 11 O.S. Sec. 27-118.

SECTION 6-117 COMPLAINANT, WITNESSES, FAILURE TO APPEAR.

No person, having signed a complaint in the municipal court of the city alleging the violation of an ordinance or any other person in response to an order of the court, shall fail, refuse or neglect to appear for the purpose of testifying as a witness at the trial of the case, after having been notified of the time, date and place at which the case is set for trial. (New)

SECTION 6-118 ISSUANCE OF WARRANT.

A. Except as otherwise provided by city ordinance, upon the filing of a complaint approved by endorsement by the city attorney or by the judge, there shall be issued a warrant of arrest, in substantially the following form:

The City of Piedmont, Oklahoma to the police chief of the City of Piedmont, Oklahoma. Complaint upon oath this day has been made by (naming complainant) that the offense of (naming the offense in general terms) has been committed and accusing (name of defendant) thereof, you are commanded therefore forthwith to arrest the above named (name of defendant) and bring (insert him, her or them, as appropriate) before me, at (naming the place).

Witness my hand this ___ day of _____, 1 ____.

_____
Judge of the Municipal
Criminal Court of
Piedmont, Oklahoma

B. It is the duty of the police chief personally, or through a duly constituted member of the city police force or through any other person lawfully authorized so to act, to execute the warrant as promptly as possible. (Prior Code, Sec. 12-22)

SECTION 6-119 PROCEDURES FOR BAIL OR BOND, BOND SCHEDULE.

A. Upon arrest, or upon appearance without arrest in response to citation or summons, or at any time before trial, before or after arraignment, the defendant may be eligible to be released upon giving bail for his appearance in an amount and upon conditions fixed by this chapter or the judge, who shall prescribe appropriate rules of court for the receipt of bail and release of the defendant. In case of arrests made at night or under other conditions of emergency or when the judge is not available, the rules shall authorize the chief of police, or his designated representative, to accept a temporary cash bond of not less than Ten Dollars ($10.00) nor more than the maximum monetary penalty provided by ordinance for the offense charged. The judge or police chief is authorized, subject to conditions as may be prescribed by the judge, to release a resident of the municipality on personal recognizance.

B. The city's bail bond schedule setting forth specific offenses and bail bond amounts and procedures therefor, as amended from time to time, is hereby adopted and incorporated herein by reference. (Prior Code, Sec. 12-23)

State Law Reference: Acceptable methods of bail, 11 O.S. Sec. 27-117 (cash, guaranteed arrest bond certificate).

SECTION 6-120 ARRAIGNMENT.

Upon making his appearance before the court, the defendant shall be arraigned. The judge, or the city attorney, shall read the complaint to the defendant, inform him of his legal rights, including the right of trial by jury, if available, and of the consequences of conviction, and ask him whether he pleads guilty or not guilty. If the defendant pleads guilty, the court may proceed to judgment and sentence or may continue the matter for subsequent disposition. If the plea is not

guilty, and the case is not for jury trial, the Court may proceed to try the case, or may set it for hearing at a later date.

SECTION 6-121 POSTPONEMENT OF TRIAL.

Before trial commences either party, upon good cause shown, may obtain a reasonable postponement thereof.

SECTION 6-122 DEFENDANT'S PRESENCE REQUIRED AT TRIAL.

The defendant must be present in person at the trial of his case in Court.

SECTION 6-123 PROCEDURE FOR TRIALS NOT WITHIN SCOPE OF CHARTER.

In all trials as to matters not covered in this chapter, by the statutes relating to municipal criminal courts, or by rules duly promulgated by the State Supreme Court, the procedure applicable in trials of misdemeanors in the district courts shall apply to the extent that they can be made effective.

SECTION 6-124 JUDGMENT.

At the close of trial, judgment must be rendered without undue delay by the Judge, who shall cause it to be entered in his docket:

1. If judgment is of acquittal, and the defendant is not to be detained for any other legal cause, he must be discharged at once;

2. If the defendant pleads guilty or is convicted after trial, the Court must render judgment thereon, fixing the penalty within the limits prescribed by the applicable ordinance and imposing sentence accordingly; and,

3. A judgment that the defendant pay a fine may direct also that he be imprisoned until the fine is satisfied, as provided in Section 6-129 of this code.

SECTION 6-125 JUDGMENT OF IMPRISONMENT.

If, after conviction, judgment of imprisonment is entered, a copy thereof, certified by the Clerk, shall be delivered to the Chief of Police, the Sheriff of the County, or other appropriate officer. Such copy shall be sufficient warrant for execution of the sentence.

SECTION 6-126 PROBATION.

The Judge of the Municipal Court may, in his or her discretion, modify, reduce, suspend, defer, continue, or delay sentencing and judgment for a period not to exceed six (6) months from the date of the sentence, under the terms and conditions as the Judge may

specify. A fee not to exceed Five Hundred Dollars ($500.00) may be imposed as an administrative fee to defer the costs of administering the defendants probation. Said administrative fee may be in addition to the deferral fee authorized by law.

SECTION 6-127 PAYMENT OF COSTS BY DEFENDANT.

If judgment of conviction is entered, the Court Clerk shall tax the costs to the defendant in the sum of Thirty Dollars ($30.00), or the maximum sum permitted by State law, whichever is greater, plus the fees and mileage of jurors and witnesses, all of which the defendant shall pay, in addition to any fine that may be imposed.

SECTION 6-128 WITNESS FEES.

A. Witnesses in any proceeding in the Court, other than police or peace officers who shall be employed by the City, shall be entitled to a witness fee as established by the City Council by motion or resolution per each day of attendance, plus mileage per mile actually and necessarily traveled in going to and return from the place of attendance, if the residence is more than ten (10) miles distance from the place of trial. No witness, however, shall receive fees or mileage in more than one case for the same period of time, or for the same travel. A defendant seeking to subpoena witnesses must deposit with the Court Clerk a sum sufficient to cover fees and mileage for one day of attendance of each witness to be summoned, but such deposit shall not be required from any indigent defendant who files an affidavit setting forth:

1. The names of no more witnesses than the Municipal Judge for the City shall determine to be just, necessary, and reasonable for the proper defense of such indigent's case;

2. That the defendant by reason of his poverty is unable to provide the fees and mileage allowed by law;

3. That the testimony of such witness is material; and,

4. That the attendance at the trial is necessary to his proper defense.

B. In any case where an indigent defendant has properly filled out and filed with the City an affidavit setting forth the above-mentioned information, then the fees for such witnesses shall be paid for by the City.

SECTION 6-129 ENFORCEMENT OF FINES AND COSTS, IMPRISONMENT, WORK, AND COMMUNICATION SERVICE.

A. If a defendant who is financially able refuses or neglects to pay a fine, or costs, or both, payment may be enforced by imprisonment until the same shall be satisfied at the rate of Five Dollars ($5.00) per day.

B. If the defendant is without means to pay the fine or costs, the Municipal Judge may direct the total amount due to be entered upon the court minutes and to be certified to the district court where it shall be entered upon the district court docket and shall have the full force and effect of a district court judgment. Thereupon the same remedies shall be available for the enforcement as are available to any other judgment creditor.

C. All prisoners confined to jail on conviction or on plea of guilty may be compelled, if their health permits, to work on community projects, the public streets, avenues or ways, public buildings, or other public premises or property. For each day of such work the prisoner or defendant shall be credited for two (2) days of imprisonment toward any fine, costs, or witness or juror fees, or mileage until the same are satisfied.

D. The City shall direct where the work shall be performed. The appropriate officer shall oversee the work. If a guard is necessary, the Chief of Police shall make provision therefor.

State Law Reference: Similar provisions, 11 O.S. §27-122; Community service, powers to direct, liability of city limited, 57 O.S. §§227, 288.

SECTION 6-130 SAME OFFENSE PUNISHABLE BY DIFFERENT SECTIONS OF THE CODE.

In all cases where the same offense is made punishable or is created by different sections of this code, the City Attorney may elect under which to proceed, but not more than one recovery shall be had against the same person for the same offense.

SECTION 6-131 CONTEMPT OF COURT.

Obedience to the orders, rules, and judgments made by the Court may be enforced by the Judge, who may fine or imprison for contempt committed as to him while holding Court, or committed against process issued by him, in the same manner and to the same extent as the district courts of this State.

SECTION 6-132 PENALTY ASSESSMENTS.

A. Any person:

1. Convicted of an offense punishable by a fine of Ten Dollars ($10.00) or more, or by imprisonment, excluding parking and standing violations; or,

2. Forfeiting bond when charged with such an offense under paragraph one hereon,

shall pay a sum set by State law as a separate penalty assessment for law enforcement training, fingerprinting fee, and forensic science improvement fee, which shall be in addition to and not in substitution for any and all fines and penalties and costs otherwise provided for such offense. The court shall provide for separate bail for the assessments; however, a defendant admitted to bail on an undertaking by a surety may include the amount of the assessment in the undertaking.

B. Upon conviction of bond forfeiture the court shall collect the assessment and deposit the monies for payment as required by state law.

C. The City shall deposit with the penalty assessment funds as required by law. The Court Clerk shall also furnish to the State reports required on the funds collected and penalty assessments imposed

D. For the purpose of this section, "conviction" means any final adjudication of guilt, whether pursuant to a plea of guilty or nolo contendere, or otherwise, and any deferred or suspended sentence or judgment.

SECTION 6-133 FINES RECOVERABLE BY CIVIL ACTION; FAILURE TO PAY SEPARATE OFFENSE, IMPRISONMENT.

A. All fines shall be recoverable by civil action before any court of competent jurisdiction in addition to any other method provided by law.

B. The failure to pay a fine levied pursuant to this code shall constitute a separate offense against the City, subject to a fine as provided in Section 1-108 of this code.

C. If a fine is not paid by the defendant, the fine may be collected by committing the defendant to the City jail, where he shall remain until his fine and any costs assessed against him are discharged, either by payment or by confinement in jail, or by working in accordance with other provisions of this code or State law.

SECTION 6-134 PAYMENT OF JAIL COSTS BY INMATES.

A. The Municipal Attorney shall ask the Court to require a person confined for any offense in the City jail, or other jail for which the City pays a fee for incarceration, to pay the City the costs of incarceration, both before and after conviction, upon conviction, or upon receiving a deferred or continued sentence. Costs of incarceration shall include booking, receiving, and processing out, housing, food, clothing, medical care, dental care, and psychiatric services. The costs of incarceration shall be an amount equal to the costs of such services as determined by the Chief of Police. The costs of incarceration shall be paid to all jail facilities where the person is held before and after conviction. The costs of incarceration shall not be assessed if in the judgment of the court such costs would impose a manifest hardship on the person, or the property of the person is needed for the maintenance and support of immediate family. Five percent (5%) of the amount collected shall be transmitted to the District Attorney's Council Revolving Fund established by Title 19 Oklahoma Statutes, Section 215.28, and the balance shall be paid by the Court Clerk to the General Fund of the City of Piedmont.

B. The Court may require a person confined in the City jail for any offense to pay the Court Clerk the costs of incarceration as defined above, both before and after conviction by order of the Court.

C. Persons being released from the facility on bail prior to conviction shall be required to post sufficient bail to cover costs of incarceration.

SECTION 6-135 BOND/SECURITY FILING FEE.

The Court Clerk shall charge a fee of Thirty-five Dollars ($35.00) for the initial filing of any bond or any security deposited with the Clerk for subsequent Court appearance of the defendant. Where the defendant has been jailed, twenty-five Dollars ($25.00) of such fee shall be placed into a special revenue account of the City of Piedmont , and used for payments to those entities housing municipal prisoners for the City of Piedmont, with the balance of the fee being placed into a special revenue account reserved for use by the Police Department and Municipal Court. Where the defendant has not been jailed the $35.00 fee shall be retained in a special revenue account reserved for use by the Police Department and Municipal Court. The fee shall be assessed as an additional court cost to the defendant

CHAPTER 2

JUDGE

Section 6-201 Judge; created; qualifications.
Section 6-202 Term of office of judge.
Section 6-203 Appointment of judge, alternate judge.
Section 6-204 Acting judge.
Section 6-205 Compensation.
Section 6-206 Removal of judge from office.
Section 6-207 Vacancy.

SECTION 6-201 JUDGE; CREATED; QUALIFICATIONS.

There shall be one judge of the court. A judge need not be a licensed attorney at law, but, if not, he must be a resident of this city of the age of twenty-five (25) years, possessed of good moral character. A judge who is a licensed attorney may engage in the practice of law in other courts, but he shall not accept employment inconsistent with his duties as judge, or arising out of facts which give rise to or are connected with cases within the jurisdiction of the court,pending therein or which might become subject of proceedings therein. (Prior Code, Sec. 12-5)

SECTION 6-202 TERM OF OFFICE OF JUDGE.

The official term of the judge shall be two (2) years, expiring on the 15th day of April in each odd-numbered year. (Prior Code, Sec. 12-6)

SECTION 6-203 APPOINTMENT OF JUDGE, ALTERNATE JUDGE.

A. Judges shall be appointed by the mayor with the consent of the city council. A proposed appointment shall be submitted in writing to the city council at the next to the last regularly scheduled meeting prior to the day upon which the appointment is to take effect, and shall be acted upon at the next regularly scheduled meeting. The city council may decide upon the proposed appointment by a majority vote of all the members of the council. Failure of decision upon a proposed appointment shall not prevent action thereon at a later regularly scheduled meeting of the council unless the mayor, in writing, withdraws the proposed appointment.

B. There may be appointed for each judge of the court an alternate judge possessed of the same qualifications as the judge. His appointment shall be for the same term and made in the same manner as the judge. He shall sit as judge of the court in any case if the judge is absent from court, unable to act as judge, or disqualified from acting as judge in the case. (Prior Code, Secs. 12-7, 12-9)

Charter Reference: Appointment of judge, Sec. 5-2 of the charter.

SECTION 6-204 ACTING JUDGE.

If at any time there is no judge duly appointed and qualified available to sit as judge, a person possessing the qualifications required by this chapter for the judge shall be appointed as acting judge. The acting judge shall preside as acting judge over the court in the disposition of pending matters until such time as a judge or alternate judge shall be available. (Prior Code, Sec. 12-8)

SECTION 6-205 COMPENSATION.

A judge shall receive such salary as may be established and shall be paid in the same manner as the salaries of other officials of this city. (Prior Code, Sec. 12-10)

SECTION 6-206 REMOVAL OF JUDGE FROM OFFICE.

A. Judges shall be subject to removal from office by the council for the causes prescribed by the constitution and laws of this state for the removal of public officers. Proceedings for removal shall be instituted by the filing of a verified written petition, setting forth facts sufficient to constitute one or more legal grounds for removal. Petitions may be signed and filed by the mayor, or twenty-five (25) or more qualified electors of this city. In the latter event, verification may be executed by one or more of the petitioners.

B. The council shall set a date for hearing the matter and shall cause notice thereof, together with a copy of the petition, to be served personally upon the judge at least ten (10) days before the hearing. At the hearing, the judge shall be entitled to representation by counsel, to present testimony and to cross-examine the witnesses against him, and to have all evidence against him presented in open hearing.

C. So far as can be made applicable, the provisions of the Oklahoma Administrative Procedure Act governing individual proceedings (Title 75, Oklahoma Statutes, Sections 30-317 and any amendments or additions thereto in effect at the time of the hearing) shall govern removal proceedings hereunder.

D. Judgment of removal shall be entered only upon individual votes, by a majority of all members of the council, in favor of such removal. (Prior Code, Sec. 12-11)

SECTION 6-207 VACANCY.

A. A vacancy in the office of judge shall occur if the incumbent:

1. Dies;

2. Resigns;

3. Ceases to possess the qualifications for the office; or

4. Is removed, and the removal proceeding has been affirmed finally in judicial proceedings or is no longer subject to judicial review.

B. Upon the occurrence of a vacancy in the office of judge, the mayor shall appoint a successor to complete the unexpired term, upon the same procedure as an original appointment is made. (Prior Code, Sec. 12-12)

CHAPTER 3

JURY TRIALS

Section 6-301	Right to trial by jury; waiver.
Section 6-302	Selection of jurors.
Section 6-303	Summons of jurors, form; service.
Section 6-304	Composition of jury; duty or jurors.
Section 6-305	Determination of questions of law.
Section 6-306	Verdict.
Section 6-307	Juror's fees.
Section 6-308	Cost bond for jury trial.
Section 6-309	Misconduct of jurors generally.
Section 6-310	Responsibility of officer in charge of jury.

SECTION 6-301 RIGHT TO TRIAL BY JURY, WAIVER.

A. In all prosecutions for any offense for which the City, with concurrence of the Court, seeks imposition of a fine of more than $500.00, or imprisonment plus costs, trial shall be by jury unless waived by the defendant and the City. If trial by jury is waived, trial shall be by the Court.

B. An election waiving jury trial may be changed by the defendant at any time prior to the day for which trial by the Court is set. An election demanding jury trial may be changed at any time prior to the commencement of proceedings to impanel the jury for the trial; but if that change occurs after the case has been set for jury trial, it may not thereafter be changed so as again to demand trial by jury.

SECTION 6-302 SELECTION OF JURORS.

Whenever a calendar has been made up for the trial of cases by jury, the Judge shall request, in writing, the presiding Judge of the District Court for this judicial district to cause the names of a stated number of jurors deemed sufficient to dispose of the cases on the calendar to be drawn from the jury wheel in accordance with the governing statutes of the State, and to be certified by the Clerk of the District Court to the Judge of the Municipal Court. The request shall be made in time for the list to be certified and the jurors to be summoned legally before the trial begins. If it is anticipated that the completion of the calendar will require more than two (2) weeks, the request for jurors shall specify the number required for each two- week period, as provided by law. Additional drawing of other names may also be requested by the Judge, when necessary, in accordance with the law for such additional drawings in the district Court. If, in the future, provisions of the law respecting the drawing of jury lists for the District Court are changed, the Judge shall take such steps in requesting jury lists for the Court as are necessary to comply with the State law.

SECTION 6-303 SUMMONS OF JURORS; FORM; SERVICE.

A. Upon receipt of the jury list, the Clerk of the Court shall cause a summons substantially in the following form to be issued and served upon each person on the list:

STATE OF OKLAHOMA)
) SS.
COUNTY OF CANADIAN)

To (name of juror) Greetings: You are summoned to appear in the Municipal Court for the City of Piedmont, Oklahoma, to be held at (specify the address, room number, etc.) on the ___ day of _____, 20__, at the hour of (specify hour) to serve as a juror in the Court, and to continue in such service until discharged by the Court.

Hereof fail not, under penalty of law.

Issued under the authority of the Court this __ day of _____, 20__.

_____
CLERK OF THE MUNICIPAL COURT
Piedmont, Oklahoma

Seal of the Court

Court _____
Address _____
_____

B. Service shall be made, as the Judge may prescribe by rule or direct by order, either in person upon the juror, by Marshall of the Court, by any member of the Police force of this City, or by the Clerk of the Court through certified mail directed to the juror at his address as given in the jury list with request for a personally signed return receipt. In any proceeding wherein service of summons by mail is an issue, evidence of the due mailing of the summons by the Clerk, or a member of his staff, and the presentation of an official postal return receipt purportedly signed by the addressee shall be prima facie evidence that the summons was duly received by the addressee and, therefore, that he was properly served therewith.

C. Failure to comply with the summons for jury duty shall be an offense, punishable as provided in Section 1-108 of this code for each day of noncompliance.

SECTION 6-304 COMPOSITION OF JURY; DUTY OF JURORS.

A. A jury in the Court shall consist of six (6) jurors, citizens of the City of Piedmont possessing the qualifications of jurors in District Court.

B. After the jurors are sworn, they must sit together and hear the proofs and oral arguments of the parties, which must be delivered in Court and in the presence of the Defendant.

C. A verdict of the jury may be rendered by the concurring vote of five (5) jurors.

SECTION 6-305 DETERMINATION OF QUESTIONS OF LAW.

In all actions tried before a jury, the Judge shall determine all questions of law, including questions as to the introduction of evidence, arising during the trial. He also shall instruct the jury as to the law.

SECTION 6-306 VERDICT.

A. The verdict of the jury, in all cases, must be general. When the jury has arrived at its verdict it must deliver the verdict in the open Court, and the Judge shall cause it to be entered in the case.

B. The jury must not be discharged after the cause is submitted to it until a verdict is rendered unless the Judge, for good cause, discharges it sooner, in which event the Court may proceed again to trial until a verdict is rendered.

SECTION 6-307 JUROR'S FEES.

Jurors shall receive for their services a sum per day as set by the City Council, plus mileage at a rate per mile, as set by the City Council, for each mile necessarily traveled by the most direct route in going to and from the Court one time each day from their respective places of residence. The claims for such compensation shall show the location of the juror's residence, the route and miles traveled, and must be verified as other claims against the City are verified.

SECTION 6-308 COST BOND FOR JURY TRIAL.

When an accused requests a jury trial in the Municipal Court, the Court may fix a reasonable sum as a cost bond and require the accused to deposit the same prior to trial.

SECTION 6-309 MISCONDUCT OF JURORS GENERALLY.

A. No juror or person drawn or summoned as a juror in the Municipal Court shall either make any promise or agreement to give a verdict for or against the City, permit any communication to be made to him, or receive any book, paper, instruments, or information relative to any cause pending before him, except in the regular course of proceedings and the trial of the case.

B. No juror summoned by the court shall ask, receive, or agree to receive any bribe upon any understanding concerning his vote or decision upon any case in which he may be selected as a juror in the Court.

C. No person shall attempt to influence a juror summoned to appear in the Court, or any person summoned as a juror in respect to his verdict, either by means of communication, oral or written, except in the regular course of proceedings; by means of any books, paper, or instruments exhibited otherwise than in the regular course of proceedings; by any means of threat or intimidation; by means of any assurance, promise of any pecuniary or other advantage; or by communicating any statement, argument, or observation relating to the case.

SECTION 6-310 RESPONSIBILITY OF OFFICER IN CHARGE OF JURY.

No officer to whose charge any jury is committed by the Municipal Court shall neglect or wilfully permit such juror, or any of them, either to receive any communication from any person, to make any communication to any person, to obtain or to receive any book, paper, or refreshment, or to leave the jury room without leave of the Court being first obtained.

CHAPTER 4

PROCEEDING AGAINST CORPORATIONS

Section 6-401 Summons; issuance to corporations.
Section 6-402 Form of corporation summons.
Section 6-403 Service of summons.
Section 6-404 Trial.
Section 6-405 Collection of fines.

SECTION 6-401 SUMMONS; ISSUANCE TO CORPORATIONS.

Upon complaint against a corporation being filed with the municipal court, the judge shall issue a summons signed by him with his title of office, requiring a duly authorized officer of the corporation to appear before him at a specific time and place to answer the complaint. The time for such appearance shall not be less than five (5) days after issuance of summons.

SECTION 6-402 FORM OF CORPORATION SUMMONS.

The summons authorized by Section 6-401 of this code must be in substantially the following form:

In the name of the City of Piedmont, Oklahoma.

To _____.

You are hereby summoned to appear before me at _____ (place) on _____ (date and hour) to answer the complaint made against you upon the complaint of _____ for the offense of _____ (designating offense generally).

Dated at the City of Piedmont, Oklahoma, this _____.

_____
Municipal Judge

SECTION 6-403 SERVICE OF SUMMONS.

The summons authorized by Section 6-401 of this code must be served by certified mail, personally delivering a copy to, or other means authorized by state law on the registered agent of the corporation at least ten (10) days before the day of appearance fixed therein, and may also be served by certified mail or other means to the president or head of the corporation, or to the secretary, cashier or managing agent thereof.

SECTION 6-404 TRIAL.

At the time appointed in the summons authorized by Section 6-401 of this code, the municipal judge shall try the complaint in the same manner as in the case of a natural person brought before him.

SECTION 6-405 COLLECTION OF FINES.

When a fine is imposed upon a corporation, upon conviction, it may be collected by the municipal judge making a transcript of his proceedings thereof, together with the judgment of the court duly certified and filed with the clerk of the district court of the county. Execution shall be issued thereon and served by the sheriff of the county as in cases of execution generally.

Court

CHAPTER 5

JUVENILE OFFENDERS

SECTION 6-501 JURISDICTION.

The municipal court of the City of Piedmont may elect to exercise original jurisdiction to hear and determine certain offenses committed by those persons under the age of eighteen (18) years of age and penalize those juveniles found guilty, all as authorized by 10 Oklahoma Statutes, Section 7303-1.2.

SECTION 6-502 CUSTODY AND DETENTION.

A child under the age of eighteen (18) years of age who is taken into custody for the alleged violation of a municipal ordinance relating to the following offenses: (a) vandalism, (b) shoplifting, (c) trespassing, (d) assault, (e) battery, (f) assault and battery, (g) truancy, (h) curfew violations, (I) possession of low-point beer; (j) possession of alcoholic beverages, (k) disorderly conduct, (l) public intoxication, (m) any other municipal ordinance may be temporarily detained by the City in a certified municipal juvenile facility under the following conditions:

(1) the municipality shall immediately take all reasonable steps to attempt to locate the child's parent, legal guardian, legal custodian, or attorney, and determine if said parent, legal guardian, legal custodian, or attorney is willing to appear at the municipal juvenile facility and assume personal custody of the child upon the child's release from such facility.

(2) The child shall be released to the personal custody of his or her parent, legal guardian, legal custodian, or attorney as soon as practicable, and upon the written promise of such parent, legal guardian, legal custodian, or attorney to return the child to municipal court to answer the municipal charges on the date and at the time set by the municipal court.

(3) The child shall be detained in the municipal juvenile facility for no longer than twenty-four (24) hours; provided, if no parent, legal guardian, legal custodian, or attorney appears at the municipal juvenile facility and assumes personal custody of the child within said twenty-four (24) hour period, then custody or release of the shall be determined pursuant to the provisions of Title 10 Oklahoma Statutes.

(4) The child shall not be held in any jail, adult lockup, or adult detention facility unless total separation exists between juveniles and adult spatial areas.

(5) The child shall be provided with adequate fresh drinking water.

(6) The child shall be provided with adequate food not less than three (3) times in a twenty-four (24) hour period.

(7) The child shall be provided with adequate bathroom facilities and bedding.

(8) The child shall be provided with any necessary medical care and treatment.

SECTION 6-503 PENALTIES, SENTENCING ALTERNATIVES, COSTS.

Pursuant to Interlocal cooperation Agreement between the City of Piedmont and the District Court, as authorized by 10 Oklahoma Statutes, Section 73003-1.2, a child under eighteen (18) years of age may be charged, prosecuted, and if convicted fined for violating such municipal ordinance relating to one or more of the offenses listed in Section 6-502 of this chapter; provided that the maximum fine which may be imposed shall not exceed the maximum fine authorized by law. When assessing punishment the court also may require appropriate community service work, not to exceed ninety (90) hours, in lieu of a fine if the product of multiplying the number of hours of community service work by the prevailing minimum wage does not result in a number which exceeds the maximum fine authorized by law, or restitution, or both community service work and restitution. In addition, the court may require the child to receive counseling or other community-based services, if necessary. If a child is prosecuted for an offense in the municipal court, the child shall not be prosecuted for the offenses in the District Court. The municipal court may also impose costs as authorized by law.

SECTION 6-504 CONFIDENTIALITY OF RECORDS.

All municipal arrest records, prosecution records, court records, and court proceedings for cases involving children under eighteen (18) years of age charged with violating municipal ordinances relating to one or more of the offenses listed in Section 6-502 of this Chapter shall be kept confidential and shall not be open to public inspection except by order of the municipal court or as otherwise provided by Title 10 Oklahoma Statutes.

SECTION 6-505 USE OF FUNDS FROM JUVENILE OFFENDER PROSECUTION.

Funds generated from fines paid pursuant to prosecutions under this Chapter shall be earmarked and used by the City only for the following purposes:

(1) To fund local programs which address problems of juvenile crime.

(2) To fund the costs of prosecutions authorized by this chapter.

(3) To fund the costs of detention authorized pursuant to this chapter.

(4) To fund administrative costs related to local programs that address problems of juvenile crime or related to the prosecution, detention, or punishment authorized pursuant to this Chapter.

Such earmarked funds shall not be used by the City for any purpose other than the purposes set forth in subparagraphs 1 through 4 of this section.

SECTION 6-506 FAILURE OF PARENT/GUARDIAN/ CUSTODIAN OF JUVENILE TO HONOR PROMISE TO APPEAR.

It shall be an offense for the parent or legal custodian or legal guardian of a child to fail to return a child to municipal court to answer the municipal charges on the date and time set by the municipal court where such parent, legal custodian, or legal guardian executes a written promise to return the child to municipal court.

It shall be a defense to a prosecution under this section where the parent, legal custodian, or guardian appears at the appointed court date and provides evidence that he/she made a good faith effort to secure the juvenile's appearance in Court.

SECTION 6-507 JUVENILE PROCEEDINGS; PRIVACY.

All cases under this chapter involving juveniles shall be heard separately from cases involving adults. The hearings shall be private, but persons having a direct interest in the case may be admitted. Any victim, relative, or legal guardian of a victim of a juvenile criminal act shall be deemed to have a direct interest in the case.

SECTION 6-508 CITATIONS ISSUED TO JUVENILES.

If a municipal citation is issued to a juvenile under this chapter, the municipal court hearing date shall be indicated on the citation, and notification of the citation shall be mailed by the municipal court to the parents, guardian, legal custodian, or responsible adult relative of the juvenile.

SECTION 6-509 JUVENILE JURISDICTION OF THE MUNICIPAL COURT FOR TRAFFIC OFFENSES.

The municipal court of the City of Piedmont shall retain and exercise original jurisdiction over juveniles charged with violations of the traffic ordinances of the City of Piedmont, and Sections 6-501 through 6-508 of this chapter shall not apply to prosecution of juveniles for traffic violations.

(This page intentionally left blank)

PART 7

FINANCE AND TAXATION

CHAPTER 1

FINANCE GENERALLY

Section 7-101	Appropriation of monies.
Section 7-102	Investments.
Section 7-103	Depositories, designated, deposit of fund.
Section 7-104	Funds secured by unit collateral system.

CHAPTER 2

PURCHASES BY CITY

Section 7-201	Definition.
Section 7-202	By whom made.
Section 7-203	Procedure - competitive bidding.
Section 7-204	When bidding not required.
Section 7-205	Disposition of surplus or obsolete materials, competitive bidding.
Section 7-206	When competitive bidding is not required.

CHAPTER 3

SALES TAX

Section 7-301	Citation of chapter.
Section 7-302	Definitions.
Section 7-303	Classification of taxpayers.
Section 7-304	Subsisting state permits.
Section 7-305	Purpose of revenues; disposition of proceeds.
Section 7-306	Tax rate; sales subject to tax.
Section 7-307	Exemptions; sales subject to other tax.
Section 7-308	Exemptions; governmental and nonprofit entities.
Section 7-309	Exemptions; general
Section 7-310	Exemptions; agriculture.
Section 7-311	Exemptions; manufacturers.
Section 7-312	Exemptions; corporations and partnerships.
Section 7-313	Tas due and payable.
Section 7-314	Payment of tax; brackets.
Section 7-315	Tax constitutes prior claim.
Section 7-316	Vendor's duty to collect tax.
Section 7-317	Returns and remittances; discounts.
Section 7-318	Interest and penalties; delinquency; discount forfeiture.
Section 7-319	Waiver of interest and penalties.

Section 7-320 Erroneous payments; claim for refund.
Section 7-321 Failure to file; fraudulent returns; penalties.
Section 7-322 Tax records confidential.
Section 7-323 Provisions cumulative.
Section 7-324 Amendments to chapter.

CHAPTER 4

USE TAX

Section 7-401 Citation and codification.
Section 7-402 Definitions.
Section 7-403 Excise tax on storage, use or other consumption of intangible, personal property levied.
Section 7-404 Purpose of revenues.
Section 7-405 Exemptions.
Section 7-406 Time when due, returns, payment.
Section 7-407 Tax constitutes debt.
Section 7-408 Collection of tax by retailer or vendor.
Section 7-409 Collection of tax by retailer or vendor not maintaining a place of business within state or both within and without state, permits.
Section 7-410 Revoking permits.
Section 7-411 Remunerative deductions allowed vendors or retailers of other states.
Section 7-412 Interest and penalties, delinquency.
Section 7-413 Waiver of interest and penalties.
Section 7-414 Erroneous payments, claim for refund.
Section 7-415 Fraudulent returns.
Section 7-416 Records confidential.
Section 7-417 Classification of taxpayers.
Section 7-418 Subsisting state permits.
Section 7-419 Provisions cumulative.

CHAPTER 5

911 EMERGENCY SERVICE FEE

Section 7-501 Service fee levied, rate, amendment.
Section 7-502 Administration.

CHAPTER 6

TELEPHONE EXCHANGE FEE

Section 7-601 Inspection fee and service charge.
Section 7-602 Charge in lieu of other license tax.

CHAPTER 7

UTILITY TAX

Section 7-701	Utility fee levied.
Section 7-702	Fee to be in-lieu of franchise.
Section 7-703	Payable quarterly.
Section 7-704	Tax constitutes lien.
Section 7-705	Ouster for failure to pay.
Section 7-706	Revocable permit for gas utility complying with chapter.

CHAPTER 8

UNCLAIMED AND SURPLUS PROPERTY

Section 7-801	Delivery to City Administrator required; records.
Section 7-802	Disposition of personal property, general procedures.
Section 7-803	Seized property related to gambling, report and disposition.
Section 7-804	Seized property related to alcoholic beverages. disposition.
Section 7-805	Property of deceased persons.
Section 7-806	Notice of sale.
Section 7-807	Library book disposition.

CHAPTER 9

ARTICLE I

IDENTITY THEFT PROTECTION PROGRAM

Section 7-901	Identity Theft Protection Program.
Section 7-902	Purpose.
Section 7-903	Definitions.
Section 7-904	Findings.
Section 7-905	Process of establishing a covered account.
Section 7-906	Access to covered account information.
Section 7-907	Credit card payments.
Section 7-908	Sources and types of red flags.
Section 7-909	Prevention and mitigation of identity theft.
Section 7-910	Updating the program.
Section 7-911	Program administration.

ARTICLE 2

TREATMENT OF ADDRESS DISCREPANCIES

Section 7-913	Short title.
Section 7-914	Purpose.
Section 9-915	Definitions.
Section 9-916	Policy.
Section 9-917	Furnishing consumer's address to Consumer Protection Agency.
Section 9-918	Methods of confirming consumer addresses.

CHAPTER 1

FINANCES GENERALLY

Section 7-101 Appropriation of monies.
Section 7-102 Investments.
Section 7-103 Depositories designated, deposit of funds.
Section 7-104 Funds secured by unit collateral system.

SECTION 7-101 APPROPRIATION OF MONIES.

All monies, however derived, belonging to the city shall only be appropriated for such objects, and defraying such expenses as accrue or necessarily arise in the exercise of powers granted by law, the charter and ordinances of the city. No appropriation shall be made without an order to that effect entered upon a proper book to be kept for that purpose by the city. (Prior Code, Sec. 7-1. 7-2, in part)

SECTION 7-102 INVESTMENTS.

The city treasurer or any other person authorized to invest public monies shall invest the same in those investments authorized by the city council or authorized by state law in a manner authorized by either or both such council and statutes.

SECTION 7-103 DEPOSITORIES DESIGNATED, DEPOSIT OF FUNDS.

All banks and financial institutions as are designated by the city council shall be designated as depositories for the funds of the city. The city treasurer shall deposit daily all public funds received by him in these banks. Funds may be transferred from one depository to another upon direction of the treasurer. (Prior Code, Sec. 7-8)

SECTION 7-104 FUNDS SECURED BY UNIT COLLATERAL SYSTEM.

The deposits of the city shall be secured by the unit collateral system provided by state law. The provisions of the state law on the unit collateral system, Sections 516.1 through 516.10 of Title 62 of the Oklahoma Statutes, are hereby adopted insofar as they are applicable to the city. (Prior Code, Sec. 7-8)

CHAPTER 2

PURCHASES BY CITY

Section 7-201	Definition.
Section 7-202	By whom made.
Section 7-203	Procedure - Competitive Bidding Act supersedes.
Section 7-204	When bidding not required.
Section 7-205	Disposition of surplus or obsolete materials, competitive bidding.
Section 7-206	When competitive bidding is not required.

SECTION 7-201 DEFINITION.

The term "contractual services", for the purpose of this Chapter, means services performed by the city by persons not in the employment of the City, and may include the use of equipment or the furnishing of commodities in connection with such services under express or implied contract. Contractual services include: travel, freight, express, parcel post, postage, telephone, telegraph, utilities, rents, repairs, alterations, and maintenance of buildings, equipment, streets, and bridges and other physical facilities of the City; and other services performed by the City by persons not in the employment of the City.

Charter Reference: Purchases generally, Sec. 4-3, 4-4.

SECTION 7-202 BY WHOM MADE.

All purchases of supplies, materials, equipment, and contractual services for the offices, departments and agents of the City government shall be made by the City Manager or by other City personnel in accordance with purchase authorizations issued by the City Manager.

SECTION 7-203 PROCEDURE.

A. The City Manager shall contract for and purchase all supplies, materials, and equipment for the offices, departments, and agencies of the City. The City Manager may also transfer to or between offices, departments, and agencies, or sell surplus or obsolete supplies, materials, and equipment.

B. Before a contract shall be entered into, or any such purchase made involving the expenditure of more than Ten Thousand Dollars ($10,000.00), or any sale made of property the value of which is more than Five Thousand Dollars ($5,000.00), such contract or sale shall:

1. Be approved by the City Council;

2. Be submitted for competitive bidding, except as provided in this Chapter.

3. Have written notice given by the City Manager for sealed bids for the furnishing of such supplies, materials, or equipment where competitive bidding is required hereunder.

C. The notice required in this section shall state the time and place for filing the bids, shall contain an ample description of the supplies, materials, and/or equipment to be purchased or sold, the time and place the bids will be opened, and that all bids may be rejected. The notice shall be mailed to all vendors who have filed a written request for mailing of bid notices, and shall be published one time at least ten (10) days before the date set for opening bids. The bids shall be in writing, sealed, and filed with the City Clerk prior to the time they are to be opened. The bids may be rejected, or the City Manager may readvertise for bids, or after due consideration thereof may award a contract to purchase such supplies, materials, and/or equipment from the lowest and best responsible bidder. However, the City Manager may, at his option, purchase any such materials, supplies, and equipment through central purchasing of the State. The procedures outlined in the Oklahoma Public Competitive Bidding Act shall supersede the provisions of this Chapter concerning the construction of public improvements as defined in the Open Public Competitive Bidding Act.

Charter Reference: Competitive Bidding, Sec. 4-3, 4-4.

State Law Reference: Public Competitive Bidding Act, 61 O.S., Secs. 101, et seq.

SECTION 7-204 WHEN BIDDING NOT REQUIRED.

The following may be purchased without giving an opportunity for competitive bidding:

A. Supplies, materials, equipment, or contractual services where the cost does not exceed Ten Thousand Dollars ($10,000.00) in a single transaction.

B. Supplies, materials, equipment, or contractual services which can be furnished only by a single dealer or a sole source vendor, or which have a uniform price wherever bought;

C. Supplies, materials, equipment, or contractual services purchased from another unit of government at a price deemed below that obtainable from private dealers, including government surplus, or purchased at auction at a price deemed below that obtainable elsewhere;

D. Contractual services (gas, electricity, telephone service, and the like) purchased from a public utility at a price or rate determined by the State Corporation Commission or other government authority.

E. Supplies, materials, equipment, or contractual services when purchased at a price not exceeding a price set therefor by the State purchasing agency, or any other State agency, authorized to regulate prices for things purchased by the State (whether such price is determined by a contract negotiated with a vendor or otherwise);

F. Contractual services of a professional nature, such as engineering, architectural, medical, and legal services; or,

G. When an emergency is declared to exist by the City Council.

Charter Reference: Authority of Council to make exceptions from competitive bidding requirements, Sec. 4-3.

SECTION 7-205 DISPOSITION OF SURPLUS OR OBSOLETE MATERIALS, BIDDING.

No surplus or obsolete supplies, materials, or equipment of a value of more than Five Thousand Dollars ($5,000.00) may be sold until the procedures outlined in this Chapter have been followed.

SECTION 7-206 WHEN COMPETITIVE BIDDING NOT REQUIRED.

The City Manager may sell the following without giving an opportunity for competitive bidding:

A. Surplus or obsolete supplies, materials, or equipment whose total value does not exceed Five Thousand Dollars ($5,000.00) in a single transaction; or,

B. Supplies, materials, or equipment when sold at a price at least as great as that paid by the City for the same; or,

C. Where the Council has authorized the sale of surplus property at public auction under such terms, conditions, and notice as the Council may prescribe or as the City Manager deems appropriate.

CHAPTER 3

SALES TAX

Section 7-301	Citation of chapter.
Section 7-302	Definitions.
Section 7-303	Classification of taxpayers.
Section 7-304	Subsisting state permits.
Section 7-305	Purpose of revenues; disposition of proceeds.
Section 7-306	Tax rate; sales subject to tax.
Section 7-307	Exemptions; sales subject to other tax.
Section 7-308	Exemptions; governmental and nonprofit entities.
Section 7-309	Exemptions; general.
Section 7-310	Exemptions; agriculture.
Section 7-311	Exemptions; manufacturers.
Section 7-312	Exemptions; corporations and partnerships.
Section 7-313	Tax due and payable.
Section 7-314	Payment of tax; brackets.
Section 7-315	Tax constitutes prior claim.
Section 7-316	Vendor's duty to collect tax.
Section 7-317	Returns and remittances; discounts.
Section 7-318	Interest and penalties; delinquency; discount forfeiture.
Section 7-319	Waiver of interest and penalties.
Section 7-320	Erroneous payments; claim for refund.
Section 7-321	Failure to file; fraudulent returns; penalties.
Section 7-322	Tax records confidential.
Section 7-323	Provisions cumulative.
Section 7-324	Amendments to chapter.

SECTION 7-301 CITATION OF CHAPTER.

This chapter shall be known and may be cited as the City Sales Tax Ordinance. (Prior Code, Sec. 7-21)

State Law Reference: State sales tax provisions, 68 O.S. Secs. 1350, et seq.; City powers, procedures to levy, 68 O.S. Secs. 2701 et seq.

Ed. Note: Ordinance No. 97, effective January 1, 1975, levied a one cent sales tax. Ordinance No. 124, effective November 1, 1978, levied a second cent sales tax. Ord. No. 297, 1/27/92, levied two (2) additional cents taxes earmarked as provided herein.

SECTION 7-302 DEFINITIONS.

A. The definitions of words, terms and phrases contained in the Oklahoma Sales Tax Code, 68 O.S. Section 1352, and Sections 596 and 793 of Title 37 of the Oklahoma Statutes, are hereby adopted by reference and made a part of this chapter.

B. The term "tax collector," as used herein, shall mean the department of the city or the official agency of the state duly designated according to law or contract authorized by law to administer the collection of the tax herein levied. (Prior Code, Sec. 7-22, in part)

SECTION 7-303 CLASSIFICATION OF TAXPAYERS.

For the purpose of this chapter, the classification of taxpayers hereunder shall be as prescribed by state law for purposes of the Oklahoma Sales Tax Code. (Prior Code, Sec. 7-24)

SECTION 7-304 SUBSISTING STATE PERMITS.

All valid and subsisting permits to do business issued by the Oklahoma Tax Commission pursuant to the Oklahoma Sales Tax Code are, for the purpose of this chapter, hereby ratified, confirmed, and adopted in lieu of any requirement for an additional city permit for the same purpose. (Prior Code, Sec. 7-25)

SECTION 7-305 PURPOSE OF REVENUES; DISPOSITION OF PROCEEDS.

A. It is hereby declared to be the purpose of the revenues generated by the first and second cent sales taxes levied herein to provide revenues for the support of the functions of the municipal government of the City.

B. The additional two percent (2%) tax levied by Ordinance Number 297 shall be allocated and spent as follows: one-half for general government purposes and one-half for capital improvements. (Prior Code, Sec. 7-27; Ord. No. 297, 1/27/92).

C. The additional one percent (1%) levied by Ordinance No. 548 shall be allocated and spent only for salaries, benefits, expenses, and equipment for fire department services.

SECTION 7-306 TAX RATE; SALES SUBJECT TO TAX.

There is hereby levied within the City of Piedmont an excise tax of five percent (5%) upon the gross proceeds derived from all sales taxable under the Oklahoma Sales Tax Code. The lists and definitions of taxable sales under the Oklahoma Sales Tax Code are hereby adopted by reference as if set forth fully herein.

SECTION 7-307 EXEMPTIONS; SALES SUBJECT TO OTHER TAX.

There is hereby specifically exempted from the tax levied by this chapter the gross receipts or gross proceeds exempted from the Oklahoma Sales Tax code inclusive but not exclusive of, and derived from the:

1. Sale of gasoline or motor fuel on which the motor fuel tax, gasoline excise tax, or special fuels tax levied by state law has been paid;

BLANK

2. Sale of motor vehicles or any optional equipment or accessories attached to motor vehicles on which the Oklahoma Motor Vehicle Excise Tax levied by state law has been paid;

3. Sale of crude petroleum or natural or casinghead gas and other products subject to gross production tax under state law. This exemption shall not apply when such products are sold to consumer or user for consumption or use, except when used for injection into the earth for the purpose of promoting or facilitating the production of oil or gas. This paragraph shall not operate to increase or repeal the gross production tax levied by the laws of this state; and

4. Sale of aircraft on which the tax levied pursuant to Sections 6001 through 6004 of Title 68 of the Oklahoma Statutes has been paid.

(Prior Code, Sec. 7-29)

SECTION 7-308 EXEMPTIONS; GOVERNMENTAL AND NONPROFIT ENTITIES.

There are hereby specifically exempted from the tax levied by this chapter:

1. Sale of tangible personal property or services to the United States government or to the State of Oklahoma, any political subdivision of this state or any agency of a political subdivision of the state; provided, all sales to contractors in connection with the performance of any contract with the United States Government, State of Oklahoma or any of its political subdivisions shall not be exempted from the tax levied by this chapter, except as hereinafter provided;

2. Sales of property to agents appointed or contracted with by agencies or instrumentalities of the United States Government if ownership and possession of such property transfers immediately to the United States Government;

3. Sales made directly by county, district or state fair authorities of this state, upon the premises of the fair authority, for the sole benefit of the fair authority;

4. Sale of food in cafeterias or lunch rooms of elementary schools, high schools, colleges or universities which are operated primarily for teachers and pupils and are not operated primarily for the public or for profit;

5. Dues paid to fraternal, religious, civic, charitable or educational societies or organizations by regular members thereof, provided, such societies or organizations operate under what is commonly termed the lodge plan or system, and provided such societies or organizations do not operate for a profit which inures to the benefit of any individual member or members thereof to the exclusion of other members;

6. Sale of tangible personal property or services to or by churches, except sales made in the course of business for profit or savings, competing with other persons engaged in the same or similar business;

7. The amount of proceeds received from the sale of admission tickets which is separately stated on the ticket of admission for the repayment of money borrowed by any accredited state-supported college or university for the purpose of constructing or enlarging any facility to be used for the staging of an athletic event, a theatrical production, or any other form

of entertainment, edification or cultural cultivation to which entry is gained with a paid admission ticket. Such facilities include, but are not limited to, athletic fields, athletic stadiums, field houses, amphitheaters and theaters. To be eligible for this sales tax exemption, the amount separately stated on the admission ticket shall be a surcharge which is imposed, collected and used for the sole purpose of servicing or aiding in the servicing of debt incurred by the college or university to effect the capital improvements hereinbefore described;

8. Sales of tangible personal property or services to the council organizations or similar state supervisory organizations of the Boy Scouts of America, Girl Scouts of U.S.A. and the Campfire Girls shall be exempt from sales tax;

9. Sale of tangible personal property or services to any county, municipality, public school district, the institutions of the Oklahoma system of higher education and the Grand River Dam Authority, or to any person with whom any of the above named subdivisions or agencies of this state has duly entered into a public contract pursuant to law, necessary for carrying out such public contract or to any subcontractor to such a public contract. Any person making purchases on behalf of such subdivision or agency of this state shall certify, in writing, on the copy of the invoice or sales ticket to be retained by the vendor that the purchases are made for and on behalf of such subdivision or agency of this state and set out the name of such public subdivision or agency. Any person who wrongfully or erroneously certifies that purchases are for any of the above named subdivision or agencies of this state or who otherwise violates this section shall be guilty of a misdemeanor and upon conviction thereof shall be fined an amount equal to double the amount of the sales tax involved or incarcerated for not more than sixty (60) days or both;

10. Sales of tangible personal property or services to private institutions of higher education and private elementary and secondary institutions of education accredited by the State Department of Education or registered by the State Board of Education for purposes of participating in federal programs or accredited as defined by the Oklahoma State Regents for Higher Education which are exempt from taxation pursuant to the provisions of Section 501(c)(3) of the Internal Revenue Code, including materials, supplies, and equipment used in the construction and improvement of buildings and other structures owned by the institutions and operated for educational purposes. Any person, firm, agency or entity making purchases on behalf of any institution, agency or subdivision in this state, shall certify in writing, on the copy of the invoice of sales ticket the nature of the purchases, and violation of this act shall be a misdemeanor as set forth in Paragraph (9) of this section;

11. Tuition and educational fees paid to private institutions of higher education and private elementary and secondary institutions of education accredited by the State Department of Education or registered by the State Board of Education for purposes of participating in federal programs or accredited as defined by the Oklahoma State Regents for Higher Education which are exempt from taxation pursuant to the provisions of the Section 501(c)(3) of the Internal Revenue Code; and

12. Sales of tangible personal property made by public or private school for grade levels kindergarten through twelfth grade, a public school district, public school board, public school student group or organization or public school district personnel for purposes of raising funds for the benefit of such school, school district, school board, student group or organization. For purposes of this paragraph, "public or private school" shall mean any public or private institution of education accredited by the State Department of Education or registered by the State Board of Education for purposes of participating in federal programs. Sale of tangible personal property in this paragraph shall not include sale of admission tickets or concessions at athletic events.

(Prior Code, Sec. 7-30)

SECTION 7-309 EXEMPTIONS; GENERAL.

There are hereby specifically exempted from the tax levied by this chapter:

1. Transportation of school pupils to and from elementary schools or high schools in motor or other vehicles;

2. Transportation of persons where the fare of each person does not exceed One Dollar ($1.00), or local transportation of persons within the corporate limits of a municipality except by taxicab;

3. Carrier sales of newspapers and periodicals made directly to consumers. Other sales of newspapers and periodicals where any individual transaction does not exceed seventy-five cents ($0.75). A carrier is a person who regularly delivers newspapers or periodicals to subscribers on an assigned route;

4. Sales for resale to persons engaged in the business of reselling the articles purchased, whether within or without the state, provided that such sales to residents of this state are made to persons to whom sales tax permits have been issued as provided in this chapter. This exemption shall not apply to the sales of articles made to persons holding permits when such persons purchase items for their use and which they are not regularly engaged in the business of reselling; neither shall this exemption apply to sales of tangible personal property to peddlers, solicitors and other salesmen who do not have an established place of business and a sales tax permit;

5. Sales of advertising space in newspapers and periodicals and billboard advertising service, and any advertising through the electronic media, including radio, television and cable television;

6. Eggs, feed, supplies, machinery and equipment purchased by persons regularly engaged in the business of raising worms, fish, any insect or any other form of terrestrial or aquatic animal life and used for the purpose of raising same for marketing. This exemption shall only be granted and extended to the purchaser when the items are to be used and in fact are used in the raising of animal life as set out above. Each purchaser shall certify, in writing, on the invoice or sales ticket retained by the vendor that he is regularly engaged in the business of raising such animal life and that the items purchased will be used only in such business. The vendor shall certify to the Oklahoma Tax Commission that the price of the items has been reduced to grant the full benefit of the exemption. Violation hereof by the purchaser or vendor shall be a misdemeanor;

7. Sales of medicine or drugs prescribed for the treatment of human beings by a person licensed to prescribe the medicine or drugs. This exemption shall not apply to proprietary or patent medicines as defined by Section 353.1 of Title 59 of the Oklahoma Statutes;

8. Transfers of title or possession of empty, partially filled, or filled returnable oil drums to any person who is not regularly engaged in the business of selling, reselling or otherwise transferring empty, partially filled, or filled returnable oil drums;

9. Sales of food or food products for home consumption which are purchased in whole or in part with coupons issued pursuant to the federal food stamp program as authorized by

Sections 2011 through 2029 of Title 7 of the United States Code, as to that portion purchased with such coupons. The exemption provided for such sales shall be inapplicable to such sales upon the effective date of any federal law that removes the requirement of the exemption as a condition for participation by the State of Oklahoma in the federal food stamp program; and

10. Nothing herein shall be construed as limiting or prohibiting the city from levying and collecting taxes on the sale of natural or artificial gas and electricity, whether sold for residential or commercial purposes. Any sales tax levied by the city on natural or artificial gas and electricity shall be in effect regardless of ordinance or contractual provisions referring to previously imposed state sales tax on such items.

(Prior Code, Sec. 7-31)

SECTION 7-310 EXEMPTIONS; AGRICULTURE.

There are hereby specifically exempted from the tax levied by this chapter:

1. Sales of agricultural products produced in this state by the producer thereof directly to the consumer or user when such articles are sold at or from a farm and not from some other place of business, as follows:

a. Farm, orchard or garden products;

b. Dairy products sold by a dairyman or farmer who owns all the cows from which the dairy products offered for sale are produced;

c. Livestock sold by the producer at a special livestock sale; and

d. The provisions of this paragraph shall not be construed as exempting sales by florists, nurserymen or chicken hatcheries, or sales of dairy products by any other business except as set out herein;

2. Livestock, including cattle, horses, mules, or other domestic or draft animals, sold by the producer by private treaty or at a special livestock sale;

3. Sale of baby chicks, turkey poults and starter pullets used in the commercial production of chickens, turkeys and eggs, provided that the purchaser certifies, in writing, on the copy of the invoice or sales ticket to be retained by the vendor that the pullets will be used primarily for egg production;

4. Sale of salt, grains, tankage, oyster shells, mineral supplements, limestone and other generally recognized animal feeds for the following purposes and subject to the following limitations:

a. Feed which is fed to poultry and livestock, including breeding stock and wool-bearing stock, for the purpose of producing eggs, poultry, milk or meat for human consumption;

b. Feed purchased in Oklahoma for the purpose of being fed to and which is fed by the purchaser to horses, mules or other domestic or draft animals used directly in the producing and marketing of agricultural products;

c. Any stock tonics, water purifying products, stock sprays, disinfectants or other such agricultural supplies;

d. Poultry shall not be construed to include any fowl other than domestic fowl kept and raised for the market or production of eggs;

e. Livestock shall not be construed to include any pet animals such as dogs, cats, birds or such other fur-bearing animals; and

f. This exemption shall only be granted and extended where the purchaser of feed that is to be used and in fact is used for a purpose that would bring about an exemption hereunder executes an invoice or sales ticket in duplicate on a form to be prescribed by the Tax Commission. The purchaser may demand and receive a copy of the invoice or sales ticket and the vendor shall retain a copy;

5. Sales of items to be and in fact used in the production of agricultural products. Sale of the following items shall be subject to the following limitations:

a. Sales of agricultural fertilizer to any person regularly engaged, for profit, in the business of farming or ranching. Each such purchaser shall certify, in writing, on the copy of the invoice or sales ticket to be retained by the vendor, that he is so engaged in farming or ranching and that the material purchased will be used only in such business;

b. Sales of agricultural fertilizer to any person engaged in the business of applying such materials on a contract or custom basis to land owned or leased and operated by persons regularly engaged, for profit, in the business of farming or ranching. Each such purchaser shall certify, in writing, on the copy of the invoice or sales ticket to be retained by the vendor that he is engaged in the business of applying such materials to lands owned or leased and operated by persons regularly engaged, for profit, in the business of farming or ranching, and shall show in the certificate the name or names of such owner or lessee and operator, the location of the lands on which the materials are to be applied to each such land, and he shall further certify that his contract price has been reduced so as to give the farmer or rancher the full benefit of this exemption;

c. Sales of agricultural fertilizer, pharmaceuticals and biologicals to persons engaged in the business of applying such materials on a contract or custom basis shall not be considered to be sales to contractors under this chapter, and the sales shall not be considered to be taxable sales within the meaning of the Oklahoma Sales Tax Code. As used in this section, "agricultural fertilizer" "pharmaceuticals" and "biologicals" mean any substance sold and used for soil enrichment or soil corrective purposes or for promoting the growth and productivity of plants or animals;

d. Sales of agricultural seed or plants to any person regularly engaged, for profit, in the business of farming or ranching. This section shall not be construed as exempting from sales tax, seed which is packaged and sold for

use in noncommercial flower and vegetable gardens;

e. Sales of agricultural chemical pesticides to any person regularly engaged, for profit, in the business of farming or ranching. For the purposes of this act, agricultural chemical pesticides shall include any substance or mixture of substances intended for preventing, destroying, repelling or mitigating any insect, snail, slug, rodent, bird, nematode, fungus, weed or any other form of terrestrial or aquatic plant or animal life or virus, bacteria or other microorganism, except viruses, bacterial or other microorganisms on or in living man, or any substance or mixture of substances intended for use as a plant regulator, defoliant or desiccant; and

f. This exemption shall only be granted and extended to the purchaser where the items are to be used and in fact are used in the production of agricultural products. Each purchaser shall certify, in writing, on the copy of the invoice or sales ticket to be retained by the vendor, that the material purchased will only be used in his farming occupation. The vendor shall certify to the Oklahoma Tax Commission that the contract price of the items has been reduced to grant the full benefit of the exemption. Violation hereof by the purchaser or vendor shall be a misdemeanor, and, upon violation and conviction for a second offense the Oklahoma Tax Commission shall revoke the vendor's sales tax permit; and

6. Sale of farm machinery, repair parts thereto or fuel, oil, lubricants and other substances used for operation and maintenance of the farm machinery to be used directly on a farm or ranch in the production, cultivation, planting, sowing, harvesting, processing, spraying, preservation or irrigation of any livestock, poultry, agricultural or dairy products produced from such lands. Each purchaser of farm machinery, repair parts thereto or fuel must certify, in writing, on the copy of the invoice or sales ticket to be retained by the vendor, that he is engaged in farming or ranching and that the farm machinery, repair parts thereto or fuel will be used only in farming or ranching. The exemption provided for herein shall not apply to motor vehicles. Each purchaser shall certify, in writing, on the copy of the invoice or sales ticket to be retained by the vendor, that the material purchased will only be used in his farming occupation. The vendor shall certify to the Oklahoma Tax Commission that the price of the items has been reduced to grant the full benefit of the exemption. Violation hereof by the purchaser or vendor shall be a misdemeanor, and, upon violation and conviction for a second offense the Oklahoma Tax Commission shall revoke the vendor's sales tax permit.

(Prior Code, Sec. 7-32)

SECTION 7-311 EXEMPTIONS; MANUFACTURERS.

There are hereby specifically exempted from the tax levied by this chapter:

1. Goods, wares, merchandise and property purchased for the purpose of being used or consumed in the process of manufacturing, compounding, processing, assembling or preparing for sale a finished article and such goods, wares, merchandise or property become integral parts of the manufactured, compounded, processed, assembled or prepared products or are consumed in the process of manufacturing, compounding, processing, assembling or preparing products for resale. The term "manufacturing plants" shall mean those establishments primarily engaged in manufacturing or processing operations, and generally recognized as such;

2. Ethyl alcohol when sold and used for the purpose of blending same with motor fuel on which motor fuel tax is levied by state law;

3. Sale of machinery and equipment purchased and used by persons establishing new manufacturing plants in Oklahoma, and machinery and equipment purchased and used by persons in the operation of manufacturing plants already established in Oklahoma. This exemption shall not apply unless such machinery and equipment is incorporated into, and is directly used in, the process of manufacturing property subject to taxation under this chapter. The term "manufacturing plants" shall mean those establishments primarily engaged in manufacturing or processing operations, and generally recognized as such;

4. Sales of containers when sold to a person regularly engaged in the business of reselling empty or filled containers or when purchased for the purpose of packaging raw products of farm, garden or orchard for resale to the consumer or processor. This exemption shall not apply to the sale of any containers used more than once and which are ordinarily known as returnable containers, except returnable soft drink bottles. Each and every transfer of title or possession of such returnable containers in this state to any person who is not regularly engaged in the business of selling, reselling or otherwise transferring empty or filled containers shall be taxable under this code. And, this exemption shall not apply to the sale of labels or other materials delivered along with items sold but which are not necessary or absolutely essential to the sale of the sold merchandise;

5. Sale of tangible personal property manufactured in Oklahoma when sold by the manufacturer to a person who transports it to another state for immediate and exclusive use in some other state; or

6. Machinery, equipment, fuels and chemicals incorporated into and directly used or consumed in the process of treatment to substantially reduce the volume or harmful properties of controlled industrial waste at treatment facilities specifically permitted pursuant to the Controlled Industrial Waste Disposal Act and operated at the place of waste generation, or facilities approved by the State Department of Health for the cleanup of a site of contamination. The term controlled industrial waste may include low-level radioactive waste for the purpose of this subsection.

(Prior Code, Sec. 7-33)

SECTION 7-312 EXEMPTIONS; CORPORATIONS AND PARTNERSHIPS.

There are hereby specifically exempted from the tax levied in this chapter:

1. The transfer of tangible personal property, as follows:

   a. From one corporation to another corporation pursuant to a reorganization. As used in this subparagraph the term "reorganization" means a statutory merger or consolidation or the acquisition by a corporation of substantially all of the properties of another corporation when the consideration is solely all or a part of the voting stock of the acquiring corporation, or of its parent or subsidiary corporation;

b. In connection with the winding up, dissolution or liquidation of a corporation only when there is a distribution in kind to the shareholders of the property of such corporation;

c. To a corporation for the purpose of organization of such corporation where the former owners of the property transferred are immediately after the transfer in control of the corporation, and the stock or securities received by each is substantially in proportion to his interest in the property prior to the transfer;

d. To a partnership in the organization of such partnership if the former owners of the property transferred are immediately after the transfer, members of such partnership and the interest in the partnership, received by each, is substantially in proportion to his interest in the property prior to the transfer; or

e. From a partnership to the members thereof when made in kind in the dissolution of such partnership; and

2. Sale of an interest in tangible personal property to a partner or other person who after such sale owns a joint interest in such tangible personal property where the state sales or use tax has previously been paid on such tangible personal property.

(Prior Code, Sec. 7-34)

SECTION 7-313 TAX DUE AND PAYABLE.

The tax levied under this chapter shall be due and payable at the time and in the manner and form prescribed for payment of the state sales tax under the sales tax law of the state. (Prior Code, Sec. 7-35)

SECTION 7-314 PAYMENT OF TAX; BRACKETS.

A. The tax herein levied shall be paid to the tax collector at the time in form and manner provided for payment of state sales tax under the sales tax law of the state.

B. The bracket system for the collection of the city sales tax by the tax collector shall be as the same is hereafter adopted by the agreement of the city and the tax collector, in the collection of both the city sales tax and the state sales tax. (Prior Code, Sec. 7-36)

SECTION 7-315 TAX CONSTITUTES PRIOR CLAIM.

Taxes, penalty and interest due hereunder shall at all times constitute a prior, superior and paramount claim as against the claims of unsecured creditors and may be collected by suit as any other debt. (Prior Code, Sec. 7-37)

SECTION 7-316 VENDOR'S DUTY TO COLLECT TAX.

A. The tax levied hereunder shall be paid by the consumer or user to the vendor; and each and every vendor shall collect from the consumer or user the full amount of the tax levied, or an amount equal as nearly as possible or practicable to the average equivalent thereof.

B. Vendors shall add the tax imposed hereunder, or the average equivalent thereof, to the sales price or charge; and, when added, such tax shall constitute a part of such price or charge, shall be a debt from the consumer or user to the vendor until paid, and shall be recoverable at law in the same manner as other debts.

C. No vendor shall willfully or intentionally fail, neglect or refuse to collect the full amount of the tax levied; or willfully or intentionally fail, neglect or refuse to comply with the provisions of this chapter; or remit or rebate to a consumer or user, either directly or indirectly, and by whatsoever means, all or any part of the tax herein levied; or make in any form of advertising, verbally or otherwise, any statement which infers that he is absorbing the tax, or paying the tax for the consumer or user by an adjustment of prices or at a price including the tax, or in any manner whatsoever. (Prior Code, Sec. 7-38)

State Law Reference: Vendor's duty to collect tax, 68 O.S. Sec. 1310.

SECTION 7-317 RETURNS AND REMITTANCES; DISCOUNTS.

Returns and remittances of the tax herein levied and collected shall be made to the tax collector at the time and in the manner, form and amount as prescribed for returns and remittances required by the state sales tax code; and remittances of tax collected hereunder shall be subject to the same discount as may be allowed by the code for collection of state sales taxes. (Prior Code, Sec. 7-39)

SECTION 7-318 INTEREST AND PENALTIES; DELINQUENCY; DISCOUNT FORFEITURE.

A. Section 217 of Title 68 of the Oklahoma Statutes is adopted and made a part of this chapter.

B. Interest and penalties at the rates and in amounts specified in the state statute cited in Subsection A herein are hereby levied and shall be applicable in cases of delinquency in reporting and paying the tax levied by this chapter.

C. The failure or refusal of any taxpayer to make and transmit the reports and remittances of tax in the time and manner required by this chapter shall cause such tax to be delinquent.

D. If such delinquency continues for a period of five (5) days, the taxpayer shall forfeit his claim to any discount allowed under this chapter. (Prior Code, Sec. 7-40)

SECTION 7-319 WAIVER OF INTEREST AND PENALTIES.

A. The interest or penalty or any portion thereof accruing by reason of a taxpayer's failure to pay the city tax herein levied may be waived or remitted in the same manner as provided for the waiver or remittance as applied in administration of the state sales tax provided in Section 220 of Title 68 of the Oklahoma Statutes.

B. To accomplish the purposes of this section, the applicable provisions of Section 220 of Title 68 of the Oklahoma Statutes are adopted by reference and made a part of this chapter. (Prior Code, Sec. 7-41)

SECTION 7-320 ERRONEOUS PAYMENTS; CLAIM FOR REFUND.

A. Refund or erroneous payment of the city sales tax herein levied may be made to any taxpayer making such erroneous payment in the same manner and procedure, and under the same limitations of time, as provided for administration of the state sales tax as set forth in Section 227 of Title 68 of the Oklahoma Statutes.

B. To accomplish the purposes of this section, the applicable provisions of Section 227 of Title 68 of the Oklahoma Statutes are adopted by reference and made a part of this chapter. (Prior Code, Sec. 7-42)

SECTION 7-321 FAILURE TO FILE; FRAUDULENT RETURNS; PENALTIES.

A. No person shall:

1. Intentionally fail or refuse to make tax reports and remittances as required under this chapter; or

2. Intentionally make false and fraudulent tax reports for the purpose of avoiding or escaping payment of any tax or portion thereof due under this chapter.

B. Any person required to collect and remit sales tax pursuant to the state sales tax code or the city code, and engaging in any of the callings, trades, avocations, professions, businesses or occupations for which a license is required by the city, and applying for such license, must submit proof as a condition precedent to issuing such license of a valid sales tax permit number issued by the State of Oklahoma.

C. Any license issued by the city to any person engaging in any of the callings, trades, avocations, businesses, professions or occupations for which a license is required by the city code may be suspended or revoked for failure to maintain a lawful sales tax license or collect and remit sales tax if and as required by the state sales tax code or the city code.

D. In addition to all civil penalties provided by this chapter, any violation of this section shall subject the offending taxpayer to the penalty set forth in Section 1-108 of this code. Each day of such violation shall be considered a separate offense and charged separately. (Prior Code, Sec. 7-43, in part)

SECTION 7-322 TAX RECORDS CONFIDENTIAL.

The confidential and privileged nature of the records and files concerning the administration of the city sales tax is legislatively recognized and declared; and to protect the same the provisions of Section 205 of Title 68 of the Oklahoma Statutes of the state sales tax code, and all subsections thereof, are hereby adopted by reference and made fully effective and applicable to administration of the city sales tax as if here set forth in full. (Prior Code Sec. 7-44)

SECTION 7-323 PROVISIONS CUMULATIVE.

The provisions of this chapter shall be cumulative and in addition to any and all other taxing provisions of city ordinances. (Prior Code, Sec. 7-46)

SECTION 7-324 AMENDMENTS TO CHAPTER.

The council, by ordinance duly enacted, is authorized to make such administrative and technical changes or additions in the method and manner of administration and enforcing this chapter as may be necessary or proper for efficiency and fairness except that the rate of the tax herein provided shall not be changed without approval of the qualified electors of the city as provided by law. (Prior Code, Sec. 7-45)

Section 7-401	Citation and codification.
Section 7-402	Definitions.
Section 7-403	Excise tax on storage, use or other consumption of intangible, personal property levied.
Section 7-404	Purpose of revenues.
Section 7-405	Exemptions.
Section 7-406	Time when due, returns, payment.
Section 7-407	Tax constitutes debt.
Section 7-408	Collection of tax by retailer or vendor.
Section 7-409	Collection of tax by retailer or vendor not maintaining a place of business within state or both within and without state, permits.
Section 7-410	Revoking permits.
Section 7-411	Remunerative deductions allowed vendors or retailers of other states.
Section 7-412	Interest and penalties, delinquency.
Section 7-413	Waiver of interest and penalties.
Section 7-414	Erroneous payments, claim for refund.
Section 7-415	Fraudulent returns.
Section 7-416	Records confidential.
Section 7-417	Classification of taxpayers.
Section 7-418	Subsisting state permits.
Section 7-419	Provisions cumulative.

SECTION 7-401. CITATION AND CODIFICATION.

This chapter shall be known and may be cited as "City of Piedmont Use Tax".

Ed. Note: Ord No 248, 9/2/86 levied the first two cent use tax. Ord No. 307 6/22/92, levied a second cent use tax.

SECTION 7-402. DEFINITIONS.

The definitions of words, terms and phrases contained in the Oklahoma Use Tax Code, Section 1401 of Title 68 of the Oklahoma Statutes, are hereby adopted by reference and made a part of this chapter. In addition thereto, the following words and terms shall be defined as follows:

1. "Tax collector" means the department of the city government of the official agency of the state, duly designed according to law or contract authorized by law, to administer the collection of the tax herein levied; and,

2. "Transaction means sale.

SECTION 7-403. EXCISE TAX ON STORAGE, USE, OR OTHER CONSUMPTION OF TANGIBLE, PERSONAL PROPERTY LEVIED.

There is hereby levied and there shall be paid by every person storing, using, or otherwise

consuming within the municipality tangible, personal property purchased or brought into this municipality, an excise tax on the storage, use, or other consumption within the municipality of such property at the rate of five percent (5%) of the purchase price of such property. Such tax shall be paid by every person storing, using, or otherwise consuming within the municipality tangible, personal property purchased or brought into the municipality. The additional tax levied hereunder shall be paid at the time of importation or storage of the property within the municipality, and shall be assessed to only property purchased outside Oklahoma; provided, that the tax levied herein shall not be levied against tangible, personal property intended solely for use outside the municipality, but which is stored in the municipality pending shipment outside the municipality, or which is temporarily retained in the municipality for the purpose of fabrication, repair, testing, alteration, maintenance, or other service. Any person liable for payment of the tax authorized herein may deduct from such tax any local or municipal sales tax previously paid on such goods or services; provided, that the amount deducted shall not exceed the amount that would have been due if the taxes imposed by the municipality had been levied on the sale of such goods or services. The additional one percent use tax adopted herein shall be dedicated only for fire department expenditures to include salaries, benefits, expenses and equipment for fire services.

SECTION 7-404. PURPOSE OF REVENUES.

It is hereby declared to be the purpose of this chapter to provide revenues for the support of the functions of the municipal government of the City, and any and all revenues derived hereunder may be expended by the governing body of the City for any purpose for which funds may be lawfully expended as authorized.

SECTION 7-405. EXEMPTIONS.

The provisions of this chapter shall not apply:

1. In respect to the use of an article of tangible, personal property brought into the City by a nonresident individual visiting in this City for his or her personal use or enjoyment while within the City;

2. In respect to the use of tangible, personal property purchased for resale before being used;

3. In respect to the use of any article of tangible, personal property on which a tax, equal to or in excess of that levied by both the Oklahoma Use Tax Code and the City Use Tax has been paid by the person using such tangible, personal property in the City, whether such tax was levied under the laws of Oklahoma or some other state or municipality of the United States. If any article of tangible, personal property has already been subjected to a tax by Oklahoma or any other state or municipality in respect to its sale or use, in an amount less than the tax imposed by both the Oklahoma Use Tax Code and City Use Tax, the provision of this chapter shall also apply to it by a rate measured by the difference only between the rate provided by both the sale or use was computed. Provided, that no credit shall be given for taxes paid in another state or municipality, if that sate or municipality does not grant like credit for taxes paid in Oklahoma and the City;

4. In respect to the use of machinery and equipment purchased and used by persons establishing new manufacturing or processing plants in the city, and machinery and equipment purchased and used by persons to the operation of manufacturing plants already established in the city. Provided, this exemption shall not apply unless such machinery and equipment is incorporated into, and is directly used in, the process of manufacturing property subject to taxation under the sales tax code of the city. The term "manufacturing plants" means those establishments primarily engaged in manufacturing or processing operations, and generally recognized as such;

5. In respect to the use of tangible, personal property now specifically exempted from taxation under the sales tax code of the city;

6. In respect to the use of any article of tangible, personal property brought into the city by an individual with intent to become a resident of this city where such personal property is for such individual's personal use or enjoyment;

7. In respect to the use of any article of tangible, personal property used or to be used by commercial airlines or railroads; or

8. In respect to livestock purchased outside Oklahoma and brought into this city for feeding or breeding purposes, and which is later resold.

(Ord. No. 248, 9/2/86)

SECTION 7-406 TIME WHEN DUE, RETURNS, PAYMENT.

The tax levied by this chapter is due and payable at the time and in the manner and form prescribed for payment of the State Use Tax under the Use Tax Code of the State of Oklahoma. (Ord. No. 248, 9/2/86)

SECTION 7-407 TAX CONSTITUTES DEBT.

Such taxes, penalty and interest due hereunder shall at all times constitute a prior, superior and paramount claim as against the claims of unsecured creditors, and may be collected by suit as any other debt. (Ord. No. 248, 9/2/86)

SECTION 7-408 COLLECTION OF TAX BY RETAILER OR VENDOR.

Every retailer or vendor maintaining places of business both within and without the state, and making sales of tangible, personal property from a place of business outside this state for use in this city shall at the time of making such sales collect the use tax levied by this chapter from the purchaser and give to the purchaser a receipt therefore in the manner and form prescribed by the Tax Commission, if the Tax Commission shall, by regulation, require such receipt. Each retailer or vendor shall list with the Tax Commission the name and address of all his agents operating in this city and location of any and all distribution or sales houses or offices or other places of business in the city. (Ord. No. 248, 9/2/86)

SECTION 7-409 COLLECTION OF TAX BY RETAILER OR VENDOR NOT MAINTAINING A PLACE OF BUSINESS WITHIN STATE OR BOTH WITHIN AND WITHOUT STATE, PERMITS.

The Tax Commission may, in its discretion, upon application, authorize the collection of the

tax herein levied by any retailer or vendor not maintain a place of business within this state but who makes sales of tangible, personal property for use in this city and by the out-of-state place of business of any retailer or vendor maintaining places of business both within and without this state and making sales of tangible, personal property such out-of-state place of business for use in this city. Such retailer or vendor may be issued, without charge, a permit to collect such taxes by the Tax Commission in such manner and subject to such regulations and agreements as it shall prescribe. When so authorized, it shall be the duty of such retailer or vendor to collect the tax upon all tangible, personal property sold to his knowledge for use within this city. Such authority and permit may be cancelled when at any time the Tax Commission considers that such tax can more effectively be collected from the person using such property in this city. Provided, however, that in all instances where such sales are made or completed by delivery to the purchaser within this city by the retailer or vendor in such retailer's or vendor's vehicle, whether owned or leased (not by common carrier), such sales or transactions shall continue to be subject to applicable city sales tax at the point of delivery and the tax shall be collected and reported under taxpayer's sales tax permit number accordingly. (Ord. No. 248, 9/2/86)

SECTION 7-410 REVOKING PERMITS.

Whenever any retailer or vendor not maintaining a place of business in this state, or both within and without this state, and authorized to collect the tax herein levied, fails to comply with any of the provisions of this chapter of the Oklahoma Use Tax Code or any orders, rules or regulations of the Tax Commission, the Tax Commission may, upon notice and hearing as provided for in Section 1408 of Title 68 of the Oklahoma Statutes, by order revoke the use tax permit, if any, issued to such retailer or vendor, and if any such retailer or vendor is a corporation authorized to do business in this state may, after notice and hearing above provided, cancel the corporation's license to do business in this state and shall issue a new license only when such corporation has complied with the obligations under this chapter, the Oklahoma Use Tax Code, or any orders, rules or regulations of the Tax Commission. (Ord. No. 248, 9/2/86)

SECTION 7-411 REMUNERATIVE DEDUCTIONS ALLOWED VENDORS OR RETAILERS OF OTHER STATES.

Returns and remittances of the tax herein levied and collected shall be made to the Tax Commission at the time and in the manner, form and amount as prescribed for returns and remittances required by the Oklahoma Use Tax Code; and remittances of tax collected hereunder shall be subject to the same discount as may be allowed by the code for the collection of state use taxes. (Ord. No. 248, 9/2/86)

SECTION 7-412 INTEREST AND PENALTIES, DELINQUENCY.

Section 217 of Title 68 of the Oklahoma Statutes is hereby adopted and made a part of this chapter, and interest and penalties at the rates and in the amounts as herein specified are hereby levied and shall be applicable in cases of delinquency in reporting and paying the tax levied by this chapter. Provided, that the failure or refusal of any retailer or vendor to make and transmit the reports and remittances of tax in the time and manner required by this chapter shall cause such tax to be delinquent. In addition, if such delinquency continues for a period of five (5) days, the retailer or vendor shall forfeit his claim to any discount allowed under this chapter. (Ord. No. 248, 9/2/86)

SECTION 7-413 WAIVER OF INTEREST AND PENALTIES.

The interest or penalty or any portion thereof accruing by reason of a retailer's or vendor's failure to pay the city tax herein levied may be waived or remitted in the same manner as provided for the waiver or remittance as applied in administration of the State Use Tax provided in Section 227 of Title 68 of the Oklahoma Statutes, and to accomplish the purposes of this section the applicable provisions of Section 220 are hereby adopted by reference and made a part of this chapter. (Ord. No. 248, 9/2/86)

SECTION 7-414 ERRONEOUS PAYMENTS, CLAIM FOR REFUND.

Refund of erroneous payment of the city use tax herein levied may be made to any taxpayer making such erroneous payment in the same manner and procedure, and under the same limitations of time, as provided for administration of the State Use Tax as set forth in Section 227 of Title 68 of the Oklahoma Statutes, and to accomplish the purpose of this section, the applicable provisions of Section 227 are hereby adopted by reference and made a part of this chapter. (Ord. No. 248, 9/2/86)

SECTION 7-415 FRAUDULENT RETURNS.

In addition to all civil penalties provided by this chapter, the willful failure or refusal of any taxpayer to make reports and remittances herein required, or the making of any false and fraudulent report for the purpose of avoiding or escaping payment of any tax or portion thereof rightfully due under this chapter shall be an offense, and upon conviction thereof the offending taxpayer shall be punished as provided in Section 1-108 of this code. Each day of noncompliance with this chapter shall constitute a separate offense. (Ord. No. 248, 9/2/86)

SECTION 7-416 RECORDS CONFIDENTIAL.

The confidential and privileged nature of the records and files concerning the administration of the city use tax is legislatively recognized and declared, and to protect the same the provisions of Section 205 of Title 68 of the Oklahoma Statutes, of the State Use Tax Code, and each subsection thereof, is hereby adopted by reference and made fully effective and applicable to administration of the city use tax as is herein set forth in full. (Ord. No. 248, 9/2/86)

SECTION 7-417 CLASSIFICATION OF TAXPAYERS.

For the purpose of this chapter, the classification of taxpayers hereunder shall be as prescribed by state law for purposes of the Oklahoma Use Tax Code. (Ord. No. 248, 9/2/86)

SECTION 7-418 SUBSISTING STATE PERMITS.

All valid and subsisting permits to do business issued by the Tax Commission pursuant to the Oklahoma Use Tax Code are for the purpose of this chapter hereby ratified, confirmed and adopted in lieu of any requirement for an additional city permit for the same purpose. (Ord. No. 248, 9/2/86)

SECTION 7-419 PROVISIONS CUMULATIVE.

The provisions hereof shall be cumulative, and in addition to any and all other taxing provisions of the city ordinances. (Ord. No. 248, 9/2/86)

CHAPTER 5

911 EMERGENCY SERVICE FEE

Section 7-501 Service fee levied, rate, amendment.
Section 7-502 Administration.

SECTION 7-501 SERVICE FEE LEVIED, RATE, AMENDMENT.

The rate for 911 emergency telephone service is hereby established at a rate of three percent (3%) of the recurring charges as designated by the tariff for exchange for telephone service or its equivalent within the city in accordance with Section 2811 of Title 63 of the Oklahoma Statutes, beginning January 1, 1993. The city council may amend the rate for subsequent years by resolution adopted by the city council. (Ord. No. 274, 12/27/88; Ord. No. 309, 8/24/92)

Ed. Note: Ord. No. 274 set the rate at 5%. Ord. No. 309 set the rate at 3%.

SECTION 7-502 ADMINISTRATION.

The city council is authorized to designate by resolution an appropriate agency or agencies to administer and collect the fee for 911 emergency telephone service. (Ord. No. 274, 12/27/88)

CHAPTER 6

TELEPHONE EXCHANGE FEE

Section 7-601 Inspection fee and service charge.
Section 7-602 Charge in lieu of other license tax.

SECTION 7-601 INSPECTION FEE AND SERVICE CHARGE.

A. There is hereby levied an annual inspection fee and service charge upon each and every person operating a telephone exchange in the city to compensate the city for the expenses incurred and services rendered incident to the exercise of its police power, supervision, police regulation and police control of the construction of lines and equipment of the telephone company in the city.

B. The amount of the inspection fee and service charge shall be an amount equal to two percent (2%) of the gross revenues for each current year for exchange telephone transmission service rendered wholly within the limits of the city.

C. The inspection fee and charge shall be due and payable to the city on or before the first day of April of each year and shall be paid into and appropriated and expended from the general revenue fund of the city. (Prior Code, Sec. 7-3)

State Law Reference: City powers to levy tax on utilities, 68 O.S. Secs. 2601 et seq.

SECTION 7-602 CHARGE IN LIEU OF OTHER LICENSE TAX.

During continued substantial compliance with the terms of this chapter by the owner of any telephone exchange, the charge levied by this chapter shall be and continue to be in lieu of all concessions, charges, excise, franchise, license, privilege, and permit fees or taxes or assessments except ad valorem taxes. This section is not intended to extinguish or abrogate any existing arrangement whereby the city is permitted to use the underground conduit, duct space or pole contracts of the company for the fire alarm and police call systems of the city, or either of them. (Prior Code, Sec. 7-4)

CHAPTER 7

UTILITY FEE

Section 7-701	Utility fee levied.
Section 7-702	Fee to be in-lieu of franchise.
Section 7-703	Payable quarterly.
Section 7-704	Tax constitutes lien.
Section 7-705	Ouster for failure to pay.
Section 7-706	Revocable permit for gas utility complying with chapter.

SECTION 7-701 UTILITY FEE LEVIED.

From and after August 27, 1990, there is hereby levied and assessed an annual tax of two percent (2%) upon the gross receipts from residential and commercial sales of electricity or gas in the city, which tax shall be in lieu of any other franchise, license, occupation or excise tax levied by the city, all as provided by Sections 2601 et seq. of Title 68 of the Oklahoma Statutes. (Ord. No. 284, 8/27/90; Ord. No. 312, 12/28/92; Ord. No. 314, 1/25/93)

SECTION 7-702 FEE TO BE IN-LIEU OF FRANCHISE.

The tax levied under this chapter shall, when levied, apply to all persons, firms, associations or corporations engaged in the business of furnishing electricity or gas within the corporate limits of the city, except it shall not apply to any person, firm, association or corporation operating under a valid franchise from the city. (Ord. No. 284, 8/27/90; Ord. No. 312, 12/28/92; Ord. No. 314, 1/25/93)

SECTION 7-703 PAYABLE QUARTERLY.

A. The tax levied under this chapter applicable to sales of electricity shall remain in effect until repealed and shall be payable quarterly on the 15th day of January, April, July and October.

B. The tax levied under this chapter applicable to sales of gas shall be levied for a term of not less than one year and shall be payable quarterly.

C. The tax shall be placed in the general revenue fund of the city. Amounts not paid when due shall bear interest at the rate of ten percent (10%) per annum until paid. (Ord. No. 284, 8/27/90; Ord. No. 312, 12/28/92; Ord. No. 314, 1/25/93)

SECTION 7-704 TAX CONSTITUTES LIEN.

The tax so imposed in this chapter shall constitute a first a prior lien on all the assets located within the city of any person, firm or corporation engaged in the business of selling electricity or gas within the city limits of the city. (Ord. No. 284, 8/27/90; Ord. No. 312, 12/28/92; Ord. No. 314, 1/25/93)

SECTION 7-705 OUSTER FOR FAILURE TO PAY.

Any person, firm or corporation failing or refusing to pay such tax when levied shall be regarded as a trespasser and may be ousted from the city. In addition, thereto, an action may be

maintained against such person, firm or corporation for the amount of the tax, and all expenses of collecting same, including reasonable attorney's fees. (Ord. No. 284, 8/27/90)

SECTION 7-706 REVOCABLE PERMIT GRANTED FOR GAS UTILITY COMPLYING WITH CHAPTER.

Any person, firm, association or corporation engaged in the business of furnishing gas within the city limits,not operating under a valid franchise from the city, and upon whom the tax provided in this chapter is imposed, is hereby granted a revocable permit by the city for so long as this chapter remains in effect as to taxes on sales of gas and the taxes are paid in accordance with the terms of this chapter to acquire, construct, erect, install, extend, repair, remove, relocate, replace, operate and maintain a system of works, pipes, pipelines, apparatus, structures and appurtenances in, across, upon and under the streets, alleys, avenues, boulevards, lanes, parks, parkways, sidewalks, parkings, driveways, and rights of way, utility easements, and other ways, places, areas, and grounds, all being sometimes referred to herein as "streets, alleys, avenues, and other public ways, places, and grounds", in the city, as now constituted, and as may be added to hereafter, for the purpose of transporting, distributing and selling gas to the city, its inhabitants, and the public generally for domestic, commercial and industrial uses, and for any and all other purposes for which gas, during the period of this revocable permit may be used, together with the right to enter upon the streets, alleys, avenues and other public ways, places and grounds of the city for the purpose of constructing, erecting,installing, extending, relocating, operating, maintaining, removing and repairing the works, pipes, pipelines and all necessary apparatus, machinery, structures and appurtenances. (Ord. No. 312, 12/28/92; Ord. No. 314, 1/25/93)

CHAPTER 8

UNCLAIMED AND SURPLUS PROPERTY

Section 7-801	Delivery to city administrator required; records.
Section 7-802	Disposition of personal property, general procedures.
Section 7-803	Seized property related to gambling, report and disposition.
Section 7-804	Seized property related to alcoholic beverages, disposition.
Section 7-805	Property of deceased persons.
Section 7-806	Exchange of unclaimed or confiscated weapons.
Section 7-807	Recovery by owner.

SECTION 7-801 DELIVERY TO CITY ADMINISTRATOR REQUIRED; RECORDS.

A. All personal property which comes into the possession of any police officer, which has been found or stolen or taken off the person or out of the possession of any prisoner or person suspected of or charged with being a criminal, and which is not known to belong to some person laying claim thereto, shall be, by the officer securing possession thereof, delivered into the charge of the city administrator. The city administrator shall, in a permanent record book kept for that purpose, make a record sufficient to identify the property, with the date and circumstances of the receipt thereof and the name of the person from whom it was taken and the place where it was found. The record shall also disclose the subsequent disposal thereof, giving the date of sale, name and address of the purchaser, and the amount for which it was sold.

B. For the purpose of this chapter, "city administrator" means the city administrator or his designee. (Prior Code, Sec. 17-1 to 17-4, as amended)

State Law Reference: Disposition of personal property by police chief, procedures, application to destroy, 11 O.S. Sec. 34-104; Uniform unclaimed property disposition act, 60 O.S. Sec. 655; relating to finders of lost goods, 15 O.S. Secs. 511 et seq.; disposal of stolen or embezzled property coming into hands of police officers, 22 O.S. Secs. 1321 et seq.; disposal of liquor and gambling equipment seized by police officers, 22 O.S. Secs. 1261 et seq.; alcoholic beverages seized in violation of law, 37 O.S. Sec. 539.

SECTION 7-802 DISPOSITION OF PERSONAL PROPERTY, GENERAL PROCEDURES.

A. The city administrator is authorized to sell personal property, other than animals, money or legal tender of the United States, except as provided in Subsection B of this section, which has come into his possession in any manner if:

1. The owner of the personal property is unknown or has not claimed the property;

2. The property has been in the custody of the city administrator for at least thirty (30) days; or

3. The property or any part thereof is no longer needed to be held as evidence or for any other purpose in connection with any litigation.

Any owner, to recover or claim property, must be able to satisfactorily prove ownership to the city administrator. For the purpose of this chapter, "city administrator" means the city administrator

or his designee.

B. Any property found by a person other than public official which shall be delivered to any police officer for "identification", if not claimed or identified within thirty (30) days, shall, within ten (10) additional days thereafter, if requested by the finder, be returned to him, and a record of such disposal made thereof.

C. The city administrator shall file an application in the district court of the county requesting the authority of the court to conduct a sale of such personal property or money or legal tender which has a fair market value of more than its face value. The city administrator shall attach to his application a list describing such property or money or legal tender including any identifying numbers and marks, the date the property or money or legal tender came into his possession, and the name of the owner and his address, if known. The court shall set the application for hearing not less than ten (10) days nor more than twenty (20) days after filing of the application.

D. At least ten (10) days prior to the date of the hearing, notice of the hearing shall be sent by certified mail to each owner at his address as listed in the application. The notice shall contain a brief description of the property or money or legal tender of the owner and the place and date of the hearing. The notice shall be posted at the assigned place for the posting of city notices, and at two (2) other public places in the city.

E. If no owner appears and established ownership to the property or money or legal tender at the hearing, the court shall enter an order authorizing the city administrator to sell the personal property or money or legal tender for cash to the highest bidder. After the court issues the order, the city administrator will transfer the property, listed on the order, to the clerk, who will sell the property at an auction sale, after at least five (5) days notice of the sale has been published. The city administrator shall thereafter make a return of the sale, and the order of the court confirming the sale shall vest title to the property or money or legal tender in the purchaser. The money received from the sale of the personal property or money or legal tender shall be deposited in the city's general fund.

F. All money or legal tender of the United States, except as provided in Subsection B of this section, which has come into the possession of the city administrator pursuant to the circumstances provided for in Subsection A of this section, shall be transferred by the city administrator to the city clerk for deposit in the general fund. Prior to any such transfer, the city administrator shall file an application in the district court requesting the court to enter an order authorizing him to transfer the money for deposit in the general fund. The application shall describe the money or legal tender, any serial numbers, the date the same came into his possession, and the name of the owner and his address, if known. Upon filing the application which may be joined with an application as described in Subsection B of this section, a hearing shall be set not less than ten (10) days nor more than twenty (20) days from the filing of the application. Notice of the hearing shall be given as provided for in Subsection C of this section. The notice shall state that upon failure of anyone to appear to prove ownership to the money or legal tender, the court shall order the same to be deposited in the general fund. The notice may be combined with a notice to sell personal property as provided for in Subsection B of this section. If no one appears to claim and prove ownership to the money or legal tender at the hearing, the court shall order the same to be transferred to the general fund as provided in this subsection.

G. The provisions of this section shall not apply to any dangerous or deadly weapons, narcotic or poisonous drugs, explosives, or any property of any kind or character, which the

possession of is prohibited by law, nor to any property for which a specific procedure is otherwise established by law, ordinance or proper order. By order of the trial court, any such property filed as an exhibit or held by the municipality shall be destroyed or sold or disposed of, pursuant to the conditions prescribed in such order. (Prior Code, Sec. 17-1 to 17-4, in part)

State Law Reference: Similar provisions 11 O.S. Sec. 34-104.

SECTION 7-803 SEIZED PROPERTY RELATED TO GAMBLING, REPORT AND DISPOSITION.

A. If any personal property used for the purpose of violating any of the gambling laws of this state, shall be seized by any officer or person with or without a search warrant, such officer or person is hereby required within five (5) days of the seizure to make a written report under oath and file the same with the county clerk, which report shall in detail state the name of the officer or person making the seizure, the place where seized and an inventory of the property or articles so taken into possession. Within five (5) days after seizing such property, the officer shall deliver the property to the sheriff of the county and take the sheriff's receipt therefor, in duplicate, and the sheriff shall retain the same and all thereof until the same shall be destroyed pursuant to the orders of the court.

B. In computing the time, five (5) days, Sundays and holidays shall be excluded and not counted.

C. A duplicate copy of the receipt shall be filed with the county clerk, who shall keep a record of same. However, the sheriff and his deputies shall be required to make the affidavit and issue the receipt and otherwise comply with the provisions of this section. The sheriff shall be liable on his bond for the safe keeping of all such property so turned over to him under the provisions of this section.

State Law Reference: Similar provisions, 22 O.S. Sec. 1261.

SECTION 7-804 SEIZED PROPERTY RELATED TO ALCOHOLIC BEVERAGES, DISPOSITION.

If city police officers seize:

1. Any apparatus, equipment, vehicle or instrumentality used for, or intended for use in manufacturing or transporting any alcoholic beverages in violation of the state alcoholic beverage control laws; or

2. Any alcoholic beverages possessed, sold, transported, manufactured, kept or stored in violation of the state alcoholic beverage control laws, and if the court finds from a preponderance of the evidence that the property seized was lawfully subject to seizure, then the court shall render judgment accordingly and order the property forfeited to the city in which the seizure of the property took place. Such seized property shall be sold by the city administrator, after giving ten (10) days' notice by one publication in a legal newspaper of the county at least ten (10) days before such sale. Appeal from such an order may be taken as in civil cases. When such property is sold under the provisions of this section, the proceeds thereof shall be distributed as follows:

a. First, to the payment of the costs of the case in which the order of forfeiture was made and the actual expenses of preserving the property; and

b. Second, the remainder shall be deposited with the city.

(Prior Code, Sec. 17-1 to 17-4, in part)

State Law Reference: Similar provisions, 37 O.S. Sec. 539.

SECTION 7-805 PROPERTY OF DECEASED PERSONS.

The personal property of a deceased person shall be delivered only to the next of kin of such person or to the legally appointed representative of his estate. If the personal property is claimed by the legally appointed representative of the estate of the deceased, a certified copy of the order of the district court appointing such person shall be deemed sufficient authority to support the claim. If the personal property is claimed by the next of kin, the claimant shall furnish an affidavit to the effect that he is the person entitled to possession of the property; the affidavit shall be deemed sufficient authority to support the claim. If personal property of a deceased person remains unclaimed for a period of ninety (90) days, it shall be disposed of in the appropriate manner provided in this chapter. (Prior Code, Sec. 17-1 to 17-4, in part)

SECTION 7-806 EXCHANGE OF UNCLAIMED OR CONFISCATED WEAPONS.

A. Unclaimed or confiscated weapons which have been in the possession of the police department for one hundred twenty (120) days or more may be traded by the city administrator, with the approval of the city administrator or his designee, for new weapons for use by the police department. The unclaimed or confiscated weapons may only be traded to such gun dealers who have complied with applicable state and federal regulations concerning firearms and, in the opinion of the city administrator and the city administrator or his designee, are reputable.

B. In trading such unclaimed or confiscated weapons, the city administrator or his designee shall advertise for bids for such trade. Such advertisement for bids shall be done in accordance with prevailing and established bid procedure as formulated by the purchasing entity of the city.

C. The value of such unclaimed and confiscated weapons as hereinabove discussed shall in all cases be determined by their fair market value of the new weapons received in such trade.

SECTION 7-807 RECOVERY BY OWNER.

If any property is sold as herein provided, and the owner thereof takes and recovers possession of same from the purchaser, the amount paid therefor shall be returned to the purchaser, upon verified claim being submitted and approved by the city administrator. (Prior Code, Sec. 17-1 to 17-4, in part)

(This page intentionally left blank)

(This page intentionally left blank)

CHAPTER 9

ARTICLE I

IDENTITY THEFT PROTECTION PROGRAM

Section 7-901	Identity Theft Protection Program
Section 7-902	Purpose
Section 7-903	Definitions
Section 7-904	Findings
Section 7-905	Process of establishing a covered account
Section 7-906	Access to covered account infom1ation
Section 7-907	Credit card payments
Section 7-908	Sources and types of red flags
Section 7-909	Prevention and mitigation of identity theft
Section 7-910	Updating the program
Section 7-911	Program administration

ARTICLE 2

TREATMENT OF ADDRESS DISCREPANCIES

Section 7-913	Short title.
Section 7-914	Purpose.
Section 7-915	Definitions.
Section 7-916	Policy.
Section 7-917	Furnishing consumer's address to Consumer Protection Agency.
Section 7-918	Methods of confirming consumer addresses.

WHEREAS pursuant to federal law the Federal Trade Commission adopted Identity Theft Rules requiring the creation of certain policies relating to the use of consumer reports, address discrepancy and the detection, prevention and mitigation of identity theft;

WHEREAS the Federal Trade Commission regulations, adopted as 16 CFR § 681.2 require creditors, as defined by 15 U.S.C. § 1681a(r)(5) to adopt red flag policies to prevent and mitigate identity theft with respect to covered accounts;

WHEREAS 15 U.S.C. § 168la(r)(5) cites 15 C.S.C. § 1691a, which defines a creditor as a person that extends, renews or continues credit, and defines 'credit' in part as the right to purchase property or services and defer payment therefore;

WHEREAS the Federal Trade Commission regulations include utility companies in the definition of creditor;

WHEREAS the City of Piedmont is a creditor with respect to 16 CFR § 681.2 by virtue of providing utility services or by otherwise accepting payment for municipal services in arrears;

WHEREAS the Federal Trade Commission regulations define 'covered account' in part as an account that a creditor provides for personal, family or household purposes that is designed to allow multiple payments or transactions and specifies that a utility account is a covered account;

WHEREAS the Federal Trade Commission regulations require each creditor to adopt an Identity Theft Prevention Program which will use red flags to detect, prevent and mitigate identity theft related to information used in covered accounts;

WHEREAS the City provides utility, court and other services for which payment is made after the product is consumed or the service has otherwise been provided which by virtue of being utility accounts are covered accounts;

WHEREAS customer accounts for court proceedings, and public safety services for which payment is made after the product is consumed or the service has otherwise been provided are covered accounts by virtue of being for household purposes and allowing for multiple payments or transactions;

WHEREAS the Federal Trade Commission regulations, adopted as 16 CFR 681.1, require users of consumer credit reports to develop policies and procedures relating to address discrepancies between information provided by a consumer and information provided by a consumer credit company;

WHEREAS the City of Piedmont may use consumer credit reports to establish various customer accounts; and

WHEREAS the duly elected governing authority of the City of Piedmont is the Mayor and council thereof;

SECTION 7-901 SHORT TITLE.

This Article shall be known as the Identity Theft Prevention Program.

SECTION 7-902 PURPOSE.

The purpose of this Article is to comply with 16 CFR § 681.2 in order to detect, prevent and mitigate identity theft by identifying and detecting identity theft red flags and by responding to such red flags in a manner that will prevent identity theft.

SECTION 7-903 DEFINITIONS.

For purposes of this Article, the following definitions apply[1]:

(a) 'City' means the City of Piedmont.

(b) 'Covered account' means (i) An account that a financial institution or creditor offers or maintains, primarily for personal, family, or household purposes, that involves or is designed to permit multiple payments or transactions, such as a credit card account, mortgage loan, automobile loan, margin account, cell phone account, utility account, checking account, or savings account; and (ii) Any other account that the financial institution or creditor offers or maintains for which there is a reasonably foreseeable risk to customers or to the safety and soundness of the financial institution or creditor from identity theft, including financial, operational, compliance, reputation, or litigation risks.

(c) 'Credit' means the right granted by a creditor to a debtor to defer payment of debt or to incur debts and defer its payment or to purchase property or services and defer payment therefore.

(d) 'Creditor' means any person who regularly extends, renews, or continues credit; any person who regularly arranges for the extension, renewal, or continuation of credit; or any assignee of an original creditor who participates in the decision to extend, renew, or continue credit and includes utility companies and telecommunications companies.

(e) 'Customer' means a person that has a covered account with a creditor.

(f) 'Identity theft' means a fraud committed or attempted using identifying information of another person without authority.

(g) 'Person' means a natural person, a corporation, government or governmental subdivision or agency, trust, estate, partnership, cooperative, or association.

(h) 'Personal Identifying Information' means a person's credit card account information, debit card information bank account information and drivers' license information and for a natural person includes their social security number, mother's birth name, and date of birth.

(i) 'Red flag' means a pattern, practice, or specific activity that indicates the possible existence of identity theft.

(j) 'Service provider' means a person that provides a service directly to the City.

[1] Other than "city" and "personal identifying information", definitions provided in this section are based on the definitions provided in 16 CFR § 681.2.

SECTION 7-904 FINDINGS.

1. The City is a creditor pursuant to 16 CFR § 681.2 due to its provision or maintenance of covered accounts for which payment is made in arrears.

2. Covered accounts offered to customers for the provision of city services include: Water, sewer, sanitation services, building inspection and zoning application, court proceedings, and various public safety purposes.

3. The City's previous experience with identity theft related to covered accounts is not recorded.

4. The processes of opening a new covered account, restoring an existing covered account, and making payments on such accounts. have been identified as potential processes in which identity theft could occur.

5. The City limits access to personal identifying information to those employees responsible for or otherwise involved in opening or restoring covered accounts or accepting payment for use of covered accounts. Information provided to such employees is entered directly into the city's computer system and is not otherwise recorded.

6. The City determines that there is a low risk of identity theft occurring in the following ways *(if any)*:

a. Use by an applicant of another person's personal identifying information to establish a new covered account;
b. Use of a previous customer's personal identifying information by another person in an effort to have service restored in the previous customer's name;
c. Use of another person's credit card, bank account, or other method of payment by a customer to pay such customer's covered account or accounts;
d. Use by a customer desiring to restore such customer's covered account of another person's credit card, bank account, or other method of payment;

SECTION 7-905 PROCESS OF ESTABLISHING A COVERED ACCOUNT.

1. As a precondition to opening a covered account in the city, each applicant shall provide the City with personal identifying information of the customer *(for example, a valid government issued identification card containing a photograph of the customer or, for customers who are not natural persons, a photograph of the customer's agent opening the account.* Such information shall be entered directly into the city's computer system and shall not otherwise be recorded.

2. Each account shall be assigned an account number and personal identification number (PIN) which shall be unique to that account. The city may utilize computer software to randomly generate assigned PINs and to encrypt account numbers and PINs.

SECTION 7-906 ACCESS TO COVERRED ACCOUNT INFORMATION.

1. Access to customer accounts shall be password protected and shall be limited to authorized City personnel.

2. Such password(s) shall be changed on a regular basis, shall be at least 8 characters in length and shall contain letters, numbers and symbols.

3. Any unauthorized access to or other breach of customer accounts is to be reported immediately to the City Manager and the password changed immediately.

4. Personal identifying information included in customer accounts is considered confidential and any request or demand for such information shall be immediately forwarded to the City Manager and the City Attorney.

SECTION 7-907 CREDIT CARD PAYMENTS.

1. In the event that credit card payments that are made over the Internet are processed through a third party service provider, such third party service provider shall certify that it has an adequate identity theft prevention program in place that is applicable to such payments.

2. All credit card payments made over the telephone or the city's website shall be entered directly into the customer's account information in the computer data base.

3. Account statements and receipts for covered accounts shall include only the last four digits of the credit or debit card or the bank account used for payment of the covered account.

SECTION 7-908 SOURCES AND TYPES OF RED FLAGS.

All employees responsible for or involved in the process of opening a covered account, restoring a covered account or accepting payment for a covered account shall check for red flags as indicators of possible identity theft and such red flags may include:

1. Alerts from consumer reporting agencies, fraud detection agencies or service providers. Examples of alerts include but are not limited to:

a. A fraud or active duty alert that is included with a consumer report;
b. A notice of credit freeze in response to a request for a consumer report;
c. A notice of address discrepancy provided by a consumer reporting agency;
d. Indications of a pattern of activity in a consumer report that is inconsistent with the history and usual pattern of activity of an applicant or customer, such as:

i. A recent and significant increase in the volume of inquiries;

ii. An unusual number of recently established credit relationships;
iii. A material change in the use of credit, especially with respect to recently established credit relationships; or
iv. An account that was closed for cause or identified for abuse of account privileges by a financial institution or creditor.

2. Suspicious documents. Examples of suspicious documents include:

a. Documents provided for identification that appear to be altered or forged;
b. Identification on which the photograph or physical description is inconsistent with the appearance of the applicant or customer;
c. Identification on which the information is inconsistent with information provided by the applicant or customer;
d. Identification on which the information is inconsistent with readily accessible information that is on file with the financial institution or creditor, such as a signature card or a recent check; or
e. An application that appears to have been altered or forged, or appears to have been destroyed and reassembled.

3. Suspicious personal identification, such as suspicious address change. Examples of suspicious identifying information include:

a. Personal identifying information that is inconsistent with external information sources used by the financial institution or creditor. For example:

i. The address does not match any address in the consumer report; or
ii. The Social Security Number (SSN) has not been issued, or is listed on the Social Security Administration's Death Master File.

b. Personal identifying information provided by the customer is not consistent with other personal identifying information provided by the customer, such as a lack of correlation between the SSN range and date of birth.
c. Personal identifying information or a phone number or address, is associated with known fraudulent applications or activities as indicated by internal or third-party sources used by the financial institution or creditor.
d. Other information provided, such as fictitious mailing address, mail drop addresses, jail addresses, invalid phone numbers, pager numbers or answering services, is associated with fraudulent activity.
e. The SSN provided is the same as that submitted by other applicants or customers.
f. The address or telephone number provided is the same as or similar to the account number or telephone number submitted by an unusually large number of applicants or customers.
g. The applicant or customer fails to provide all required personal identifying information on an application or in response to notification that the application is incomplete.

h. Personal identifying information is not consistent with personal identifying information that is on file with the financial institution or creditor.
i. The applicant or customer cannot provide authenticating information beyond that which generally would be available from a wallet or consumer report.

4. Unusual use of or suspicious activity relating to a covered account. Examples of suspicious activity include:

a. Shortly following the notice of a change of address for an account, City receives a request for the addition of authorized users on the account.
b. A new revolving credit account is used in a manner commonly associated with known patterns of fraud patterns. For example:
    (i) The customer fails to make the first payment or makes an initial payment but no subsequent payments.
c. An account is used in a manner that is not consistent with established patterns of activity on the account. There is, for example:
    (i) Nonpayment when there is no history of late or missed payments;
    (ii) A material change in purchasing or spending patterns;
d. An account that has been inactive for a long period of time is used *(taking into consideration the type of account, the expected pattern of usage and other\ relevant factors)*.
e. Mail sent to the customer is returned repeatedly as undeliverable although transactions continue to be conducted in connection with the customer's account.
f. The City is notified that the customer is not receiving paper account statements.
g. The City is notified of unauthorized charges or transactions in connection with a customer's account.
h. The City is notified by a customer, law enforcement or another person that it has opened a fraudulent account for a person engaged in identity theft.

5. Notice from customers, law enforcement, victims or other reliable sources regarding possible identity theft or phishing relating to covered accounts

SECTION 7-909 PREVENTION AND MITIGATION OF IDENTITY THEFT.

1. In the event that any City employee responsible for or involved in restoring an existing covered account or accepting payment for a covered account becomes aware of red flags indicating possible identity theft with respect to existing covered accounts, such employee shall use his or her discretion to determine whether such red flag or combination of red flags suggests a threat of identity theft. If, in his or her discretion, such employee determines that identity theft or attempted identity theft is likely or probable, such employee shall immediately report such red flags to their supervisor. If, in his or her discretion, such employee deems that identity theft is unlikely or that reliable information is available to reconcile red flags, the employee shall convey this information to their supervisor, who may in his or her discretion determine that no further action is necessary. If the supervisor in his or her discretion determines that further action is necessary, a city employee shall perform one or more of the following responses, as determined to be appropriate by the supervisor:

a. Contact the customer;
b. Make the following changes to the account if, after contacting the customer, it is apparent that someone other than the customer has accessed the customer's covered account:
   (i) change any account numbers, passwords, security codes, or other security devices that permit access to an account; or
   (ii) close the account;
c. Cease attempts to collect additional charges from the customer and decline to sell the customer's account to a debt collector in the event that the customer's account has been accessed without authorization and such access has caused additional charges to accrue;
d. Notify a debt collector within *36 hours* of the discovery of likely or probable identity theft relating to a customer account that has been sold to such debt collector in the event that a customer's account has been sold to a debt collector prior to the discovery of the likelihood or probability of identity theft relating to such account;
e. Notify law enforcement, in the event that someone other than the customer has accessed the customer's account causing additional charges to accrue or accessing personal identifying information; or
f. Take other appropriate action to prevent or mitigate identity theft.

2. In the event that any City employee responsible for or involved in opening a new covered account becomes aware of red flags indicating possible identity theft with respect an application for a new account, such employee shall use his or her discretion to determine whether such red flag or combination of red flags suggests a threat of identity theft. If, in his or her discretion, such employee determines that identity theft or attempted identity theft is likely or probable, such employee shall immediately report
such red flags to their supervisor. If, in his or her discretion, such employee deems that identity theft is unlikely or that reliable information is available to reconcile red flags, the employee shall convey this information to their supervisor, who may in his or her discretion determine that no further action is necessary. If the supervisor in his or her discretion determines that further action is necessary, a city employee shall perform one or more of the following responses, as determined to be appropriate by the supervisor:

a. Request additional identifying information from the applicant;
b. Deny the application for the new account;
c. Notify law enforcement of possible identity theft; or
d. Take other appropriate action to prevent or mitigate identity theft.

SECTION 7-910 UPDATING THE PROGRAM.

The City Council shall annually review and, as deemed necessary by the council, update the Identity Theft Prevention Program along with any relevant red flags in order to reflect changes in risks to customers or to the safety and soundness of the City and its

covered accounts from identity theft. In so doing, the City Council shall consider the following factors and exercise its discretion in amending the program:

a. The City's experiences with identity theft;
b. Updates in methods of identity theft;
c. Updates in customary methods used to detect, prevent, and mitigate identity theft;
d. Updates in the types of accounts that the city offers or maintains; and
e. Updates in service provider arrangements.

SECTION 7-911 PROGRAM ADMINISTRATION.

The Department supervisor is responsible for oversight of the program and for program implementation. The City Manager is responsible for reviewing reports prepared by staff regarding compliance with red flag requirements and with recommending material changes to the program, as necessary in the opinion of the City Manager, to address changing identity theft risks and to identify new or discontinued types of covered accounts. Any recommended material changes to the program shall be submitted to the City Council for consideration by the Council.

1. The department supervisor will report to the City Manager at least annually, in compliance with the red flag requirements. The report will address material matters related to the program and evaluate issues such as:

a. The effectiveness of the policies and procedures of city in addressing the risk of identity theft in connection with the opening of covered accounts and with respect to existing covered accounts;
b. Service provider arrangements;
c. Significant incidents involving identity theft and management's response; and
d. Recommendations for material changes to the Program.

2. The department supervisor is responsible for providing training to all employees responsible for or involved in opening a new covered account, restoring an existing covered account or accepting payment for a covered account with respect to the implementation and requirements of the Identity Theft Prevention Program. The department supervisor shall exercise his or her discretion in determining the amount and substance of training necessary.

SECTION 7-912 OUTSIDE SERVICE PROVIDERS.

In the event that the City engages a service provider to perform an activity in connection with one or more covered accounts the department supervisor shall exercise his or her discretion in reviewing such arrangements in order to ensure, to the best of his or her ability, that the service provider's activities are conducted in accordance with policies and procedures, agreed upon by contract, that are designed to detect any red flags that may arise in the performance of the service provider's activities and take appropriate steps to prevent or mitigate identity theft."

ARTICLE 2

TREATMENT OF ADDRESS DISCREPANCIES

SECTION 7-913 SHORT TITLE.

This Article II shall be known as Treatment of Address Discrepancies.

SECTION 7-914 PURPOSE.

Pursuant to 16 CFR § 681.1, the purpose of this Article is to establish a process by which the City will be able to form a reasonable belief that a consumer report relates to the consumer about whom it has requested a consumer credit report when the City has received a notice of address discrepancy.

SECTION 7-915 DEFINITIONS.

For purposes of this article, the following definitions apply:

(1) 'Notice of address discrepancy' means a notice sent to a user by a consumer reporting agency pursuant to 15 U.S.C. § 1681(c)(h)(1), that informs the user of a substantial difference between the address for the consumer that the user provided to request the consumer report and the address(es) in the agency's file for the consumer.[2]

(2) 'City' means City of Piedmont Oklahoma.

SECTION 7-916 POLICY.

In the event that the City receives a notice of address discrepancy, the City employee responsible for verifying consumer addresses for the purpose of providing the municipal service or account sought by the consumer shall perform one or more of the following activities, as determined to be appropriate by such employee:

1. Compare the information in the consumer report with:

    a. Information the city obtains and uses to verify a consumer's identity in accordance with the requirements of the Customer Information Program rules implementing 31 U.S.C. § 5318(l);
    b. Information the city maintains in its own records, such as applications for service, change of address notices, other customer account records or tax records; or
    c. Information the city obtains from third-party sources that are deemed reliable by the relevant city employee; or

2. Verify the information in the consumer report with the consumer.

[2] See 16 CFR § 681.1(b).

SECTION 7-917 FURNISHING CONSCUMER'S ADDRESS TO CONSUMER REPORTING AGENCY.

1. In the event that the City reasonably confirms that an address provided by a consumer to the City is accurate, the City is required to provide such address to the consumer reporting agency from which the City received a notice of address discrepancy with respect to such consumer. This information is required to be provided to the consumer reporting agency when:

a. The City is able to form a reasonable belief that the consumer report relates to the consumer about whom the city requested the report;
b. The City establishes a continuing relation with the consumer; and
c. The City regularly and in the ordinary course of business provides information to the consumer reporting agency from which it received the notice of address discrepancy.

2. Such information shall be provided to the consumer reporting agency as part of the information regularly provided by the City to such agency for the reporting period in which the City establishes a relationship with the customer.

SECTION 7-918 METHODS OF CONFIRMING CONSUMER ADDRESSES.

The City employee charged with confirming consumer addresses may, in his or her discretion, confirm the accuracy of an address through one or more of the following methods:

(1) Verifying the address with the consumer;
(2) Reviewing the city's records to verify the consumer's address;
(3) Verifying the address through third party sources; or
(4) Using other reasonable processes.

(This page intentionally left blank)

PART 8

HEALTH AND NUISANCES

CHAPTER 1

NUISANCES AND HEALTH GENERALLY

Section 8-101	Definitions.
Section 8-102	Certain public nuisances defined.
Section 8-103	Nuisance prohibited.
Section 8-104	Person responsible for continuing nuisance.
Section 8-105	Time does not legalize nuisance.
Section 8-106	Remedies against public nuisances.
Section 8-107	Remedies against private nuisances.
Section 8-108	City has power to define and summarily abate nuisance.
Section 8-109	Summary abatement of nuisances.
Section 8-110	Health nuisances; abatement.
Section 8-111	City actions not to jeopardize private action.
Section 8-112	Unauthorized dumping, depositing or disposal of trash on property of another.
Section 8-113	Open burning prohibited.
Section 8-114	Abatement by suit in district court.
Section 8-115	Procedure cumulative.
Section 8-116	Toilet facilities required.
Section 8-117	Obstructing health or enforcement officer.
Section 8-118	Abandoned ice boxes, refrigerators.
Section 8-119	Littering prohibited generally.
Section 8-120	Enforcement, citations, appeals.

CHAPTER 2

WEEDS, GRASS AND TRASH

Section 8-201	Definitions.
Section 8-202	Accumulation of trash or weeds unlawful.
Section 8-203	Duty of owner, occupant to maintain private property.
Section 8-204	Reports of accumulation of grass, weeds or trash on property.
Section 8-205	Cleaning and mowing, notice, consent, hearing, abatement, lien and payment.

CHAPTER 3

DILAPIDATED BUILDINGS

Section 8-301	Definitions.
Section 8-302	Report to be made.
Section 8-303	Condemnation, boarding and securing of dilapidated buildings, notice, removal, lien, payment.
Section 8-304	Clearing up of premises from which buildings have been removed.
Section 8-305	Penalty.

CHAPTER 4

ABANDONED, JUNK VEHICLES

Section 8-401	Definitions.
Section 8-402	Prohibited acts; nuisances declared; exceptions.
Section 8-403	Presumption of junk vehicles.
Section 8-404	Responsibility for removal from public property.
Section 8-405	Notice to remove from private property.
Section 8-406	Hearing.
Section 8-407	Removal of motor vehicles from property.
Section 8-408	Notice of removal.
Section 8-409	Redemption of impounded vehicles or motor vehicles.
Section 8-410	Collection of City's costs of removal.
Section 8-411	Penalty; continuing violations.

CHAPTER 5

FOOD AND MILK REGULATIONS

ARTICLE A
FOOD SERVICE SANITATION

Section 8-501	Regulations adopted.

ARTICLE B
MILK AND MILK PRODUCTS

Section 8-521	Regulations adopted.
Section 8-522	Penalty.

CHAPTER 6

RULES FOR STORAGE AND PARKING OF COMMERCIALVEHICLES, RECREATIONAL VEHICLES AND TRAILERS DECLARING A NUISANCE FOR PARKING IN VIOLATION OF THIS

Section 8-601	Definitions.
Section 8-602	Parking of certain vehicles restricted.
Section 8-603	Certain vehicles prohibited; nuisances declared.
Section 8-604	Commercial motor vehicles and equipment.
Section 8-605.	Recreational vehicles, cargo, utility, stock or boat trailers and boats.

CHAPTER 7

REGULATION OF SOUND

Section 8-701	Title.
Section 8-702	Applicability.
Section 8-703	Scope.
Section 8-704	Definitions.
Section 8-705	Measurement standards.
Section 8-706	Maximum permissible sound levels by receiving use.
Section 8-707	Method of sound level measurement.
Section 8-708	Exempt noises.
Section 8-709	Special permits to exceed noise levels.
Section 8-710	Enforcement responsibility
Section 8-711	Violations; penalty.

CHAPTER 1

NUISANCES AND HEALTH GENERALLY

Section 8-101	Definitions.
Section 8-102	Certain public nuisances defined.
Section 8-103	Nuisance prohibited.
Section 8-104	Person responsible for continuing nuisance.
Section 8-105	Time does not legalize nuisance.
Section 8-106	Remedies against public nuisances.
Section 8-107	Remedies against private nuisances.
Section 8-108	City has power to define and summarily abate nuisance.
Section 8-109	Summary abatement of nuisances.
Section 8-110	Health nuisances; abatement.
Section 8-111	City actions not to jeopardize private action.
Section 8-112	Unauthorized dumping, depositing or disposal of trash on property of another.
Section 8-113	Open burning prohibited.
Section 8-114	Abatement by suit in district court.
Section 8-115	Procedure cumulative.
Section 8-116	Toilet facilities required.
Section 8-117	Obstructing health or enforcement officer.
Section 8-118	Abandoned ice boxes, refrigerators.
Section 8-119	Littering prohibited generally.
Section 8-120	Enforcement, citations, appeals.

SECTION 8-101 DEFINITIONS.

As used in this chapter, the following terms shall have the meanings respectively ascribed to them herein:

1. "Nuisance" means unlawfully doing an act, or omitting to perform a duty, or is any thing or condition which either:

   a. Annoys, injures or endangers the comfort, repose, health or safety of others;

   b. Offends decency;

   c. Unlawfully interferes with, obstructs or tends to obstruct or render dangerous for passage, any lake or navigable river, stream, canal or basin, or any public park, square, street or other public property; or

   d. In any way renders other persons insecure in life or in the use of property;

2. "Private nuisance" means every nuisance not included in paragraph 3 of this section; and

3. "Public nuisance" means a nuisance which affects at the same time an entire community or neighborhood, or any considerable number of persons, or three (3) or more properties under separate ownership in the vicinity of such nuisance, although the extent of the annoyance or damage inflicted upon the individuals may be unequal. (Prior Code, Secs. 12-121,

13-1)

State Law References: Nuisances generally, see Title 50 O.S. Secs. 1 et seq.; power of city to summarily abate, 50 O.S. Sec. 16.

Cross Reference: Animals, Secs. 4-101 et seq.; Buildings, Secs. 5-101 et seq; Food and milk regulations, Secs. 8-401 et seq.

SECTION 8-102 CERTAIN PUBLIC NUISANCES DEFINED.

A. In addition to other public nuisances declared by other sections of this code or law, the following are hereby declared to be public nuisances:

1. The sale or offering for sale of unwholesome food or drink; or the keeping of a place where such sales or offerings are made;

2. The sale, offering for sale or furnishing of intoxicating liquor in violation of the state law or ordinances of the city; or the keeping of a place where intoxicating liquor is sold, offered for sale, or furnished in violation of the state law or ordinances of the city;

3. The exposure, display, sale or distribution of obscene pictures, books, pamphlets, magazines, papers, documents, or objects; or the keeping of a place where such are exposed, displayed, sold or distributed;

4. The keeping of a place where persons gamble, whether by cards, slot machines, punchboards or otherwise;

5. The keeping of a place where prostitution, illicit sexual intercourse or other immoral acts are practiced;

6. The keeping of a place where activities in violation of state law or ordinance are practiced or carried on;

7. The public exposure of a person having a contagious disease;

8. The continued making of loud or unusual noises, music or sounds, or strong vibrations which annoy persons of ordinary sensibilities; or the keeping of an animal which makes such noises;

9. The operation or use of any electrical apparatus or machine which materially and unduly interferes with radio or television reception by others;

10. Any use of a street or sidewalk or a place adjacent thereto which causes crowds of people to gather so as to obstruct traffic on such street or sidewalk, or which otherwise obstructs traffic thereon, except as may be authorized by law or ordinances;

11. Permitting water or other liquid to flow or fall, or ice or snow to fall, from any building or structure upon any street or sidewalk where mosquitoes breed or are likely to breed, or which are so constructed, formed, conditioned, or situated as to endanger the public safety;

12. All wells, pools, cisterns, bodies or containers of water in which mosquitoes breed or are likely to breed, or which are so constructed, formed, conditioned or situated as to endanger the public safety;

13. Rank weeds or grass, carcasses, accumulations of manure, refuse or other things which are, or are likely to be, breeding places for flies, mosquitoes, vermin or disease germs, and the premises on which such exist;

14. Any building or structure which is dangerous to the public health or safety because of damage, decay or other condition;

15. Any pit, hole or other thing which is so constructed, formed, conditioned or situated as to endanger the public safety;

16. Any fire or explosion hazard which endangers the public safety;

17. Any occupation or activity which endangers the public peace, health, morals, safety or welfare;

18. Permitting bagworms to be upon any trees or other plants within the city;

19. Permitting foul, noxious or offensive odors to escape from premises; or unusual quantities of dust or other deleterious substances to escape or emanate across the property line upon which the same originates;

20. Any stable or other place where animals are kept that may become obnoxious or annoying to any resident of this city, by reason of any noise or noises made by the animal therein, or by reason of lack of sanitation;

21. The keeping in violation of Sections 4-101 et seq. of any dog kennels within this city for the breeding and raising of dogs that shall become offensive or annoying to the public by reason of the barking and noise made by the animals therein contained;

22. Any vault, cesspool or sink used to receive human excrement, slops, garbage, refuse or other filthy substance;

23. Any pond, slop, trash, refuse, cobs, manure, decayed or decaying vegetable matter, left, kept or maintained in such condition as to endanger the public health;

24. The keeping of any hog pen within the limits of this city in violation of this code;

25. Every privy or water closet which shall be in an overflowing, leaking or filthy condition, or in a condition dangerous, injurious or annoying to the comfort, health and welfare of any resident of this city;

26. Any green or unsalted hides of any animal kept in any exposed or open place within the limits of this city;

27. Any unclean, foul, leaking or broken or defective ditch, drain, gutter, slop, garbage or manure barrel, box or other receptacle in this city;

28. Every building or other structure that shall become unsafe and dangerous from fire, decay or other cause, or shall become hazardous from fire, by reason of age, decay or construction, location or other cause, or shall be detrimental to the health, safety or welfare of this city or its inhabitants from any cause; and

29. Any violations of the rules and regulations governing Residential Sewage Disposal as adopted by the State Department of Environmental Quality, Bulletin 600, or latest version.

B. The enumeration in Subsection A hereof of certain public nuisances shall be cumulative and not limit other provisions of law or ordinances defining public or private nuisances either in more general or more specific terms. (Prior Code, Sec. 13-7, in part)

SECTION 8-103 NUISANCE PROHIBITED.

No person shall create or maintain a nuisance within the city or permit a nuisance to remain on premises under his control within the city. (Prior Code, Sec. 13-10)

SECTION 8-104 PERSON RESPONSIBLE FOR CONTINUING NUISANCE.

Every successive owner of property who neglects to abate a continuing nuisance upon or in the use of such property, created by a former owner, is liable therefor in the same manner as the person who first created it. (Prior Code, Sec. 13-2)

SECTION 8-105 TIME DOES NOT LEGALIZE NUISANCE.

No lapse of time can legalize a public nuisance amounting to an actual obstruction of public right. (Prior Code, Sec. 13-3)

SECTION 8-106 REMEDIES AGAINST PUBLIC NUISANCES.

The remedies against a public nuisance are:

1. Prosecution on complaint before the municipal court;

2. Prosecution on information or indictment before another appropriate court;

3. Civil action; or

4. Abatement;

   a. By the person injured as provided in Section 12 of Title 50 of the Oklahoma Statutes; or

   b. By the city in accordance with law or ordinance.

(Prior Code, Sec. 13-4)

SECTION 8-107 REMEDIES AGAINST PRIVATE NUISANCES.

The remedies against a private nuisance are:

1. Civil action; or

2. Abatement:

   a. By the person injured as provided in Sections 14 and 15 of Title 50 of the Oklahoma Statutes; or

   b. By the city in accordance with law or ordinance.

(Prior Code, Sec. 13-5)

SECTION 8-108 CITY HAS POWER TO DEFINE AND SUMMARILY ABATE NUISANCE.

As provided in Section 16 of Title 50 of the Oklahoma Statutes, the city is empowered to determine what is and what shall constitute a nuisance within its corporate limits and, for the protection of the public health, the public parks and the public water supply, outside of its corporate limits. Whenever it is practical to do so, the city has the power summarily to abate any such nuisance after notice to the owner and an opportunity for him to be heard, if this can be done. (Prior Code, Sec. 13-6)

SECTION 8-109 SUMMARY ABATEMENT OF NUISANCES.

A. Some nuisances are of such nature as to constitute a grave and immediate danger to the peace, health, safety, morals or welfare of one or more persons or of the public generally. It is recognized that circumstances may be such as to justify, and even to require, the city administrator or other appropriate officer or agency of the city government to take immediate and proper action summarily to abate such nuisances or to reduce or suspend the danger until more deliberate action can be taken toward such abatement.

B. An officer subordinate to the city administrator may submit to the city administrator a statement as to the existence of a nuisance as defined by the ordinances of the city or law, and a request or recommendation that it be abated.

C. The city administrator or his designee shall determine if a nuisance exists as defined by the ordinances of the city or law. If he finds that a nuisance does in fact exist, he shall direct the owner or other persons responsible for or causing the nuisance by:

1. Certified mail; or

2. By publication if the owner cannot be so served or found,

to abate the nuisance within a specified time if the peace, health, safety, morals or welfare of the person or persons or public adversely affected would not be unduly jeopardized by the consequent delay. If such peace, health, safety, morals or welfare would be unduly jeopardized by the consequent delay, or if the owner or other persons responsible for or causing the nuisance do not abate it within the specified time, or if the persons responsible authorize the city to abate the nuisance, the administrator shall direct the appropriate officer to abate the nuisance or have it abated, if summary abatement is practical, as authorized by Section 16 of Title 50 of the Oklahoma Statutes. The city shall send a statement of the cost of such summary abatement to the owner or other persons responsible for or causing the nuisance, as may be just under the circumstances, if

their names and addresses are known. Until paid, such cost shall constitute a debt to the city collectible as other debts may be collected.

D. The determination of the existence of a nuisance and order to abate it, as made by the city administrator, may be appealed by the occupant or owner or person causing the nuisance by filing a request for hearing in writing with the city clerk within the period of time specified in the notice for abatement of the nuisance. The clerk shall cause the matter to be placed on the agenda of the city council for final determination with appropriate notice of the hearing provided to the person requesting the appeal. (Prior Code, Sec. 13-8, in part)

SECTION 8-110 HEALTH NUISANCES; ABATEMENT.

A. Pursuant to authority granted by Section 1-1011 of Title 63 of the Oklahoma Statutes, the city shall have the authority to order the owner or occupant of any private premises in the city to remove from such premises, at his own expense, any source of filth, cause of sickness, condition conducive to the breeding of insects or rodents that might contribute to the transmission of disease, or any other condition adversely affecting the public health, within twenty-four (24) hours, or within such other time as may be reasonable. Such order shall be in writing and may be served personally on the owner or occupant of the premises, or authorized agent thereof, by the city or by a police officer, or a copy thereof may be left at the last usual place of abode of the owner, occupant or agent, if known and within the state. If the premises are unoccupied and the residence of the owner, occupant or agent is unknown or is outside the state, the order may be served by posting a copy thereof on the premises or by publication in at least one issue of a newspaper having a general circulation in the city.

B. If the order is not complied with, the city may cause the order to be executed and complied with, and the cost thereof shall be certified and the cost of removing or abating such nuisance shall be charged to the owner or occupant, enforceable as a lien or any other method allowed by law or ordinance. (Prior Code, Sec. 13-21)

SECTION 8-111 CITY ACTIONS NOT TO JEOPARDIZE PRIVATE ACTION.

Nothing herein contained shall be construed to abridge the rights of citizens of the city to bring and maintain actions in the proper courts for the abatement of private nuisances or those specially injurious to them.

SECTION 8-112 UNAUTHORIZED DUMPING, DEPOSITING OR DISPOSAL OF TRASH ON PROPERTY OF ANOTHER.

A. It is unlawful to place, deposit, or leave any trash, debris, refuse or garbage on the property of another or on public property, including any public street, easement, sidewalk or other public property, except where such disposal is expressly allowed by law.

B. It is unlawful for any person to place, deposit, leave or dispose of trash, garbage, refuse or debris in any dumpster or trash receptacle that is located on the property of another without the express consent of the person on whose property the dumpster or trash receptacle is located. (Prior Code, Secs. 13-23 to 13-25).

SECTION 8-113 OPEN BURNING PROHIBITED.

It is unlawful to burn any fire outside of any enclosed building in the city for the purpose

of burning grass, trash, leaves, woods, papers, refuse, garbage or any other substance except in an approved incinerator and except as may be allowed by the city fire code and any applicable state or city regulations.

Anyone found to be in violation of this ordinance is subject to criminal citation and shall be responsible for any and all damages resulting there from, including the hourly cost per apparatus for suppression of such illegal burning. The minimum cost per hour per apparatus is $150.00 but may be increased as determined by the Fire Chief.

Anyone found to be in violation of this ordinance shall be liable for any and all costs related to any injury or injuries sustained by any firefighter in suppressing such illegal burning.

Cross Reference: Fire code, See Section 5-601 of this code on open burning amendments to the fire code.

SECTION 8-114 ABATEMENT BY SUIT IN DISTRICT COURT.

In cases where it is deemed impractical summarily to abate a nuisance, the city may bring suit in the district court. (Prior Code, Sec. 13-9, in part)

SECTION 8-115 PROCEDURE CUMULATIVE.

The procedures for abating nuisances prescribed by this chapter and by other provisions of law and ordinance shall be cumulative one to the other. The city may elect to follow any such procedure which is applicable in abating any particular nuisance. (Prior Code, Sec. 13-22)

SECTION 8-116 TOILET FACILITIES REQUIRED.

A. For the purposes of this section, the following terms shall have the meanings respectively ascribed to them herein:

1. "Human excrement" means the bowel and kidney discharge of human beings;

2. "Sanitary water closet" means the flush type toilet which is connected with a sanitary sewer line of such capacity and construction as to carry away the contents at all times; and

3. "Sanitary pit privy" means a privy which is built, rebuilt or constructed so as to conform with the specifications approved by the state health department.

B. Every owner of a residence or other building in which humans reside, are employed or congregate within this city shall install, equip and maintain adequate sanitary facilities for the disposal of human excrements by use of a sanitary water closet or a sanitary pit privy. The closets and toilets hereby required shall be of the sanitary water closet type when located within three hundred (300) feet of a sanitary sewer and accessible thereto and of the sanitary water closet type (notwithstanding a greater distance from a sanitary sewer) or the water closet type emptying into a septic tank system or the pit privy type. A septic tank system or a pit

privy may be used in such cases only if it meets the standards of and is approved by the state health department.

C. All human excrement disposed of within this city shall be disposed of by depositing it in closets and privies of the type provided for in this section. It is unlawful for any owner of property within the city to permit the disposal of human excrement thereon in any other manner, or for any person to dispose of human excrement within the city in any other manner.

D. All privies shall be kept clean and sanitary at all times, and the covers of the seat of privies shall be kept closed at all times when the privies are not being used. No wash water, kitchen slop or anything other than human excrement and toilet paper shall be emptied into a privy. No excrement from any person suffering from typhoid fever, dysentery or other serious bowel disease shall be deposited in any sanitary pit privy or sanitary water closet until it is disinfected in such a manner as may be prescribed by the health officer.

E. All facilities for the disposal of human excrement in a manner different from that required by this section and all privies and closets so constructed, situated or maintained as to endanger the public health are hereby declared to be public nuisances, and may be dealt with and abated as such. Any person maintaining any such nuisance is guilty of an offense and each day upon which any such nuisance continues is a separate offense.

F. No residence, business or commercial building, nor any other premises in the city, if located within three hundred (300) feet of any public sewer later or main shall be connected to or in any manner served by septic tank; no such person shall allow the installation, maintenance, operation or use of any septic tank in violation of this section. (Prior Code, Secs. 11-1 to 11-9)

SECTION 8-117 OBSTRUCTING HEALTH OR ENFORCEMENT OFFICER.

It is unlawful for any person to willfully obstruct or interfere with any health officer or other code enforcement officer charged with the enforcement of the health or nuisance law of this city.

SECTION 8-118 ABANDONED ICE BOXES, REFRIGERATORS.

It is unlawful and an offense for any person to leave outside of any building or dwelling in a place accessible to children any abandoned, unattended or discarded ice box, refrigerator or other container of any kind of a capacity of one and one-half (1 1/2) cubic feet or more which has an airtight door or lock which may not be released from the inside of such ice box, refrigerator or container, or which has a snap-lock or other device for automatically fastening such door in a closed position, without first removing such fastener, lock, snap-lock or doors of such container. (Prior. Code, Sec. 11-29)

SECTION 8-119 LITTERING PROHIBITED GENERALLY.

No person shall throw, place, leave, drop, put or otherwise abandon litter upon any public property, private property or roadway except as otherwise specifically permitted in this code. "Litter" means trash, refuse, rubbish and all like material.

SECTION 8-120 ENFORCEMENT, CITATIONS, APPEALS.

A. The city administrator is designated as the administrative officer to perform the duties of the city council with respect to public nuisance abatement. The city administrator may further delegate to the director of community development division or his staff the aforementioned duties of the city administrator, including the duty of administrative officer.

B. The city administrator or his designee are designated to issue citations for violations this part 8, including nuisances, weeds and trash, abandoned vehicles and health laws.

C. Any administrative hearing for violations of the above-referenced sections shall be before an administrative officer designated by the city administrator. A hearing shall be scheduled on completion and filing with the city clerk an application therefor, pursuant to the appropriate sections of thispart, in accordance with the provisions contained therein.

D. Appeals from the decisions of the administrative officer shall be to the municipal court, in accordance with the applicable code provisions.

(This page intentionally left blank)

CHAPTER 2

WEEDS, GRASS AND TRASH

Section 8-201 Definitions.
Section 8-202 Accumulation of trash or weeds unlawful.
Section 8-203 Duty of owner, occupant to maintain private property.
Section 8-204 Reports of accumulation of grass, weeds or trash on property.
Section 8-205 Cleaning and mowing, notice, consent, hearing, abatement, lien and payment.

SECTION 8-201 DEFINITIONS.

As used in this chapter, the following terms shall have the meanings respectively ascribed to them in this section:

1. "Administrative officer" means the city administrator or the person so designated by the city administrator; Section 8-120 of this code;

2. "Cleaning" means the removal of trash from property;

3. "Owner" means the owner of record as shown by the most current tax rolls of the county treasurer;

4. "Trash" means any refuse, litter, ashes, leaves, debris, paper, combustible materials, rubbish, offal, waste, or matter of any kind or form which is uncared for, discarded or abandoned; and

5. "Weed" includes but is not limited to poison ivy, poison oak or poison sumac and all vegetation at any stage of maturity which:

   a. Exceeds twelve (12) inches in height, except healthy trees, shrubs or produce for human consumption or grown in a tended and cultivated garden unless such trees and shrubbery by their density or location constitute a detriment to the health, benefit and welfare of the public and community or a hazard to traffic or create a fire hazard to the property or otherwise interfere with the mowing of the weeds;

   b. Regardless of height, harbors, conceals or invites deposits or accumulation of refuse or trash;

   c. Harbors rodents or vermin;

   d. Gives off unpleasant or noxious odors;

   e. Constitutes a fire or traffic hazard; or

   f. Is dead or diseased.

The term "weed" does not include tended crops on land zoned for agricultural use which are planted more than one hundred fifty (150) feet from a parcel zoned for other than agricultural use.

(Ord. No. 266, 8/22/88)

SECTION 8-202 ACCUMULATION OF TRASH OR WEEDS UNLAWFUL.

A. It is unlawful for any owner or occupant of any lot, tract or parcel of land situated wholly or in part within the corporate limits of the city to allow trash or weeds to grow, stand or accumulate upon such premises. It is the duty of such owner or occupant to remove or destroy any such trash or weeds.

B. No owner or occupant of land or lots shall

1. Knowingly permit the throwing or dumping upon his premises of any refuse, rubbish or trash, or

2. Permit such materials to remain on his premises for more than ten (10) days after being notified to remove them by the city or the county health department whether or not the owner or occupant knew of or permitted such throwing or depositing.

In addition to a penalty for violation of this section or Section 8-203, the city may abate as a public nuisance any condition prohibited herein pursuant to this chapter, any other law or ordinance, all of which shall be cumulative. (New)

State Law Reference: Cleaning, mowing property, municipal powers, 11 O.S. Sec. 22-110.

SECTION 8-203 DUTY OF OWNER, OCCUPANT TO MAINTAIN PRIVATE PROPERTY.

No person owning, leasing, occupying or having charge of any private property or premises shall maintain or keep any refuse, rubbish, trash or similar material except dirt thereon; nor shall such person allow the accumulation of any such material; nor shall any such person keep or maintain such premises in a manner causing substantial diminution in the value of other property in the neighborhood in which the premises are located. No prosecution may be undertaken under this section until such person shall have been given ten (10) days' notice by the city of the condition and an order to fully abate the alleged deficiency. (New)

Cross Reference: See also Section 8-510 and 8-511 of this code for similar provisions on accumulations of litter on private property.

SECTION 8-204 REPORTS OF ACCUMULATION OF GRASS, WEEDS OR TRASH ON PROPERTY.

Any officer or employee of the city who discovers an accumulation of trash or the growth of grass and weeds, or both these conditions, upon any premises within the limits of the city, shall report the condition to the administrative officer if, as a result of the accumulation or growth, the premises appear to be:

1. Detrimental to the health, benefit and welfare of the public and the community;

2. A hazard to traffic;

3. A fire hazard to property; or

4. Any two (2) or more of these conditions.

(Ord. No. 266, 8/22/88)

State Law Reference: Cleaning and mowing of property, procedures and powers 11 O.S. Sec. 22-111.

SECTION 8-205 CLEANING AND MOWING, NOTICE, CONSENT, HEARING, ABATEMENT, LIEN AND PAYMENT.

The city administrator is authorized to cause property within the city to be cleaned of trash and weeds, or grass to be cut or mowed, and the nuisance to be abated in accordance with the following procedure:

1. The city administrator or his designee may determine whether the accumulation of trash, growth of weeds or grass, or other nuisances has caused the property to become detrimental to the health, benefit or welfare of the public and the community or a hazard to traffic, or creates a fire hazard to the danger of the property;

2. At least ten (10) days' notice shall be given to the owner of the property by mail at the address shown by the current year's tax rolls in the county treasurer's office before the hearing provided for herein or before action may be taken. The notice shall order the property owner to clean the property of trash, or to cut or mow the weeds or grass on the property, as appropriate, and the notice shall state that unless the work is performed within ten (10) days of the date of the notice, the work shall be done by the city and a notice of lien shall be filed with the county clerk against the property for the costs due and owing the city;

3. At the time of mailing of notice to the property owner, the city shall obtain a receipt of mailing from the postal service, which receipt shall indicate the date of mailing and the name and address of the mailee. However, if the property owner can not be located within ten (10) days from the date of mailing the same, notice may be given by posting a copy of the notice on the property or by publication, as provided by Section 102.8 of Title 11 of the Oklahoma Statues, one time not less than ten (10) days prior to any hearing or action;

4. If the city anticipates summary abatement of a nuisance in accordance with the provisions as herein provided, the notice, whether by mail or publication, shall state: that any accumulations of trash or excessive weeds or grass growth on the owner's property occurring within six (6) months after the removal of trash or cutting or mowing of weds or grass on the property pursuant to the notice may be summarily abated by the city; that the costs of such abatement shall be assessed against the owner; and that a lien shall be imposed on the property to secure such payment, all without further notice to the property owner. At the time of each summary abatement the city clerk shall notify the property owner of the abatement and costs thereof. The notice shall state that the property owner may request a hearing within ten (10) days after the date of mailing the notice. Unless otherwise determined at the hearing, the cost of such abatement shall be determined and collected as provided in this section. However, these summary abatement procedures shall not apply if the records of the county clerk show that the property was transferred after the notice was given pursuant to this section;

5. The owner of the property may give his written consent to the city authorizing the removal of the trash or the mowing of the weeds or grass. By giving his written consent, the owner waives his right to a hearing by the city;

6. A hearing may be held by the administrative officer to determine whether the accumulation of trash or the growth of weeds or grass has caused the property to become detrimental to the health, benefit or welfare of the public and the community or a hazard to traffic or creates a fire hazard to the danger of property. The property owner shall have a right of appeal to the city administrator, except that if the city administrator conducts the initial hearing, then the right of appeal is to the city council. The appeal shall be taken by filing written notice of appeal with the city clerk within ten (10) days after the administrative order is rendered.

7. If the administrative officer finds the condition of the property constitutes a detriment or hazard and that the property would be benefited by the removal or such conditions, the administrative officer shall direct the clearing or cleaning be done by one of the following methods:

a. By the city, provided the actual cost of the labor, maintenance and equipment required does not exceed Five Hundred Dollars ($500.00); or

b. On a private contract basis, in which case it shall be awarded to the lowest and best bidder;

The agents of the city are granted the right of entry on the property for the removal of trash, mowing of weeds or grass, cleaning and performance of necessary duties as a governmental function of the city. Immediately following the cleaning or mowing of the property, the city clerk shall file a notice of lien with the county clerk describing the property and the work performed by the city, and stating that the city claims a lien on the property for the cleaning and mowing costs, and that such costs are the personal obligation of the property owner from and after the date of filing of the notice;

8. After the property has been cleaned, the administrative officer shall determine the actual cost of such cleaning and any other expenses as may be necessary in connection therewith, including the cost of the notice and mailing. The city clerk shall forward by mail to the property owner specified in this section a statement of the actual cost and demanding payment;

9. If payment is not made within thirty (30) days from the date of the mailing of the statement, the city clerk shall forward a certified statement of the amount of the cost to the county treasurer of the county in which the property is located, and the same shall be levied on the property and collected by the county treasurer as other taxes authorized by law. The cost and the interest thereon shall be a lien against the property from the date the cost is certified to the county treasurer and shall continue until the cost shall be fully paid;

10. At any time prior to the collection as provided herein the city may pursue any civil remedy for collection of the amount owing and the interest thereon. Upon receiving payment, if any, the city clerk shall forward to the county treasurer a notice of such payment and directing discharge of the lien or part thereof; and

11. The provisions of this section shall not apply to any property used for agricultural purposes.

(Prior Code, Sec.13-11; Ord. No. 266, 8/22/88)

CHAPTER 3

DILAPIDATED BUILDINGS

Section 8-301	Definitions.
Section 8-302	Report to be made.
Section 8-303	Condemnation, boarding and securing of dilapidated buildings, notice, removal, lien, payment.
Section 8-304	Clearing up of premises from which buildings have been removed.
Section 8-305	Penalty.

SECTION 8-301 DEFINITIONS.

For the purposes of this chapter:

1. "Administrative officer" means the city administrator or his designee;

2. "Boarding and securing" or "boarded and secured" means the closing, boarding or locking of any or all exterior openings so as to prevent entry into the structure;

3. "Cleaning" or "cleaned" means the removal of trash or weeds from the premises;

4. "Dilapidated building" means the neglect of necessary repairs to a building or allowing it to fall into a state of decay or allowing it to fall into partial ruin to such an extent that the building is a hazard to the health or safety or welfare of the general public; and

5. "Unsecured building" means a structure which through neglect or injury lacks necessary repairs or otherwise is in a state of decay or partial ruin to such an extent that the structure is a hazard to the health, safety or welfare of the general public.

(Ord. No. 266, 8/22/88)

State Law Reference: Similar provisions, Section 22-112, 22-112.1 of Title 11.

SECTION 8-302 REPORT TO BE MADE.

Any officer or employee of this city who discovers or receives a report of a dilapidated building which has become detrimental to the health, benefit and welfare of the public and the community or creates a fire hazard to the danger of property, shall report such conditions to the administrative officer. (Ord. No. 266, 8/22/88, in part)

SECTION 8-303 CONDEMNATION, BOARDING AND SECURING OF DILAPIDATED BUILDINGS, NOTICE, REMOVAL, LIEN, PAYMENT.

The administrative officer may cause dilapidated buildings within the city limits to be torn down an removed, or boarded or secured, in accordance with the following procedure:

1. At least ten (10) days' notice shall be given to the owner of the property before the city takes action or holds a hearing as provided herein. A copy of the notice shall be posted

on the property to be affected. In addition, a copy of the notice shall be sent by mail to the property owner at the address shown by the current year's tax rolls in the office of the county treasurer. Written notice shall also be mailed to any mortgage holder as shown by the records in the office of the county clerk to the last-known address of the mortgagee. At the time of mailing of notice to any property owner or mortgage holder, the city shall obtain a receipt of mailing from the postal service, which receipt shall indicate the date of mailing and the name and address of the mailee. However, if neither the property owner nor mortgage holder can be located, notice may be given by posting a copy of the notice on the property, or by publication, as defined by Section 1-102 of Title 11 of the Oklahoma Statutes. Such notice may be published once not less than ten (10) days prior to any hearing or action to be taken pursuant to this section;

2. A hearing shall be held by the administrative officer to determine whether the property is dilapidated and has thereby become detrimental to the health, benefit and welfare of the public and the community, or creates a fire hazard to the danger of property, or needs to be boarded and secured;

3. If the administrative officer finds that the condition of the property constitutes a detriment or a hazard, and that the property would be benefited by the removal of such conditions, or by its boarding and securing, the administrative officer may cause the dilapidated building to be torn down and removed, and boarded and secured, and shall fix reasonable dates for the commencement and completion of the work. The city clerk shall immediately file a notice of lien with the county clerk describing the property, the findings of the administrative officer at the hearing, and stating that the city claims a lien on the property for the destruction and removal, boarding and securing costs and that such costs are the personal obligation of the property owner from and after the date of filing of the notice;

4. The property owner shall have a right of appeal to the city administrator from a order of the administrative officer, or if the order is rendered by the city administrator, then the right to appeal is to the city council. The appeal shall be filed in writing with the city clerk within ten (10) days after the administrative order is rendered;

5. If the work is not performed by the property owner within the dates fixed by the administrative officer, the administrative officer shall direct the tearing down and removal, or boarding and securing, be done by one of the following methods:

a. By the city, provided that the actual cost of the labor, maintenance, and equipment does not exceed Five Hundred Dollars ($500.00);

b. On a private contract basis, in which case it shall be awarded to the lowest and best bidder;

6. After the building has been torn down and removed, or boarded and secured, the administrative officer shall determine the actual cost of the dismantling and removal of dilapidated buildings, or the boarding and securing, and any other expenses as may be necessary in conjunction therewith, including the cost of notice and mailing. The city clerk shall forward a statement of such actual cost attributable to the dismantling and removal or boarding and securing and a demand for payment by mail to the property owner at the address specified in this section. In addition, a copy of the statement shall be be mailed to any mortgage holder at the address specified in this section. At the time of mailing of the statement of costs to any property owner or mortgage holder, the city shall obtain a receipt of mailing from the postal service, which receipt shall indicate the date of mailing and the name and address of the mailee;

7. If payment is not made within six (6) months from the date of the mailing of the statement, the city clerk shall forward a certified statement of the amount of the cost to the county treasurer of the county in which the property is located. The city shall have a lien on the property for such costs, together with interest thereon, and the lien shall continue until the cost shall be fully paid;

8. When payment is made to the city for costs incurred, the city shall file a release of lien or part thereof;

9. The provisions of this section shall not apply to any property zoned and used for agricultural purposes; and

10. Nothing in this section shall prevent the city from otherwise abating a dilapidated building as a nuisance or otherwise exercising its police power to protect the public health, safety or welfare.

(Ord. No. 266, 8/22/88)

(Prior Code, Sec. 5-28, in part)

State Law Reference: 11 O.S. Section 22-112, removal of dilapidated buildings.

Cross Reference: Removal of weeds and trash, Sections 8-201 et seq. of this code; building codes, Sec. 5-101 et seq.

SECTION 8-304 CLEARING UP OF PREMISES FROM WHICH BUILDINGS HAVE BEEN REMOVED.

In all cases in which:

1. A house or building has been removed before the taking effect of this chapter; or

2. A house or building is torn down or demolished pursuant to order of the State Fire Marshal or one of his assistants or the sheriff of the county or the chief of the fire department as provided by state law or as provided in this chapter;

and in which any of the following conditions exist,

1. The premises have not been cleaned up;

2. The premises are cleaned up, and all lumber, brick, concrete, cement, plaster, nails, wire, and other material have not been removed;

3. The materials removed but the cellar space and excavations have not been filled;

4. A cistern or well has not been filled or safely and securely closed and all openings to sanitary sewer have not been plugged to meet the requirements of the city plumbing inspector and securely closed; and

5. The lot or lots have not been leveled and left entirely free from trash or the same be not immediately done,

then the owner or owners of the lot or lots and the person, firm, or corporation who tore down the house or building shall immediately comply with the provisions of this chapter by having all of the things done.

SECTION 8-305 PENALTY.

Any person who shall tear down or begin the tearing down of any house or building within the city limits of the city without having first procured permit therefor as herein provided shall be guilty of an offense against the city and upon conviction thereof shall be punished as provided in Section 1-108 of this code.

CHAPTER 4

ABANDONED, JUNK VEHICLES

Section 8-401	Definitions.
Section 8-402	Prohibited acts; nuisances declared; exceptions.
Section 8-403	Presumption of junk vehicles.
Section 8-404	Responsibility for removal from public property.
Section 8-405	Notice to remove from private property.
Section 8-406	Hearing.
Section 8-407	Removal of motor vehicles from property.
Section 8-408	Notice of removal.
Section 8-409	Redemption of impounded vehicles or motor vehicles.
Section 8-410	Collection of City's costs of removal.
Section 8-411	Penalty; continuing violations.

SECTION 8-401 DEFINITIONS.

The following words, terms, and phrases, and their derivations, when used in this Chapter, shall have the meanings ascribed to them in this section, except where the context clearly indicate a different meaning.

1. "Administrative officer" means the City Manager, or his designee;

2. "Junk vehicle" means any motor vehicle or vehicle, as defined herein, which is wrecked, dismantled, partially dismantled, inoperative, abandoned, or discarded;

3. "Motor vehicle" means any vehicle which is self-propelled and designed to travel along the ground or water and the term shall include, but not be limited to, automobiles, boats, buses, motorbikes, motorcycles, motor scooters, trucks, tractors, go-carts, and golf carts;

4. "Private property" means any real property within the City which is not public property;

5. "Public property" means any real property which is dedicated to the public use which the federal, or any state or municipal government, or any political subdivision thereof owns, leases, or exercises control and dominion over for public purposes; and,

6. "Vehicle" means a machine propelled by power other than human power, designed to travel along the ground by use of wheels, treads, runners, or slides, and to transport persons or property, or to pull machinery, and includes, without limitation, automobile, truck, trailer, motorcycle, tractor, buggy, and wagon.

SECTION 8-402 PROHIBITED ACTS; NUISANCES DECLARED; EXCEPTIONS.

A. It is unlawful and an offense for any person to park, store, or leave, or to permit the parking, storing, or leaving of any junk vehicle of any kind which is in an abandoned, wrecked, dismantled, inoperative, rusted, junked, or partially dismantled condition, whether attended or not, upon any private property within the City for a period of time in excess of thirty (30) days.

B. The presence of any junk vehicle or any abandoned, wrecked, dismantled, inoperative, rusted, junked, or partially dismantled vehicle or boat, or parts thereof, on private property is hereby declared a public nuisance which may be abated as such in accordance with the provisions of this Chapter.

C. The provisions of Subsections A and B shall not apply to any vehicle or motor vehicle:

1. Enclosed within a building on private property;

2. Held in connection with a lawful business enterprise which is properly located as such business enterprise in the appropriate zone, pursuant to the zoning provisions of this code.

3. In operable condition which is not a junk vehicle as defined herein;

4. Located inside an area screened with sight-proof fencing or other opaque barriers;

5. Located in the agricultural zoning district at least 200 feet from any dwelling other than the dwelling of the property where the vehicle is located, and located at least 200 feet from any adjoining road or street.

SECTION 8-403 PRESUMPTION OF JUNK VEHICLES.

A rebuttal presumption shall exist that vehicles are junk vehicles when:

1. Weed or grass undergrowth would indicate to a reasonable person that the vehicle has not been moved thereby permitting such growth to occur;

2. One or more wheels are flat or missing;

3. Portions of the vehicle which are needed for its operation or control are missing;

4. The City has received reports from others as to the length of time such vehicle has been standing in one place without being moved, or that parts are being taken from or added to such vehicle, indicating a salvage or garage operation; or,

5. Evidence exists that provisions of this code pertaining to zoning or to junk and debris are being violated.

SECTION 8-404 RESPONSIBILITY FOR REMOVAL FROM PUBLIC PROPERTY.

Any junk vehicle left on public property may be summarily impounded by a police officer.

SECTION 8-405 NOTICE TO REMOVE FROM PRIVATE PROPERTY.

A. The City Manager, or his designee, shall give notice of removal to the owner or occupant of the private property where the junk vehicle or any abandoned, wrecked, dismantled, or inoperative vehicle or boat is located at least ten (10) days before the time set for compliance. It shall constitute sufficient notice when a copy of a Notice to Remove is posted in a conspicuous place upon the private property upon which the vehicle or boat is located.

B. The Notice to Remove shall contain the demand for removal within ten (10) days, and the Notice to Remove shall state that upon failure to comply with the Notice to Remove the City shall prosecute a criminal complaint for failure to abate the nuisance or undertake such removal with the cost to be levied against the owner of the junk vehicle or the occupant of the property.

SECTION 8-406 HEARING.

A. Any person to whom any Notice to Remove is directed pursuant to the provisions of this Chapter or any other interested party, or any duly authorized agent thereof, may file a written request for hearing before the City Manager within the ten (10) day compliance period, for the purpose of contesting the City's demand for removal. The City Manager, or his designee, Chief of Police, or his designee, and the City Attorney, or his designee, shall constitute a hearing board to hear the request.

B. The hearing shall be held as soon as practicable, but not earlier than five (5) days after receipt of the request, and not later than fifteen (15) days after such receipt. Notice of the time and place of hearing shall be directed to the person making the request. At any such hearing the City and the person to whom notice has been directed may introduce witnesses and evidence.

C. Persons to whom the Notice to Remove is directed pursuant to the provisions of this Chapter, or their duly authorized agent, may appear in Municipal Court pursuant to the citation and summons. Those convicted of failing to abate a public nuisance pursuant

to this Chapter shall be assessed court costs in addition to any other penalty assessed by the Municipal Court.

SECTION 8-407 REMOVAL OF MOTOR VEHICLES FROM PROPERTY.

If the violation described in the Notice to Remove has not been remedied within the ten(10) day period of compliance, or in the event that a notice requesting hearing is timely filed, a hearing had, and the existence of the violation is affirmed by the City Manager, or his designee, the City Attorney may institute and prosecute additional charges on a daily basis, for failure to abate the nuisance, and the City may, in the discretion of the City Manager, take possession of the junk vehicle and remove it from the premises. It shall be unlawful for any person to interfere with or hinder anyone whom the City or the City Manager authorizes to enter upon private property for the purpose of removing a vehicle under the provisions of this Chapter.

SECTION 8-408 NOTICE OF REMOVAL.

Within forty-eight (48) hours of the removal of such junk vehicle the City Manager, or his designee, shall give notice to the registered owner of the junk vehicle, if known, that the vehicle or motor vehicle was removed, and that the vehicle or motor vehicle has been impounded and stored for violation of this Chapter. The notice shall give the location where the vehicle is stored and the proper procedure for redeeming the vehicle.

SECTION 8-409 REDEMPTION OF IMPOUNDED VEHICLES OR MOTOR VEHICLES.

The owner of any vehicle or motor vehicle impounded under the provisions of this Chapter may redeem such vehicle or motor vehicle at any time after its removal, but prior to the sale or destruction thereof, upon proof of ownership and payment to the City Clerk of such sum as may be determined by the City Manager and fixed as the actual and reasonable expense of removal, plus storage.

SECTION 8-410 COLLECTION OF CITY'S COSTS OF REMOVAL.

A. Upon the failure of the owner or occupant of property on which junk vehicles have been removed by the City to pay the unrecovered expenses incurred by the City in such removal, the amount of the unrecovered cost may be added to the municipal utility bills directed to the occupants of the private property from which the junk vehicle was removed, and may be recovered in the same manner of such utility bills.

B. If the private property is not served by the municipal utilities, or if collection efforts are not successful, the costs may be certified by the City Clerk to the County Clerk of the County, who shall add the same to the advalorem taxes assessed against the property, until paid, and shall be collected in the same manner as advalorem taxes against the property; and when collected shall be paid to the City.

SECTION 8-411 PENALTY; CONTINUING VIOLATIONS.

In addition to the procedures for removal of vehicles, any person who shall violate any of the provisions hereof shall, upon conviction, be deemed guilty of an offense against the City. Each act in violation of any of the provisions hereof shall constitute a separate offense and may be chargeable as such. Each day's continued violation of any of the provisions hereof shall constitute a separate offense and may be punishable as such as provided in Section 1-108 of this code.

CHAPTER 5

FOOD AND MILK REGULATIONS

ARTICLE A

FOOD SERVICE SANITATION

Section 8-501 Regulations adopted.

ARTICLE B

MILK AND MILK PRODUCTS

Section 8-520 Regulations adopted.
Section 8-521 Penalty.

ARTICLE A

FOOD SERVICE SANITATION

SECTION 8-501 REGULATIONS ADOPTED.

The latest edition of the "Oklahoma State Department of Health Rules and Regulations pertaining to Food Establishments" is hereby adopted and incorporated by reference in this code. At least one copy of the rules and regulations shall be on file in the office of the city clerk. The rules and regulations shall govern except in case of conflict with the provisions of this chapter, in which case the more restrictive terms shall prevail. (Prior Code, Sec. 11-22, as amended)

State Law Reference: Requirements of food establishments, 63 O.S. Secs. 1-1101 et seq.

ARTICLE B

MILK AND MILK PRODUCTS

SECTION 8-520 REGULATIONS ADOPTED.

The latest edition of the United States Public Health Service Recommendation "Grade A Pasteurized Milk Ordinance with Administrative Procedures" and the provisions of state law governing milk and milk products as set out in Sections 1-1301 to 1-1311 of Title 63 of the Oklahoma Statutes, as amended from time to time, are hereby adopted and incorporated by reference in this code and are enforceable by the city as fully as if they were set out at length herein. At least one copy of the milk ordinance and referenced state law shall be on file in the office of the city clerk. The milk ordinance and the referenced state law shall govern except in case of conflict with the provisions of this chapter, in which case the more restrictive terms shall prevail. (Prior Code, Sec. 11-24, as amended)

State Law Reference: Milk regulations 63 O.S. Secs. 1-1201 et seq., 2 O.S. Secs. 7-1 et seq. (milk manufacture).

SECTION 8-521 PENALTY.

Any person who shall violate any of the provisions of this chapter shall be guilty of a misdemeanor and, upon conviction thereof, shall be punished as provided in Section 1-108 of this code. Such person may also be enjoined from continuing such violations. Each day upon which such a violation occurs shall constitute a separate violation.

CHAPTER 6

RULES FOR STORAGE AND PARKING OF COMMERCIALVEHICLES, RECREATIONAL VEHICLES AND TRAILERS DECLARING A NUISANCE FOR PARKING IN VIOLATION OF THIS CHAPTER

Section 8-601	Definitions.
Section 8-602	Parking of certain vehicles restricted.
Section 8-603	Certain vehicles prohibited; nuisances declared.
Section 8-604	Commercial motor vehicles and equipment.
Section 8-605.	Recreational vehicles, cargo, utility, stock or boat trailers and boats.

SECTION 8-601. DEFINITIONS.

The following words, terms and phrases, when used in this section, shall have the meanings ascribed to them in this section, except where the context clearly indicates a different meaning:

(1) ***Vehicles***: For the purposes of this section, vehicle means every device in, upon or by which any person or property is or may be transported or drawn. "Vehicle" shall include, but is not limited to automobiles, trucks, trailers, motor homes, camper bodies and boats.

(2) ***Private Motor Vehicle*** means any vehicle by which any person or property may be transported or drawn with a maximum rated capacity of one and one-half (1 1/2) tons used exclusively as a passenger vehicle and for hauling property of the owner and used to satisfy the daily transportation needs of the inhabitants of the residence.

(3) ***Commercial Motor Vehicle and Equipment*** means any vehicle or trailer or both with more than two axles; or with any part or attachment to the vehicle or equipment exceeding the height of eight (8) feet, width of eight (8) feet and six (6) inches or a gross vehicle weight rating greater than 12,000 pounds, or an overall length of more than twenty-five (25) feet. This includes and is not limited to semi-trailer tractors and semi-trailers as well as earthmoving equipment. Gardening and or lawn tractors and implements used exclusively for upkeep and maintenance of the residential lot are not prohibited.

(4) ***Recreational Vehicle*** means a vehicle that is not permanently fixed to the ground and not permanently connected to utilities, including water, electric and sewer. Such vehicle is primarily designed as a temporary living quarters for recreational, camping or travel use. It has either its own motive power or is designed to be mounted on or drawn by an automotive vehicle.

The terms "fifth-wheeler", "motor home", "truck camper", "travel trailer" are all examples of recreational vehicles.

(5) ***Boat means*** a vehicle for traveling in or on water.

(6) **Trailers** defined: A vehicle without motor power, designed so that it can be drawn by a motor vehicle, to be used for the carrying of persons or property.

(7) ***Cargo, Utility, Stock and Boat Trailers (without boat mounted)*** means a vehicle without motor power, designed so that it can be drawn by a motor vehicle to be used for the carrying of property. This includes but is not limited to cargo trailers, stock trailers, utility trailers and boat trailers not having a boat mounted

SECTION 8-602. PARKING OF CERTAIN VEHICLES RESTRICTED.

No vehicle which is in excess of eight (8) feet and six (6) inches in width or twenty-five (25) feet in length shall be parked on any street in any residential district between the hours of 8:00 p.m. and 4:00 a.m. except in case of an emergency or for the time necessary to load or unload.

SECTION 8-603, CERTAIN VEHICLES PROHIBITED; NUISANCE DECLARED.

A. The parking and/or storage of motor vehicles, trailers or other vehicles in Piedmont in a manner contrary to the provisions of this chapter shall be deemed a public nuisance and shall constitute an offense punishable as provided otherwise in this code. Nothing in this section shall prohibit the City or any other person from seeking injunctive relief for abatement of any such nuisance.

B. These provisions shall not apply to any vehicle enclosed within a building on private property.

SECTION 8-604. COMMERCIAL MOTOR VEHICLE AND EQUIPMENT.

A. Only one (1) commercial vehicle with or without a trailer and equipment shall be parked or stored outside an enclosed building on a lot occupied by a dwelling or a residentially zoned lot, except when being actively loaded or unloaded. Such commercial vehicle and/or trailer shall not exceed twenty five (25) feet in length, eight (8) feet and six (6) inches in width or fourteen (14) feet and six (6) inches in height. The commercial vehicle shall be parked only on a paved driveway and the commercial vehicle shall be parked at least twelve (12) feet from the edge of the curb or if no curb then twelve (12) feet from the edge of the street pavement or surface.

B. In no case shall any commercial vehicle which is permitted to be parked in a residential zoning district be used for hauling explosives, gasoline, or liquefied petroleum. Parking of semi tractor/trailers or semi trailers, earth moving equipment, off road commercial vehicles and equipment in a residential zoning district is prohibited.

SECTION 8-605. RECREATIONAL VEHICLES, CARGO, UTILITY, STOCK OR BOAT TRAILERS AND BOATS.

A. No recreational vehicle, cargo, utility, stock or boat trailer or boat shall be parked or stored in a manner that would constitute a traffic hazard, or be parked or stored in a public right of way, or be parked or stored in the street. No part of any recreational vehicle, cargo, utility, stock or boat trailer or boat shall extend over the public right of way, street or sidewalk. No sight triangle, at street corners shall be violated. The recreational vehicle, cargo, utility, stock or boat trailer or boat shall be at least twelve (12) feet from the edge of the curb or if no curb then twelve (12) feet from the edge of the street pavement or surface.

B. No recreational vehicle or boat shall be used for living, sleeping or housekeeping purposes; except that one (1) recreational vehicle shall be allowed for temporary living purposes to accommodate the resident and or visitors for no more than seven (7) days in any one ninety (90) day period unless approval of an extension of time is granted in writing by the City Manager of Piedmont provided:

(1) Said recreational vehicle is not to be connected to any permanent utility, other than temporary electrical/water hookups.

(2) No recreational vehicle shall discharge any litter, sewage, effluent or other matter, except into sanitary facilities designed to dispose of such material.

(3) No recreational vehicle shall be used for storage of goods, materials or equipment other than those items considered to be part of the unit or essential for its immediate use.

(4) The resident / host person shall receive no compensation for such temporary occupancy.

C. Indoor parking is permitted.

D. Outside Parking in the front yard is permitted under the following conditions:

(1) Parked only on a paved driveway and parked at least twelve (12) feet from the edge of the curb or if no curb then twelve (12) feet from the edge

of the street pavement or surface and parked perpendicular to the street unless on a circle driveway.

(2) No part of the recreational vehicle, cargo, utility, stock or boat trailer or boat will overhang the street, right of way or sidewalk.

E. Outside parking in the rear yard and side yard is permitted provided:
(1) Parked at least twelve (12) feet from the edge of the curb or if no curb then twelve (12) feet from the edge of the street pavement or surface and parked perpendicular to the street unless on a circle driveway.

(2) No part of the recreational vehicle, cargo, utility, stock or boat trailer or boat will overhang the street, right of way or sidewalk.

F. All areas surrounding and under said vehicles shall be regularly mowed and kept free of all tall vegetation. The area shall be maintained in such manner as to not be considered a violation of the health and nuisance ordinances.

G. Notwithstanding the provisions of the paragraphs above, any unit may be parked anywhere on the premises during active loading or unloading, and use of electricity or propane fuel is permitted when necessary to prepare a recreational vehicle or boat for use. A period not exceeding forty eight (48) hours shall be a reasonable period of time for such active loading and unloading

REGCLATION OF SOUND

Section 8-701	Title.
Section 8-702	Applicability.
Section 8-703	Scope.
Section 8-704	Definitions.
Section 8-705	Measurement standards.
Section 8-706	Maximum permissible sound levels by receiving use.
Section 8-707	Method of sound level measurement.
Section 8-708	Exempt noises.
Section 8-709	Special permits to exceed noise levels.
Section 8-710	Enforcement responsibility.
Section 8-711	Violations; penalty.

SECTION 8-701. TITLE.

This Ordinance may be known and cited as the "Noise Control Ordinance of Piedmont, Oklahoma".

SECTION 8-702. APPLICABILITY.

This Ordinance shall apply to and be enforced in all areas of the City of Piedmont.

SECTION 8-703. SCOPE.

This Ordinance shall apply to all sound originating within the City of Piedmont. It shall be unlawful, except as expressly permitted below, to make, cause or allow the making of any sound which exceeds the limits set forth in Section 6 hereof.

SECTION 8-704. DEFINITIONS.

The following definitions shall apply in the interpretation, enforcement and intent of this Ordinance. When not inconsistent with the context, words used in the present tense include the future, words used in the singular include the plural, and the plural the singular. The word "shall" or "must" is always mandatory and not merely directory. The word "may" is permissible and not mandatory. The masculine gender shall include the feminine or neutral gender. All terms used herein and not defined below shall be in conformance with applicable publications and standards of the American National Standards Institute ("ANSI") or its successor body.

(1) Amplified Sound means any noise or sound that is artificially enhanced or increased in volume by means of amplifiers, speakers, tape or disc players, radios, or similar electronic or electric devices.

(2) City Manager means the City Manager of City of Piedmont or his or her designee.

(3) A-weighted sound level means the sound pressure level in decibels as measured on a sound level meter using the A-weighing scale. The level so read is designated dB(A).

(4) Decibel (dB) means a unit for describing the amplitude of sound, equal to twenty (20) times the logarithm in the base 10 of the ratio of the pressure of the sound measured to the reference pressure, which is twenty (20) micronewtons per square meter.

(5) Noise Control Officer (NCO") means the City Manager of Piedmont and any other person(s) designated as such by the City Manager.

(6) Person means any individual, association, partnership, corporation or other entity and
includes any officer, employee, department, agency or instrumentality of the United States, the state or any political subdivision thereof.

(7) Plainly Audible means sound emanating from a source that can be clearly heard,
including the bass sounds of music, whether or not the Noise Control Officer can make out words.

(8) Sound level means the A-weighted sound pressure level obtained by the use of a
sound level meter and frequency-weighing network, as specified in American National Standards Institute specification for sound level meters (ANSI SI.4-1971, or the latest approved version thereof).

(9) Sound level meter means an instrument that includes a microphone, amplifier, RMS detector, response dampening circuit, output meter, and weighing network used to measure sound pressure levels.

(10) Sound pressure level means twenty (20) times the logarithm to the base 10 of the ratio of the RMS sound pressure to the reference of twenty (20) micronewtons per square meter.

(11) Sunrise means thirty (30) minutes before the official sunrise as indicated in the Farmer's Almanac.

(12) Sunset means thirty (30) minutes after the official sunset as indicated in the Farmer's Almanac.

SECTION 8-705. MEASUREMENT STANDARDS.

Standards, instrumentation, personnel, measurement procedures, and reporting procedures to be used in the measurement of sound shall be consistent with accepted principles of noise measurement in accord with the standards of the American National Standards Institute or its successor body.

SECTION 8-706. MAXIMUM PERMISSIBLE SOUND LEVELS BY RECEIVING USE.

A. Except as provided for in Subsection B & C, and Section 8, no person shall operate or cause to be operated any source of sound in such a manner as to create a sound level that exceeds the sound level limits set forth for the appropriate use category in Table 1 below. The measurement shall be taken at the nearest property line of the generating source of the noise.

Table 1 – Maximum Sound Levels

Zoning Category of Receiving Use	**Time**	**Sound leve (d.b.a.**
Residential zoned property	Sun-down to Sun-up	65
Residential zoned property	Sun-up to Sun-down	70
Commercial or business zoned property *	Sun-down to Sun-up	70
Commercial or business zoned property *	Sun-up to Sun-down	80
Manufacturing and industrial zoned prop.**	Sun-down to Sun-up	70
Manufacturing and industrial zoned prop.**	Sun-up to Sun-down	80
Agricultural zoned property***	Sun-down to Sun-up	65
Agricultural zoned property***	Sun-up to Sun-down	75
Public Space	All times	70

* See section 8, subparagraph (9)
** See section 8, subparagraph (10)
*** See section 8, subparagraph (11)

B. No person shall operate or cause to be operated any source of Amplified Sound from a motor vehicle so that the sound is plainly audible at a distance of 100 feet or more from the source of the sound.

C. No person shall operate or cause to be operated any source of Amplified sound from a residentially zoned property or agriculturally zoned property that is plainly audible at a distance of one hundred (100) feet or more from the source of the sound.

D. No person shall create or cause any sound within any noise-sensitive zone so as to exceed the decibel levels set forth for such zone when measured at a distance of at least 25 feet from the sound source, provided that conspicuous signs are displayed indicating the noise sensitive use. A noise sensitive use means hospitals, nursing homes, schools, courts of law or other areas designated by resolution of the City Council, provided that conspicuous signs are displayed indicating the presence of the noise-sensitive use.

E. When Exceeded: The sound level limits set forth in Table 1 shall be exceeded when any of the following occur:

(1) The sound at any one point in time exceeds any of the established zone limits in Table 1 by a measured sound level of fifteen (15) dB(A); or

(2) The sound exceeds any of the established zone limits in Table 1 by a measured sound level of ten (10) dB(A) for a cumulative total of one minute of more out of any ten (10) minute period; or

(3) The sound exceeds, except in the Industrial District, any of the established zone limits in Table 1 by a measured sound level of five (5) dB (A) continually for a period of five (5) minutes, or a total of five (5) minutes out of any ten (10) minute period.

SECTION 7-707. METHOD OF SOUND LEVEL MEASUREMENT.

For purposes of Section 6.A above, sound level measurement shall be made with a sound level meter using the A-weighing scale, in accordance with standards promulgated by American National Standards Institute or other reasonable standards adopted by the City .

SECTION 8-708. EXEMPT NOISES.

The following are exempt from the provisions of this Ordinance:

(1) Sounds of safety signals, warning devices, emergency pressure relief valves, and bells
and chimes of churches.

(2) Sounds resulting from any authorized vehicle when responding to an emergency call
or acting in time of emergency.

(3) Any sound resulting from activities of a temporary duration authorized by a license or permit issued pursuant to Section 9 hereof.

(4) Amplified sound regulated by the federal government, but only to the extent of federal
preemption.

(5) Sounds of lawnmowers and other lawn, tree and garden maintenance equipment being used for ordinary lawn, tree and garden maintenance between sunrise and sunset

(6) Tools and equipment being used to construct lawful structures, including land moving equipment, between sunrise and sunset.

(7) Sounds generated by school-sponsored activities, including, but not limited to sporting events, band activities, plays, and graduation and other ceremonies and government sponsored activities, including parades, fireworks displays.

(8) Sounds generated by normal commercial operations for commercial uses located in a C-1, C-2, C-3 zoning district, including Commercial PUDs. A use allowed in the district by special exception or special use permits or uses that may be a part of a Commercial PUD may be subject to conditions that reduce noise levels of the proposed use in accord with this ordinance.

(9) Sounds generated by normal industrial operations for industrial uses located in an industrial zoning district, including Industrial PUDs. A use allowed in the district by special exception or special use permits or uses that may be a part of an Industrial PUD may be subject to conditions that reduce noise levels of the proposed use in accord with this ordinance.

(10) Sounds generated by normal agricultural operations in agricultural zoning districts, including Agricultural PUDs. An agriculture use allowed in the district by special exception or special use permits, or uses that may be a part of an Agricultural PUD may be subject to conditions that reduce noise levels of the proposed use in accord with this ordinance.

(11) Discharge of weapons for lawful hunting or target practice in an area where such hunting or target practice is allowed by this code or state law between sunrise and sunset.

SECTION 8-709. SPECIAL PERMITS TO EXCEED NOISE LEVELS.

Application for a permit for relief from the maximum sound level limits may be made in writing to the City Manager. Any permit granted hereunder must be in writing and shall contain all conditions (including time limits) upon which the permit is granted.

A fee for such permit shall be established by the City Manager to cover the cost of mailing and review. The City Manager may grant the special permit as follows:

(1) The City Manager may impose any reasonable conditions or requirements
deemed necessary to minimize adverse effects upon the community or the surrounding neighborhood, including use of mufflers, screens or other sound-attenuating devices.

(2) If the special purpose is a recurring one, it must not recur more than four times in any calendar year.

(3) Special permits may be issued for no longer than fifteen (15) consecutive days, renewable by further application.

(4) City Manager shall send written notices to property owners within 300 feet of the parcel where the activity will take place prior to the issuance of a special permit and allow said owners a reasonable time to object to the issuance of the permit. Such permits may be reviewed and issued as part of a temporary use permit. The applicant shall furnish with his application a list of all property owners within the 300 feet radius as shown on the current years County tax rolls along with a fee as determined by the City Council.

SECTION 8-710. ENFORCEMENT RESPONSIBILITY.

The NCO shall have the enforcement responsibility for this Ordinance. The NCO shall investigate any potential violations of this Ordinance either on complaint of a person alleging a violation or by observation. Such complainant may be anonymous. This Ordinance shall not be read to preempt or abrogate the authority of the Piedmont Police Department to issue citations for violation of City Ordinances.

SECTION 8-711. VIOLATIONS; PENALTY.

It shall be unlawful for any person to hinder or prevent the performance of any act or duty authorized or required by this Ordinance. Violation of any provision of this Ordinance is an offense with a maximum penalty of $500 plus court costs. The NCO, finding probable cause that a person has committed an act in violation of this Ordinance, may issue that person a citation.

PART 9

LICENSE AND BUSINESS REGULATIONS

CHAPTER 1

GENERAL PROVISIONS

Section 9-101	Licenses conditioned on compliance with code provisions.
Section 9-102	Issuance conditioned upon approval, fees, inspection or bond.
Section 9-103	Transfer prohibited.
Section 9-104	Separate licenses required.
Section 9-105	Free licenses and rebates; partial fees.
Section 9-106	Expiration date.
Section 9-107	Suspension or revocation.
Section 9-108	Licenses and permits; not to be construed as an endorsement.
Section 9-109	Renewal of licenses, general requirements.
Section 9-110	Processing fee for all licenses, permits.
Section 9-111	License required, fee.
Section 9-112	Application.
Section 9-113	Posting.
Section 9-114	Suspension or revocation or license or permits; refusal to issue licenses or permits; notice and hearing.

CHAPTER 2

ITINERANT VENDORS

Section 9-201	Definitions.
Section 9-202	License required, blanket license.
Section 9-203	Fee.
Section 9-204	Application for license.
Section 9-205	Investigation, approval or disapproval.
Section 9-206	Bond for license.
Section 9-207	Service of process.
Section 9-208	Sale of foods.
Section 9-209	Identification tag or badge, display.
Section 9-210	Exceptions.
Section 9-211	Hours.
Section 9-212	Provisions cumulative, revocation.
Section 9-213	Penalty.

CHAPTER 3

ALARM SYSTEMS

Section 9-301	Purpose and scope
Section 9-302	Definitions
Section 9-303	Permits required; fee assessment
Section 9-304	Businesses; registration required
Section 9-305	Certain interconnections prohibited
Section 9-306	False alarms; charges; permit revocation
Section 9-307	Violation; appropriate legal action

CHAPTER 1

GENERAL PROVISIONS

Section 9-101	Licenses conditioned on compliance with code provisions.
Section 9-102	Issuance conditioned upon approval, fees, inspection or bond.
Section 9-103	Transfer prohibited.
Section 9-104	Separate licenses required.
Section 9-105	Free licenses and rebates; partial fees.
Section 9-106	Expiration date.
Section 9-107	Suspension or revocation.
Section 9-108	Licenses and permits; not to be construed as an endorsement.
Section 9-109	Renewal of licenses, general requirements.
Section 9-110	Processing fee for all licenses, permits.
Section 9-111	License required, fee.
Section 9-112	Application.
Section 9-113	Posting.
Section 9-114	Suspension or revocation or license or permits; refusal to issue licenses or permits; notice and hearing.

SECTION 9-101 LICENSES CONDITIONED ON COMPLIANCE WITH CODE PROVISIONS.

All permits and licenses issued under the provisions of this code for or to any person, business, activity, device or machine shall be conditioned upon substantial compliance by the permittee or licensee with all provisions of this code for the regulation and maintenance of the public order, welfare, peace, health and safety. In addition, the permits and licenses shall be conditioned upon strict compliance with the provisions of this code relating specifically to the person, business, activity, device or machine covered by the permit or license.

State Law Reference: Licenses, city powers, procedures, 11 0.S. Secs. 22-106, 22-107

Cross Reference: See also alcoholic beverage licenses, Sections 3-101 et seq of this code; building trade licenses, Sections 5-101 et seq of this code, Fee schedule, Appendix 1 of this code.

SECTION 9-102 ISSUANCE CONDITIONED UPON APPROVAL, FEES, INSPECTION OR BOND.

Whenever in any section any permit or license issued by an officer, agency or department is made contingent upon the approval of another officer, agency or department, or contingent upon the payment of any fee or fees, or the making of any prior inspection or examination, or the furnishing of any bond in connection therewith, then the issuance of the permit or license shall be withheld until the approval, inspection or examination is had or the bond provided and until the fee has been paid as required.

Cross Reference: Right of entry, inspections, as condition of license, Sec. 1-203 of this code.

SECTION 9-103 TRANSFER PROHIBITED.

No license or permit issued shall be transferable nor may any license or permit be sold,

assigned, or mortgaged, except as may be specifically authorized by this code. No person may attempt to do business under a license or permit transferred to him. (Prior Code, Sec. 5-6, in part)

SECTION 9-104 SEPARATE LICENSES REQUIRED.

A. A separate license must be obtained for each branch or separate place of business in which the trade, calling, profession or occupation is carried on, Each license shall authorize the party obtaining it to carry on, pursue or conduct only that trade, calling, profession or occupation described din the license, except as may be otherwise provided herein.

B. Whenever one or more businesses or occupations listed in the license fee schedule is required to pay Twenty Dollars ($20.00) license fee a year shall be combined under one ownership occupying the same building or premises of adjoining premises, the license tax levied in the fee schedule for the combined businesses or occupations shall be in the sum of Twenty-five Dollars ($ 25.00) per year. (Prior Code, Sec. 5-9, 5-11)

SECTION 9-105 FREE LICENSES AND REBATES; PARTIAL FEES.

No free licenses shall be granted, nor rebates allowed, except as specifically set forth by this code, nor any sum accepted less than the amount specified, nor for a shorter period than required by this code. (Prior Code, Sec. 5-7)

SECTION 9-106 EXPIRATION DATE.

A. All annual licenses issued shall expire on December 31 or on the date specified in this code or on the license.

B. Where the fee prescribed and paid for is for a period less than one year, the license shall be issued only for such period and shall expire at the end thereof.

C. All permits shall expire upon execution of the act or activity for which the permit was issued, or at the expiration time noted on the permit or in this code, whichever occurs first. (Prior Code, Sec. 5-6, in part)

SECTION 9-107 SUSPENSION OR REVOCATION.

Any permit or license shall be subject to suspension or revocation for failure to comply with the terms of this code and as may otherwise be provided by this code.

SECTION 9-108 LICENSES AND PERMITS; NOT TO BE CONSTRUED AS AN ENDORSEMENT.

No permit or license shall be construed or used in any manner or by any person as an official endorsement by the city of the person, activity or thing licensed or permitted.

SECTION 9-109 RENEWAL OF LICENSES, GENERAL REQUIREMENTS.

For all occupations, activities or businesses regulated in this code, no applicant for an initial or renewal license may engage in the activity, occupation or business regulated without issuance of the license as provided in this chapter unless otherwise provided herein. Renewal applications

and fees must be received by the city prior to the expiration of the license, except where otherwise provided by this code, or else the applicant must proceed in the manner required of an applicant for a new or initial license.

SECTION 9-110 PROCESSING FEE FOR ALL LICENSES, PERMITS.

All license and permit fees shall be paid in advance to the city prior to the issuance of any license or permit. The fee, less the applicable charge for processing the application for a permit or license, shall be refunded to the applicant, upon demand, in case the license or permit filed for is not granted. Except as provided otherwise in this code, the processing fee shall be as set by the city council by motion or resolution.

SECTION 9-111 LICENSE REQUIRED; FEE.

A. It is unlawful for any person to engage in, carry on, conduct, operate or follow any of the trades, businesses, vocations, professions, callings or activities set out in this code or section, unless he has a current license issued by the city clerk.

B. Any person who is required to obtain a license or a permit or to keep records under the provisions of any state sales tax law is required to be licensed pursuant to this chapter.

C. The fees for such licenses shall be as set by the city by motion or resolution. The fee shall be waived for educational, charitable, religious groups, qualifying as 501(c)(3) organizations.

D. The following are exempt from the requirement to obtain a license from the city as provided herein:

1. Farmers and truck gardeners from lands owned, cultivated or controlled by them, who offer for sale or sell, or who peddle and sell from house to house, vegetables, butter, eggs and farm products produced and raised by the farmers and truck gardeners from such land or produced thereon; and

2. Needy ex-service persons holding a certificate duly issued by a district judge as provided by state law (72 O.S. Section 1).

Any person who desires to be exempt from the license fees levied under this chapter due to engaging in interstate commerce shall provide sufficient data on transactions and proof to the city to establish the interstate commerce nature of his business and transactions. If the city refuses to issue an interstate commerce exemption for the license fees to a commercial business activity, then the applicant is entitled to a hearing before the city judge. (Prior Code, Sec. 5-3, 5-10)

Cross Reference: See also Secs. 3-101 et seq. on Alcoholic beverage license; Secs. 3-201 et seq. on Nonalcoholic beverage licenses; Secs. 5-101 et seq. on building, plumbing, electrical, mechanical, etc., licenses; Sections 8-501 et seq. on food service and milk licenses; and the city's fee schedule.

SECTION 9-112 APPLICATION.

Application for a license required by this code shall be filed with the city clerk and shall contain such reasonable information as he may require, in addition to any information specifically

required by other provisions of this chapter.

SECTION 9-113 POSTING.

Each license issued under this chapter shall be posted in a conspicuous place where the business, vocation or calling is carried on, and the holder of such license shall immediately show the same to any officer of the city upon being requested so to do. (Prior Code, Sec. 5-9)

SECTION 9-114 SUSPENSION OR REVOCATION OF LICENSES OR PERMITS; REFUSAL TO ISSUE LICENSES OR PERMITS; NOTICE AND HEARING.

A. The council or other authorized official may refuse to issue or renew a license or permit; or the licenses or permits issued pursuant to this code, unless otherwise provided, may be suspended or revoked by the council or such other authorized official, department, board or agency where applicable, after notice and hearing for any of the following causes:

1. Any fraud, misrepresentations or false statements contained in the application for permit or license;

2. Any fraud, misrepresentation or false statement made in connection with the selling of goods, wares, merchandise and services;

3. Conviction of the applicant, licensee or permittee of any crime of misdemeanor involving moral turpitude or a violation of any act of the state, or any law of the United States having a reasonable relationship to the purpose and scope of the permit or license;

4. Conducting the activity under this code or any ordinance of the city in an unlawful manner or in such a manner as to constitute a breach of the peace or to constitute a menace to the health, safety, morals or general welfare of the public; or

5. Failure to provide timely remittances of tax proceeds.

B. Notice of hearing for the suspension or revocation of a license or permit shall be in writing given by the clerk, setting forth specifically the grounds of the complaint and the time and place of the hearing. Service of such notice shall be made by either personal service or by certified mail, return receipt requested, to the applicant, licensee or permittee at the last-known address, at least five (5) days prior to the date set for the hearing.

C. In case of refusal to issue a permit or license or the suspension or revocation of a license or permit as herein provided, no portion of the application, license or permit fee shall be returned to the applicant, licensee or permittee unless otherwise provided in this code or any ordinance of the city.

D. Any suspension or revocation hereunder may be either in addition to or instead of any penalty or fine as prescribed in this code or any ordinance of the city.

E. The order of the council or such other authorized official, department, board or agency where applicable shall be the final municipal action for the purpose of judicial review unless otherwise specifically provided.

F. This section is in addition to any other procedures in this code for license suspension or revocation.

CHAPTER 2

ITINERANT VENDORS

Section 9-201	Definitions.
Section 9-202	License required, blanket license.
Section 9-203	Fee.
Section 9-204	Application for license.
Section 9-205	Investigation, approval or disapproval.
Section 9-206	Bond for license.
Section 9-207	Service of process.
Section 9-208	Sale of foods.
Section 9-209	Identification tag or badge, display.
Section 9-210	Exceptions.
Section 9-211	Hours.
Section 9-212	Provisions cumulative, revocation.
Section 9-213	Penalty.

SECTION 9-201 DEFINITIONS.

For the purpose of this chapter, the following terms shall have the meaning respectively ascribed to them herein:

1. "Commercial" means soliciting for a business purpose which is intended to be for profit and is not intended to be charitable, religious, not for profit or political;

2. "Itinerant" means having no regular place of doing business or soliciting in the city and includes but is not limited to making regular delivery or providing goods over an established route through the city;

3. "Peddler" means a person soliciting commercial orders for goods or services which are to be provided from stocks or goods carried with the peddler or which are services provided by the peddler at the time the order is made;

4. "Soliciting" means all activities of peddlers, solicitors and vendors attempting to obtain business. Such activities may include, but are not limited to, distribution of handbills or leaflets to the public directly or by placing them in a mailbox, on a doorknob or otherwise on any property; coming personally onto any property for the purposes defined herein; calling the occupants of any property by telephone for the purposes herein defined; or calling or inviting any prospective customers to purchase or obtain merchandise, product or service;

5. "Solicitor" means a person soliciting commercial orders for goods or services which are to be provided or shipped to the consumer at a later date; and

6. "Vendor" means any person engaged in a business or occupation selling or offering to sell any merchandise, product or service, and includes but is not limited to peddlers and solicitors.

(Prior Code, Sec. 5-2, in part)

SECTION 9-202 LICENSE REQUIRED, BLANKET LICENSES.

A. Any itinerant vendor, solicitor or peddler shall obtain a license from the city prior to any soliciting in the city, unless exempted herein, to cover each person who will be soliciting and each location or separate place of business.

B. Owners or lessees of buildings in which itinerant vendors operate or locate must obtain a blanket license covering all itinerant vendors who will be established in the building controlled by the owner or lessee. Governmental agencies owning public buildings may arrange a letter of agreement with the city in lieu of a license if licensing is contrary to the regulations governing the governmental agency. In such a case, the letter of agreement will provide for the same requirements as are shown in this chapter and will provide that the city receive half the rental fee paid by the itinerant vendor until the city's receipts equal the amount required for a blanket license fee.

C. Itinerant vendors, solicitors or peddlers may go house to house only during the hours provided in Section 9-211. (Prior Code, Sec. 5-13, in part)

SECTION 9-203 FEE.

The fee for licenses herein required shall be as set by the city council by motion or resolution. The fees may be waived for educational, charitable, religious groups, qualifying as 501(c)(3) organizations who make house to house solicitations.

SECTION 9-204 APPLICATION FOR LICENSE.

A. Applicants for licenses shall file during regular business hours a written application signed by the applicant, if an individual, by all partners if a partnership, and by a qualified corporate officer, if a corporation, with the licensing officer, showing:

1. Name and address of person or persons having the management or supervision of the applicant's business during the time that it is proposed to be carried on in the city; the location or address of such person or persons when engaged in such business; the permanent address or addresses of such person or persons; the capacity in which such person or persons will act; the name and address of the person, firm or corporation for whose account the business will be carried on, if any, and if a corporation, under the laws of what state the same is incorporated;

2. The place or places in the city within the proper zoning classification, where it is proposed to carry on the applicant's business and the length of time during which it is proposed that the business be conducted;

3. Place or places, other than permanent place of business of the applicant, within the six (6) months next preceding the date of the application, where the applicant has conducted a transient business;

4. The nature of the goods or products being sold, that is whether they are "seconds," rejects or first-line quality, and whether any warranty applies to the items being sold; if a warranty applies, the period of the warranty and the name and address of the warrantor and the procedures for filing for the adjustment of refund shall be specified;

5. A statement that the applicant agrees to the requirement to pay all state and city sales taxes due on all items which are subject to sales taxes and recognizes that a copy of all applications will be provided to the local office of the Oklahoma Tax Commission;

6. Current state sales tax permit number;

7. Current license or permit, if any, which may be required by state law or ordinances of the city for the particular activity or business;

8. If a motor vehicle is to be used in the business, a description of the vehicle together with motor vehicle registration number and the license number for the vehicle, and:

a. Proof of liability insurance required by state law; and

b. Proof or verification from the insurance carrier that the city clerk will be provided at least ten (10) days notice of any cancellation; and

9. Proof of 501(c)(3) tax status if claiming exemption from the license fees.

B. Applicants for a blanket itinerant vendor license shall file during regular business hours a written application signed by the applicant, if an individual, by all partners, if a partnership, and by a corporation officer, if a corporation, with the license and permits clerk showing:

1. Name and address of person or persons having the management or supervision of the building in which itinerant vendor shall conduct business;

2. Name and address of the person or persons having the management or supervision of the applicant's business during the time that is proposed to be carried on in the city; the location or address of such person or persons when engaged in such business; the permanent address or addresses of such person or persons; the capacity in which such person or persons will act; the name and address of the person, firm or corporation for whose account the business will be carried on, if any, and if a corporation, under the laws of what state the same is incorporated and licensed to operate in the state;

3. A general description of the products or services that will be sold by the itinerant vendor;

4. A statement that the applicant shall establish the following controls over itinerant vendors and shall maintain records concerning each itinerant vendor for one year after the engagement dates involving the itinerant vendors:

a. The applicant shall determine the names and addresses of each salesperson involved locally for an itinerant vendor and determine the names and permanent addresses of the parent company, if any, controlling the itinerant vendor;

b. The applicant shall determine the nature of the merchandise or product to be sold, determine whether it is a "reject" line or seconds, determine whether there are warranties of the product, and how any complaint is to be filed for warranty adjustment. The applicant shall require that the vendor display a sign prominent enough to disclose to all potential customers that the product

consists of seconds, rejects or irregulars if such is the case;

c. The applicant shall inform each vendor of the requirement to pay state and city sales taxes and shall forward the name, product involved, and dates of the vendor's engagement to the local office of the state tax commission. Further, the applicant will furnish the vendor with one copy of the state sales tax report form and require him to certify that he will submit a sales tax report at the conclusion of his engagement in the city; and

d. The applicant shall provide copies of all ordinances, regulations, tax forms, etc., to itinerant vendor and provide the city with a statement signed by the vendor agreeing to comply with same.

SECTION 9-205 INVESTIGATION, APPROVAL OR DISAPPROVAL.

A. All applications for licensing or registration shall be immediately referred for investigation as to the truth thereof, which investigation shall be conducted within ten (10) business days after the application and fee are deposited with the city.

B. If the city finds no past history of the applicant indicating violations of this code and that the application is properly made and truthful, a license shall be issued to the approved applicant upon payment of the fee therefor and the filing of the required bond.

C. In all matters of denial of the license or registration, the applicant shall be forthwith advised thereof. The applicant shall be advised that an appeal of a denied license may be submitted to the city council. (Prior Code, Sec. 5-14, in part)

SECTION 9-206 BOND FOR LICENSE.

A. Before any license as provided by this chapter shall be issued, such applicant shall file a bond running to the city. A person engaging in business as an itinerant vendor shall file a bond in the sum set forth in the bond schedule, secured by the applicant as principal and two (2) sureties upon whom service of process may be made in the state.

B. All such bonds shall be approved by the city attorney and conditioned that:

1. Applicant shall comply with all of the provisions of the ordinances of the city and the statutes of the state regulating and concerning the sale of goods or wares and merchandise; and

2. Will pay all judgments rendered against the applicant for any violation of the ordinances or statutes, or any of them, together with all judgments and costs that may be recovered against him by any person or persons for damage growing out of any misrepresentation or deceptive practice by any person transacting such business with such applicant, whether such misrepresentation or deception were made or practiced by the owner or by their service, agents or employees, either at the time of making the sale or through any advertisement of any character whatsoever, printed or circulated with reference to the goods, wares and merchandise sold or any part thereof. Any action on the bond may be brought in the name of the city to the use of the aggrieved person. (Prior Code, Sec. 5-16, in part)

SECTION 9-207 SERVICE OF PROCESS.

Before any license for an itinerant vendor, as herein provided, shall be issued, such applicant shall file with the City Clerk an instrument nominating and appointing the City Clerk his true and lawful agent, with full power and authority to acknowledge service of notice of process for and on behalf of the applicant in respect to any matters connected with or arising out of the business transaction under the license and the bond given as required by this Chapter, or for the performance of the conditions of the bond, or for any breach thereof. The instrument shall also contain recitals to the effect that the applicant for the license consents and agrees that service of any notices or process may be made upon the agent; and when so made, shall be taken and held to be as valid as if personally served on the person or persons applying for the license under this Chapter, according to the laws of the State or any other state, and waiving all claims or right of error by reason of such acknowledgment of service or manner of service. Immediately upon service of process upon the City Clerk, as herein provided, the City Clerk shall send to the license at his last-known address, by certified mail, a copy of the notice.

SECTION 9-208 SALE OF FOODS.

A. All applicants for license to sell foods and merchandise for human or animal consumption shall have their application for license approved in accordance with the applicable State food establishment requirements before the licenses are issued.

B. The sale of foods requires an individual license not covered by blanket licenses.

Cross Reference: See also Section 8-601 et seq. on food regulations.

SECTION 9-209 IDENTIFICATION TAG OR BADGE DISPLAY.

At all times there shall be posted in a conspicuous place upon each:

1. Licensee if an individual;

2. Vehicle or booth used by a licensee; or

3. Building or premises as appropriate for blanket licenses,

a badge, tag, or card issued by the City as proof of issuance of a license. The card, tag, or badge shall state the name of the licensee and the date of expiration of the license. Blanket licenses shall be displayed and readily available for inspection by the City.

SECTION 9-210 EXCEPTIONS.

A. The following are exempt from the license requirements of this chapter:

1. Farmers and truck gardeners from lands owned, cultivated, or controlled by them, who offer for sale or sell, or who solicit and sell

2. from house to house, vegetables, butter, eggs, and farm products produced and raised by the farmers and truck gardeners from such land or produced thereon;

3. Needy ex-service persons holding a certificate duly issued by a district judge having jurisdiction as provided by state law.

4. Persons selling newspapers or newspaper subscriptions or delivering newspapers.

B. Any person who desires to be exempt from the license fees levied under this chapter due to engaging in interstate commerce shall provide sufficient data on transactions and proof to the City to establish the interstate commerce nature of his business and transactions. If the City refuses to issue an interstate commerce exemption for the license fees to a commercial business activity, then the applicant is entitled to a hearing before the City Judge.

SECTION 9-211 HOURS.

Soliciting from house to house is permitted only between the hours of 9:00 A.M. and 9:00 P. M. daily. (Prior Code, Sec. 5-13)

SECTION 9-212 PROVISIONS CUMULATIVE, REVOCATION.

A. The requirements of this Chapter are cumulative to any provisions of State law or City ordinances regulating or governing any of the activities licensed herein. In the case of any conflict between the provisions of this Chapter and those of any other City ordinance or State law, the more restrictive requirements shall apply.

B. The provisions of Chapter 1 of this Part on revocation or suspension of licenses shall apply to licenses issued under this Chapter. (Prior Code, Sec. 5-17 in part)

SECTION 9-213 PENALTY.

Any person violating any o the provisions of this Chapter shall, upon conviction thereof, be punished as provided in Section 1-108 of this Code. (Prior Code, Sec. 5-18 in part)

CHAPTER 3

ALARM SYSTEMS

Section 9-301	Purpose and scope
Section 9-302	Definitions
Section 9-303	Permits required; fee assessment
Section 9-304	Businesses; registration required
Section 9-305	Certain interconnections prohibited
Section 9-306	False alarms; charges; permit revocation
Section 9-307	Violation; appropriate legal action

SECTION 9-301 PURPOSE AND SCOPE.

The purpose of this chapter is to enhance and protect the emergency services of the city.

SECTION 9-302 DEFINITIONS.

For the purpose of this chapter, the following definitions shall apply unless the context clearly indicates or requires a different meaning.

ALARM ADMINISTRATOR. The department head, or his or her designee, of the department designated by the City Manager to perform the administrative functions of this chapter.

ALARM BUSINESS. The business by any individual, partnership, corporation or other entity of selling, leasing, maintaining, servicing, repairing, altering, replacing, moving, installing or monitoring any alarm system or causing to be sold, leased, maintained, serviced, repaired, altered, replaced, installed or monitored any alarm system in or on any building, structure or facility, but excluding any person who installs his or her own alarm on his or her own property to protect his or her own personal property.

ALARM SYSTEM.

1. One or more devices designed to detect and signal unauthorized intrusion, entry, robbery, fire or other emergency condition, which signals are responded to by public law enforcement officers, Fire Department personnel, private security guards or security officers and includes:

a. Interconnecting systems which are connected, either directly or through a mechanical device, to a telephone for the purpose of using the telephone line to transmit a message upon activation of the alarm system;

b. Automatic dialing devices; and

c. Audible systems not interconnected to telephone lines which when activated sound a bell, siren or other device that make an audible or visual signal at the location protected by the alarm system.

2. ALARM SYSTEMS installed within vehicles shall be excluded.

ALARM USER. Any person, firm, partnership, association, corporation, company or organization in control of any building, structure or facility located within the city, wherein an alarm system is maintained, and included users outside the city for the purposes of false alarm charges in 9-306(A).

AUTOMATIC DIALING DEVICE. A device which is interconnected to a telephone line and is programmed to select a predetermined telephone number and transmit by voice message or code signal an emergency message indicating a need for police, fire or medical response.

FALSE ALARM.

1. The activation of a burglary, robbery, fire or other alarm for the purpose of summoning emergency assistance or which causes the Police or Fire Department to be summoned, at a time when no emergency exists and includes those caused by:

a. Error, mistake or any action by any person, firm, corporation or other entity or agent thereof, owning or operating any dwelling, building or place which results in the activation of any alarm system when no emergency exists;

b. Malfunction or any activation of any alarm system caused by a flaw in the normal operation, design, installation, maintenance of the system, faulty equipment, change in environment, atmospheric conditions or premises upon or within which the alarm system is operating; and

c. Intentional misuse or any intentional activation of an alarm system when no burglary, robbery, vandalism, fire or other emergency is in progress, but excluding testing during installation and regular maintenance when the alarm user notifies the police service in advance and receives permission for the test.

2. An alarm will not be considered a FALSE ALARM if it is determined by the police service that the alarm was the result of vandalism, attempted entry or severe weather, which causes visible, physical or other evidence of damage to the premises.

IN-STATION ALARMS. An alarm system which is connected to the police station communications area or the Fire Department by telephone or other means which summons emergency assistance.

SECTION 9-303 PERMITS REQUIRED; FEE ASSESSMENT.

A. No alarm system shall be installed, maintained or operated until the alarm user shall have first obtained a permit from the alarm administrator for each alarm system on the premises. It shall be unlawful to install, maintain or operate an alarm system without obtaining a permit.

B. The application for permit shall include information as to the number of and type of alarms installed, alarm business providing the service, monitoring agent and numbers to be called in the event an emergency should occur. An approved application and permit shall bear the signature of the alarm administrator. The administrator shall assess an initial and annual permit fee in an amount to be established by resolution of the City Council of the City of Piedmont.

C. An annual permit fee is hereby levied on each alarm system within the city. The fee shall be paid by the alarm user and shall be due on July 1 of each year and shall expire on the following June 30. No free permits shall be granted, nor rebates allowed for any cause, nor any sum accepted less than the amount specified herein. Nor shall a permit be issued for a shorter period than required in this section. No fee shall be levied on governmental agencies maintaining an alarm, provided that this shall not exempt the agencies from the requirement to obtain a permit. The amount of such fee shall be established by resolution of the City Council of the City of Piedmont.

D. Alarm users shall display all current permit stickers on the front entrance of their residence or business so that it will be available for inspection any time, night or day.

SECTION 9-304 BUSINESSES; REGISTRATION REQUIRED.

A. No person, firm or corporation shall engage in the alarm industry business, as defined in 59 O.S. §§ 1800.1 *et seq.*, unless licensed pursuant to the State Alarm Industry Act.

B. Every alarm business selling, leasing or furnishing any alarm system within the city shall furnish the alarm user with instructions that provide adequate information to enable the alarm user to operate the alarm system properly and to obtain service for the alarm system.

C. Every alarm business doing business with alarm users shall be required to register with the alarm administrator each calendar year. Registration shall include copies of the state license of the company or individual providing services to the alarm user, emergency contact information and such other information as the alarm administrator deems appropriate.

SECTION 9-305 CERTAIN INTERCONNECTIONS PROHIBITED.

It is unlawful for any person to program an automatic dialing device to any telephone line which, when activated, dials the digits 9-1-1. It is unlawful for an alarm user to fail to disconnect or reprogram an automatic dialing device which is programmed to dial the digits 9-1-1.

SECTION 9-306 FALSE ALARMS; CHARGES; PERMIT REVOCATION.

A. An excessive number of false alarms shall be deemed to be more than three false alarms within any three-month period.

B. It shall be unlawful for any person, owner, tenant, corporation, partnership, trust, joint venture or any other entity and their respective agents who have a right to exert control and/or any other legal entity or person who has a record interest and/or control over property protected by an alarm system who allows, continues or causes excessive false alarms, as defined in § 9-302, to be made or continued.

SECTION 9-307 VIOLATION; APPROPRIATE LEGAL ACTION.

In addition to the penalties prescribed by City Code, the alarm administrator is hereby authorized to take appropriate legal action to require the disconnection of any alarm system operated in violation of this chapter, including, but not limited to disconnection of the alarm system through injunctive relief in the District Court.

PART 10

OFFENSES AND CRIMES

CHAPTER 1

GENERAL PROVISIONS

Section 10-101	Attempts to commit an offense.
Section 10-102	Aiding in an offense.
Section 10-103	"Offense" defined.
Section 10-104	"Violation" defined.
Section 10-105	Penalty not to excuse offense.
Section 10-106	Capacity to commit offense.
Section 10-107	Intoxication, no defense.
Section 10-108	Witness, self incrimination.
Section 10-109	Nuisances.
Section 10-110	Conspiracy.
Section 10-111	Limitations of actions.
Section 10-112	Lawful use of force.

CHAPTER 2

OFFENSES AGAINST PERSONS

Section 10-201	Assault and battery.
Section 10-202	Assault defined.
Section 10-203	Battery defined.
Section 10-204	Reckless conduct.

CHAPTER 3

OFFENSES AGAINST PROPERTY

Section 10-301	Petit larceny; embezzlement; shoplifting.
Section 10-302	Larceny by false pretense.
Section 10-303	Altering keys.
Section 10-304	Possession of stolen property.
Section 10-305	Defrauding public accommodations; proof; exception.
Section 10-306	Concealing unpurchased merchandise, merchant's authority to detain.
Section 10-307	Failure to pay fare to public conveyance.
Section 10-308	False or bogus checks.
Section 10-309	Harmful deception.
Section 10-310	Defacing building, damaging property.
Section 10-311	Removing or breaking private property.
Section 10-312	Damaging private property.

Section 10-313	Public works under construction.
Section 10-314	Damaging or tampering with motor vehicle.
Section 10-315	Tampering with or damaging of utilities.
Section 10-316	Destroying trees and shrubbery.
Section 10-317	Trespassing prohibited notice, trespass prohibited.
Section 10-318	Congregating, parking on premises after hours.
Section 10-319	Unlawful intrusion on land.
Section 10-320	Throwing or shooting at persons, property.
Section 10-321	Throwing out lighted substances or debris prohibited.
Section 10-322	Littering, deposits unlawful.
Section 10-323	Posting advertising matter on building of another.
Section 10-324	Posting advertising matter on utility poles or on or over streets and sidewalks.
Section 10-325	Interference with radio, television or telephone reception of others.
Section 10-326	False weights.
Section 10-327	Unlawful use of another's garbage or refuse containers.
Section 10-328	Fireworks prohibited, exceptions.

CHAPTER 4

OFFENSES AGAINST PUBLIC PEACE

Section 10-401	Disturbing the peace.
Section 10-402	Disturbing funerals.
Section 10-403	Disorderly conduct.
Section 10-404	Unnecessary noise prohibited.
Section 10-405	Parades and public assemblies.

CHAPTER 5

OFFENSES AGAINST THE PUBLIC

Section 10-501	Public intoxication.
Section 10-502	Marijuana prohibited.
Section 10-503	Drug paraphernalia.
Section 10-504	Sniffing glue, paint and other substances.
Section 10-505	False representation as blind, crippled or physically defective to obtain money, aid.
Section 10-506	Prowling on premises.
Section 10-507	Misrepresenting age by false documents.
Section 10-508	Obscene, threatening or harassing telephone calls.
Section 10-509	Disorderly house.
Section 10-510	Nudity, improper dress, indecent exposure.
Section 10-511	Gambling and gambling devices.

Section 10-512 Prostitution prohibited.
Section 10-513 Offenses near schools.
Section 10-514 Sleeping in places, property.
Section 10-515 Contributing to delinquency of a minor.
Section 10-516 Tobacco to minor prohibited.
Section 10-517 Curfew for minors--violations--exceptions--defenses.
Section 10-518 Furnishing tobacco products to minors prohibited.
Section 10-519 Purchase and possession of tobacco products by person under 18 years of age.
Section 10-520 Refusal to compel child to attend school.
Section 10-521 Truancy prohibited
Section 10-522 Penalty

CHAPTER 6

OFFESES AGAINST PUBLIC AUTHORITY

Section 10-601 Escaping custody.
Section 10-602 Conveying instruments to assist escape.
Section 10-603 Assisting prisoner to escape.
Section 10-604 Delivery of articles to person in confinement.
Section 10-605 Assaulting police officer or firefighter.
Section 10-606 Resisting a police officer.
Section 10-607 Citizens' duty to assist.
Section 10-608 Obedience to orders of police and firefighters.
Section 10-609 Eluding police officer by motor vehicle.
Section 10-610 Use of siren or whistle.
Section 10-611 Impersonating a police officer or any city officer.
Section 10-612 False statements, reports, or complaints.
Section 10-613 False alarms.
Section 10-614 Removal of barricades.
Section 10-615 Resisting public officials.
Section 10-616 Duties of the public at fires, emergencies.
Section 10-617 Tampering with signs, equipment.
Section 10-618 Interference with police dog performing functions or duties.
Section 10-619 Destroying, tampering with evidence.

CHAPTER 7

WEAPONS AND FIREARMS

Section 10-701 Definitions.
Section 10-702 Carrying Weapons; exceptions.
Section 10-703 Sale of weapons to and possession of weapons by minors.
Section 10-704 Weapons prohibited in certain places.
Section 10-705 Duty to carry license and disclose possession of concealed weapon.

Section 10-706	Pointing weapon at another.
Section 10-707	Conditions under which firearms may be carried.
Section 10-708	Firearms in vehicles.
Section 10-709	Transporting loaded firearms in vehicles.
Section 10-710	Carrying concealed weapons conditions.
Section 10-711	Carrying weapons under influence of alcohol and drugs.
Section 10-712	Furnishing firearms to mentally incapacitated or insane persons.
Section 10-713	Reckless conduct.
Section 10-714	Selling or transferring firearms to certain persons prohibited.
Section 10-715	Discharging firearms, air rifles, BB guns, pellet guns – exceptions.

CHAPTER 1

GENERAL PROVISIONS

Section 10-101	Attempts to commit an offense.
Section 10-102	Aiding in an offense.
Section 10-103	"Offense" defined.
Section 10-104	"Violation" defined.
Section 10-105	Penalty not to excuse offense.
Section 10-106	Capacity to commit offense.
Section 10-107	Intoxication, no defense.
Section 10-108	Witness, self incrimination.
Section 10-109	Nuisances.
Section 10-110	Conspiracy.
Section 10-111	Limitations of actions.
Section 10-112	Lawful use of force.

SECTION 10-101 ATTEMPTS TO COMMIT AN OFFENSE.

Every person who attempts to commit an offense against the ordinances of the city, and in such attempt does any act toward the commission of such offense, but fails or is prevented or intercepted in the perpetration thereof, is guilty of an offense, and shall be punished in the manner prescribed for the attempted offense itself. (Prior Code, Chapter 14, as amended)

SECTION 10-102 AIDING IN AN OFFENSE.

When no punishment for counseling or aiding in the commission of a particular offense is expressly prescribed by ordinance, every person who counsels or aids another in the commission of such is guilty of an offense, or misdemeanor, and punishable in the same manner as the principal offender. (Prior Code, Chapter 14, as amended)

SECTION 10-103 "OFFENSE" DEFINED.

The word "offense," whenever used in this code or in any part, chapter, article or ordinance of the city means the unlawful act of doing, or failing to do, some particular act or thing construed therein to be detrimental to the general welfare, morals, peace, health or safety of the inhabitants of the city.

SECTION 10-104 "VIOLATION" DEFINED.

The doing of any of the acts or things prohibited, or failing to do any of the acts or things commanded to be done, as more fully specified and set forth by any provision of this code or any part, chapter or article hereof, or future ordinances of the city, is hereby declared to be an offense against the good order, public peace, morals, health, proper government and welfare of the city and unlawful.

SECTION 10-105 PENALTY NOT TO EXCUSE OFFENSE.

The imposition of one penalty for an offense shall not excuse it or permit it to continue, nor prevent the imposition of further penalties, should the offenses be continued or permitted to continue.

SECTION 10-106 CAPACITY TO COMMIT OFFENSE.

All persons are capable of committing an offense as herein provided, except those belonging to the classes following:

1. Children under the age of seven (7) years;

2. Children over the age of seven (7) years, but under the age of fourteen (14) years, in the absence of proof that at the time of committing the act or neglect charged against them, they knew its wrongfulness;

3. Lunatics, insane persons, and all persons of unsound mind, including persons temporarily or partially deprived of reason, upon proof that at the time of committing the act charged against them they were involuntarily incapable of knowing its wrongfulness;

4. Persons who committed the act, or made the omission charged, under an ignorance or mistake of fact which disproves any criminal intent. But ignorance of the law does not excuse from punishment for its violation;

5. Persons who committed the act charged without being conscious thereof, involuntarily; and

6. Persons who committed the act, or made the omission charged, while under involuntary subjection to the power of superiors.

SECTION 10-107 INTOXICATION, NO DEFENSE.

No act committed by any person while in a state of intoxication, whether from liquor or drugs, shall be deemed less an offense by reason of his being in such condition.

SECTION 10-108 WITNESS, SELF INCRIMINATION.

No person otherwise competent as a witness, shall be incapacitated, excused or disqualified from testifying concerning the offense mentioned in any section, chapter or title of this code, or any ordinances hereafter enacted on the ground that his testimony might incriminate him, but the testimony which may be given by such witness shall in no case be used against him.

SECTION 10-109 NUISANCES.

It is unlawful and an offense for any person to permit, maintain, aid, abet, or sanction a nuisance on or about any premise or premises owned by him or under his control at any place within the corporate limits of the city.

Cross Reference: Nuisances, Secs. 8-101 et seq. of this code.

SECTION 10-110 CONSPIRACY.

Any two (2) or more persons assembled or who shall assemble with the intent to mutually agree to do any unlawful act with force or violence and shall make any movement therefor against the property of the city or the person or property of another person shall be guilty of an offense.

SECTION 10-111 LIMITATIONS OF ACTIONS.

The time within which a charge may be filed under the provisions of this chapter shall be one year from the date of the commission or omission or in cases involving fraud, deception or deceit, one year from the discovery of the fraud, deception or deceit unless otherwise provided by the statutes of the state.

SECTION 10-112 LAWFUL USE OF FORCE.

A. To use or to attempt to offer to use force upon or toward the person of another is not unlawful in the city in the following cases:

1. When necessarily committed by a public officer in the performance of any legal duty, or by any other person assisting him or acting by his direction;

2. When necessarily committed by any person in arresting one who has committed any felony, and delivering him to a public officer competent to receive him in custody;

3. When committed either by the party about to be injured, or by any other person in his aid or defense, in preventing or attempting to prevent an offense against his person, or any trespass or other unlawful interference with real or personal property in his lawful possession; provided, the force used is not more than sufficient to prevent such offense, and that the same shall be necessary for the self-defense of his person or property;

4. When committed by a parent or authorized agent of any parent, or by any guardian, master or teacher, in the exercise of a lawful authority to restrain or correct his child, ward, apprentice or scholar, provided restraint or correction has been rendered necessary by the misconduct of such child, ward, apprentice or scholar, or by his refusal to obey the lawful command of such parent or authorized agent or guardian, master or teacher, and the force used is reasonable in manner and moderate in degree;

5. When committed by a carrier of passengers, or the authorized agents or servants of such carrier, or by any person assisting them at their request, in expelling from any carriage, interurban car, vessel or other vehicle, any passenger who refuses to obey a lawful and reasonable regulation prescribed for the conduct of passengers, if such vehicle has first been stopped and the force used is not more than is sufficient to expel the offending passenger, with a reasonable regard to his personal safety;

6. When committed by any person in preventing an idiot, lunatic, insane person or other person of unsound mind, including persons temporarily or partially deprived of reason, from committing an act dangerous to himself or to another, or enforcing such restraint as is necessary for the protection of his person or for his restoration to health, during such period only as shall be necessary to obtain legal authority for the restraint or custody of such person;

7. In preventing or interrupting an intrusion upon the lawful possession of property; and

8. To preserve the peace or prevent the commission of an offense.

B. Where force is permitted to effect a lawful purpose only that degree of force necessary to effect such purpose shall be used.

CHAPTER 2

OFFENSES AGAINST PERSONS

Section 10-201 Assault and battery.
Section 10-202 Assault defined.
Section 10-203 Battery defined.
Section 10-204 Reckless conduct.

SECTION 10-201 ASSAULT AND BATTERY.

No person shall commit an assault or battery, or both, upon the person of another. (Prior Code, Chapter 14, as amended)

State Law Reference: Assault and battery generally, 21 O.S. Sec. 641 et seq.; city's power to prevent, 11 O.S. Sec. 22-110.

SECTION 10-202 ASSAULT DEFINED.

An assault is any wilful and unlawful attempt or offer with force or violence to do corporal hurt to another. (Prior Code, Chapter 14, as amended)

SECTION 10-203 BATTERY DEFINED.

A battery is any wilful and unlawful use of force or violence upon the person of another. (Prior Code, Chapter 14, as amended)

SECTION 10-204 RECKLESS CONDUCT.

A. Reckless conduct, as used in this section, consists of an act which creates a situation of unreasonable risk and probability of death or great bodily harm to another and which demonstrates a conscious disregard for the safety of another.

B. It is unlawful for any person to endanger another's safety by reckless conduct in the operation or handling of any weapon or instrument, including a pistol, revolver or other firearm. (Prior Code, Chapter 14, as amended)

Cross Reference: See also Sections 10-701 et seq. on weapons and firearms.

CHAPTER 3

OFFENSES AGAINST PROPERTY

Section 10-301	Petit larceny; embezzlement; shoplifting.
Section 10-302	Larceny by false pretense.
Section 10-303	Altering keys.
Section 10-304	Possession of stolen property.
Section 10-305	Defrauding public accommodations; proof; exception.
Section 10-306	Concealing unpurchased merchandise, merchant's authority to detain.
Section 10-307	Failure to pay fare for public conveyance.
Section 10-308	False or bogus checks.
Section 10-309	Harmful deception.
Section 10-310	Defacing building, damaging property.
Section 10-311	Removing or breaking private property.
Section 10-312	Damaging private property.
Section 10-313	Public works under construction.
Section 10-314	Damaging or tampering with motor vehicle.
Section 10-315	Tampering with or damaging of utilities.
Section 10-316	Destroying trees and shrubbery.
Section 10-317	Trespassing prohibited notice, trespass prohibited.
Section 10-318	Congregating, parking on premises after hours.
Section 10-319	Unlawful intrusion on land.
Section 10-320	Throwing or shooting at persons or property.
Section 10-321	Throwing out lighted substances or debris prohibited.
Section 10-322	Littering, deposits unlawful.
Section 10-323	Posting advertising matter on building of another.
Section10-324	Posting advertising matter on utility poles or on or over streets and sidewalks.
Section10-325	Interference with radio, television or telephone reception of others.
Section10-326	False weights.
Section10-327	Unlawful use of another's garbage or refuse container.
Section10-328	Fireworks prohibited, exceptions.

SECTION 10-301 PETIT LARCENY; EMBEZZLEMENT; SHOPLIFTING.

A. No person shall steal, take and carry away by fraud or stealth, with intent to deprive another thereof, any personal property under the value of Fifty Dollars ($50.00) or embezzle any money, personal property or effects of another under the value of Fifty Dollars ($50.00). This section does not apply to taking property from the "person" of another.

B. If any person conceals unpurchased merchandise of any mercantile establishment, either on the premises or outside the premises of such establishment , there shall be a rebuttable presumption that the person shall have so concealed such merchandise with the intention of committing a wrongful taking of such merchandise within the meaning of this section, and such concealment or the finding of such unpurchased merchandise concealed upon the person or among the belongings of such persons shall be evidence of reasonable grounds and probable cause for the detention in a reasonable manner and for a reasonable length of time, of such person by a merchant, his agent or employee, and any such reasonable detention shall not be deemed to be unlawful, nor render such merchant, his agent or employee criminally or civilly liable. (Prior Code, Chapter 14, as amended)

State Law Reference: Larceny, 21 O.S. Secs. 1701 et seq.; embezzlement, 21 O.S. Secs. 1451 et seq.

SECTION 10-302 LARCENY BY FALSE PRETENSE.

No person shall induce, or attempt to induce, any person to give up or pay over any money or other thing of value which money or value does not exceed Fifty Dollars ($50.00), by any false representation or pretense, or in exchange for any false or bogus coin or check, draft or other false evidence of value, or in consideration of refraining from a lawful or unlawful arrest, or in consideration of refraining from reporting any unlawful act to any public official. (Prior Code, Chapter 14, as amended)

SECTION 10-303 ALTERING KEYS.

No person shall make or alter or attempt to make or alter any key or other instrument that will open the lock of a building unless requested to do so by some person having the right and authority to make such request.

SECTION 10-304 POSSESSION OF STOLEN PROPERTY.

No person shall keep in his possession, or dispose of, or conceal any stolen property, or fail promptly to inform some proper official of the possession thereof, under circumstances indicating that such property had been stolen or the possession thereof obtained unlawfully. (Prior Code, Chapter 14, as amended)

State Law Reference: Receiving stolen property, 21 O.S. Sec. 1713.

SECTION 10-305 DEFRAUDING PUBLIC ACCOMMODATIONS; PROOF; EXCEPTION.

A. No person shall obtain food, lodging or other accommodation in any hotel, motel, inn, boarding, eating or rooming house or place, or any other lodging place, with the intent to defraud the owner or keeper.

B. Proof that lodging, food and other accommodations were obtained by false pretense or fictitious show of any package or other property or that the person gave a check or negotiable paper on which payment was refused or that the person left the hotel, motel, inn, boarding, eating or rooming house or place, or other lodging place, without paying or offering to pay for the food, lodging or other accommodation or that the person surreptitiously removed or attempted to remove the package or property, or that the person registered under a fictitious name shall be prima facie proof of attempt to defraud.

C. No person shall refuse to pay the legal fare of any of the vehicles mentioned in this article after having hired the same, and no person shall hire any vehicle with intent to defraud the person from whom it is hired of the value of such service.

D. This section shall not apply where there has been an agreement in writing for delay in payment. (Prior Code, Chapter 14, as amended)

SECTION 10-306 CONCEALING UNPURCHASED MERCHANDISE; MERCHANT'S AUTHORITY TO DETAIN.

Any person concealing unpurchased merchandise of any establishment, either on the premises or outside the premises of the establishment, shall be presumed to have so concealed the merchandise with the intention of committing a wrongful taking of such merchandise.. Such concealment or the finding of such unpurchased merchandise concealed upon the person or among the belongings of such person shall be conclusive evidence of reasonable grounds and probable cause for the detention in a reasonable manner and for a reasonable length of time of such person by a merchant, his agent or employee; any such reasonable detention shall not be deemed to be unlawful nor render any such merchant, his agent or employee, criminally or civilly liable. (Prior Code, Chapter 14, as amended)

SECTION 10-307 FAILURE TO PAY FARE FOR PUBLIC CONVEYANCE.

No person shall use or accept the use and services of any street car, taxi cab, omnibus, automobile or any other means of public conveyance or passengers, operating under the code, ordinance, franchise, permit or license of the city or state, and refuse or fail to pay to the operator of the conveyance the usual, customary, regulation or legal charge, or price as fare immediately upon the performance of the service. (Prior Code, Chapter 14, as amended)

SECTION 10-308 FALSE OR BOGUS CHECKS.

It is unlawful for any person, with intent to cheat and defraud, to obtain or attempt to obtain from any person any money, property or valuable thing by means of any false or bogus check or by any other written or printed or engraved instrument or spurious coin in such amounts as authorized by state law to be enforced as a misdemeanor. The term "false or bogus check" shall include checks or orders given for money or property which are not honored on account of insufficient funds of the maker to pay same, as against the maker or drawer thereof. The making, drawing, issuing or delivering of a check, draft or order, payment of which is refused by the drawee, shall be prima facie evidence of intent to defraud and the knowledge of insufficient funds in or credit with, such bank or other depository. Such maker or drawer shall not have paid the drawee the amount due thereon, together with the protest fees, and the check or order shall be presented for payment within thirty (30) days after same is delivered and accepted. (Prior Code, Chapter 14, as amended)

SECTION 10-309 HARMFUL DECEPTION.

It is unlawful for any person knowingly to deceive another, whether by impersonation, misrepresentation, or otherwise, when such deception results in or contributes to the loss, damage, harm or injury of the person deceived or of a third party, or results in or contributes to the benefit of the deceiver. (Prior Code, Chapter 14, as amended)

SECTION 10-310 DEFACING BUILDING, DAMAGING PROPERTY.

A. No person shall purposely deface or damage any public or private building or appurtenances thereof, or any fence, street, bridge, sidewalk, driveway, street, or public work.

B. No person shall:

1. Destroy, injure, deface, damage or molest any structure, building, work or other

property, real or personal, belonging to another;

2. Use such property wrongfully to the detriment of the owner or other person entitled to its use; or

3. Interfere wrongfully with the use of any such property by its owner or any other person entitled to its use.
(Prior Code, Chapter 14, as amended)

State Law Reference: Destroying property generally, 21 O.S. Sec. 1760.

SECTION 10-311 REMOVING OR BREAKING PRIVATE PROPERTY.

No person shall wilfully, unlawfully or maliciously take and carry or cause to be taken and carried away any part of a house, barn, fence, gate or other structure, or maliciously break, tear down or destroy any part of a house, barn or other structure not his own.

SECTION 10-312 DAMAGING PRIVATE PROPERTY.

No person shall wilfully and wantonly damage or destroy the personal property of another.

SECTION 10-313 PUBLIC WORKS UNDER CONSTRUCTION.

A. Any person who removes, destroys, disturbs, or in any manner injures any grade stake, stone or other mark or monument set by or under authority of the city to designate or mark grades, lines, corners or bench marks on any public work in the city prior to the completion and acceptance of the contract for which such stakes or monuments are set, without lawful authority, is guilty of an offense.

B. Any contractor or other person constructing any public work in the city shall protect such work by barriers or obstructions. It is unlawful for any person to cross the barriers or to remove them until the work has been completed and opened by authority of the city.

SECTION 10-314 DAMAGING OR TAMPERING WITH MOTOR VEHICLE.

A. No person, other than a peace officer in the performance of his official duties, shall, with intent and without right to do so, injure or tamper with any vehicle or in any other manner damage any part or portion of the vehicle or any accessories, appurtenances or attachments thereto.

B. No person, other than a peace officer in the performance of his official duties, shall, without right to do so and with intent to commit a crime, climb into or upon a vehicle, whether it is in motion or at rest, attempt to manipulate any of the levers, starting mechanism, brakes or other mechanism or device of the vehicle while the vehicle is at rest and unattended, or set in motion any vehicle while the vehicle is at rest and unattended. (Prior Code, Chapter 14, as amended)

State Law Reference: Damaging motor vehicles, 21 O.S. Secs. 1787, 1788.

SECTION 10-315 TAMPERING WITH OR DAMAGING OF UTILITIES.

A. No person shall alter, remove, tamper with, molest, damage or injure any wires,

cable, appurtenance, structure, pipes or equipment of any utility of the city, or any public utility, or connect or tamper with the wires, cables or pipes of any electric, water, sewer, cable television or gas utility or of the city without consent of the utility or city having been first obtained.

B. It is unlawful to open up any manhole or opening to a sewer unless authorized by the city, or to leave a manhole or other opening so opened without replacing the fixture or appliances thereto in their proper place and position.

C. No person except a member of the fire department or a person acting on lawful order or permit issued by the city shall open or use water from any fire hydrant or take off the caps or damage the same. No person may block the approach or access to a fire hydrant or attach, fasten, stand or brace anything against or on the hydrant.

D. No person shall in any manner whatsoever:

1. Cut into, attach to or intercept the wires, cables or pipes, of any electric, water, cable television or gas utility or of the city for the purpose of fraudulently taking therefrom electric current, water, transmissions or gas;

2. Cut into, attach to or intercept the wires, cables or pipes for the purpose of conducting around any meter electric current, water or gas in order to prevent the current, water or gas from being measured by the meter, or in such other manner so as to consumer or use the utility or cable service so as to evade payment therefor, with the unlawful intent to defraud the company or city out of the value of the service; or

3. By any device or manipulation whatsoever to cause current, transmissions, water or gas used upon any premises to be fraudulently conveyed upon any premises for the purposes of use thereof, and with the intent to defraud and cheat the utility or city from payment thereof.

E. Each day that any person maintains any such fraudulent connection with any wires, cables or pipes, or fraudulently takes from any such wires, cables or pipes either electric current, transmissions, water or gas shall constitute a separate offense. (Prior Code, Chapter 14, as amended)

Cross Reference: Utilities, see Secs. 17-101 et seq. of this code.

SECTION 10-316 DESTROYING TREES AND SHRUBBERY.

A. No person shall willfully, maliciously and without lawful authority cut down, root up, sever, injure or destroy any fruit tree, shade or ornamental tree, cultivated root or plant, grape or strawberry vine, shrub or plant whatever standing on or attached to the land of another, or pick, destroy, carry away therefrom, or in any way interfere therewith, any of the fruit thereof.

B. No person shall willfully or without lawful authority cut down, destroy, root up or in any manner injure any fruit, shade or ornamental tree, shrub or vine planted or growing on any street, land, avenue, alley or other public ground of the city.

SECTION 10-317 TRESPASSING PROHIBITED, NOTICE, SOLICITING, TRESPASS PROHIBITED.

A. It is unlawful and an offense for any person to commit a trespass within this city

upon either public or private property.

B. Trespass shall include each and every actual entry upon the premises of an owner or other person in lawful possession of the premises without the express consent of the owner or other person in lawful possession. Trespass shall also mean remaining upon the premises of an owner or other person in lawful possession after having been told to leave the premises by the owner, or the agent, or employee of the owner or other person in lawful possession of the premises. Trespass shall also mean the act of entering upon or remaining on private property when such is plainly forbidden by signs, markings, or otherwise, by verbal command of the owner, his agent, or employee, of after having been directed to do so by a police officer, although this sentence shall not apply to persons including employees whose presence upon the premises is authorized by the owner or by a person in lawful possession of such premises. Trespass shall also include the act of returning to private property after having been directed to vacate the premises by the owner, his agent, employee or police officer under the terms of this section.

C. Any of the following acts by any person shall be deemed a violation of this section:

1. The doing of an injury or misfeasance to the person of another;

2. The doing of any injury or misfeasance to the property of another when done with force and violence, either actual or implied;

3. Each and every actual entry upon the premises of another owner or person in possession of real property, whether the property is public or private, without the owner's or occupant's consent, express or implied;

4. An entry upon the premises, or any part thereof, of another in violation of a notice exhibited thereon prohibiting entry at specified times;

5. An entry upon the premises, or any part thereof, of another in violation of any notice, warning or protest given orally or in writing by any owner or other lawful occupant thereof;

6. An entry upon any public property, including parks or parking areas, in violation of a notice exhibited there prohibiting entry at specified times;

7. An entry upon any public property in violation of any notice, warning or protest given orally or in writing by a city official;

8. If on the property of another, or upon public property lawfully, a failure or refusal to depart in case of being requested to so depart orally or written, by any owner, lawful occupant, or by a city official;

9. An entry upon any portion of a public park, where the entry involves the use of any vehicle, equipment or device where such use is specifically prohibited;

10. An entry of any public building except for the purpose of dispatching business with the public corporation or consent is obtained from the city council or other public official which is lawfully authorized to give consent; or

11. Remaining on public or private property at any time other than during posted hours of business operation after having been directed to vacate such premises by a police officer. The

provisions of this paragraph shall not apply to persons, including employees, whose presence upon such premises is authorized by the owner or by a person in lawful possession of such premises; nor shall the provisions of this paragraph apply unless hours of business operation are posted upon such premises. Trespass also includes the act of returning to private property before the posted time of opening for business operation on the next business day after having been directed to vacate such premises under the terms of this paragraph.

D. For purposes of constituting a violation of this section, the exhibited notice required under paragraphs 4, 5, 6, 7 and 9 of Subsection C hereof shall meet the following criteria:

1. The notice shall be plainly posted in a place or places conspicuous to those who would enter the property;

2. The notice shall be legible so as to afford reasonable warning prior to the commission of a trespass; and

3. If upon property to which the public is invited at least some part of the day, the notice shall clearly specify the days and times of day entry is prohibited, and further specify that entry at such times constitutes a punishable offense under the city code.

(Prior Code, Chapter 14, as amended)

SECTION 10-318 CONGREGATING, PARKING ON PREMISES AFTER HOURS.

A. No person shall stand, walk, sit, lie, congregate or otherwise occupy or remain upon the premises of any place or business within the city after business hours without consent of the lawful owner, occupant, lessee or employee thereof.

B. No person shall stop, stand, park, leave, or place any motor vehicle, whether occupied or not, upon any public or private property without the consent of the owner, occupant, lessee or employee thereof, except where such property is provided for public parking and the use for such parking is not restricted by proper notice. In addition to fine or other punishment for a violation of this subsection, the vehicle so parked, left or placed shall be subject to impoundment upon complaint of the property owner or lawful occupant; the person violating this subsection shall be wholly responsible for payment of towage and storage charges.

C. No person may be charged under this section unless the premises in question is posted with a conspicuous sign which states, substantially, that the premises are posted, and that any person congregating, occupying or remaining upon the premises or parking or leaving a motor vehicle thereon, is subject to prosecution pursuant to the city code.

D. When used in this section, the term "after business hours" shall mean that the doors of the business which are open to the public during business hours are closed and locked and that the business is no longer admitting customers. The term applies to places of business which are vacant or permanently or temporarily closed or otherwise unoccupied. The term "place of business" means any private property upon which a building, house or other structure is used for commercial or public purposes, e.g., without limitation, restaurants, gas stations, shopping malls or centers, theaters, convenience stores, grocery stores, drug stores or pharmacies, recreational facilities, wholesale or retail sales activities, offices, banks or other financial institutions, manufacturing, professional services (medical, legal, accounting, insurance, consulting).

E. There is a rebuttable presumption that any person or motor vehicle upon the premises of a place of business that is properly posted pursuant to this section after such time as the front door or other such door that admits members of the public is closed and locked is on the premises of such business unlawfully under this section; however, this presumption shall not be applied within thirty (30) minutes of any opening or closing times posted by such place of business. This presumption may only be rebutted by proof beyond a reasonable doubt that any person held by the municipal judge to be subject to this rebuttable presumption was on the premises in question with permission of the lawful owner, occupant, lessee or employee thereof.

F. If a motor vehicle is alleged to be unlawfully parked or left under this section, it shall be rebuttably presumed that the person in whose name the motor vehicle was last registered was the person who parked or left the motor vehicle.

G. The parking or leaving of a motor vehicle as set forth herein shall constitute the offense of unlawful parking or leaving a motor vehicle after business hours, punishable as provided in Section 1-108 of this code.

H. If a person violates Subsection A of this section, it shall constitute the offense of unlawful presence on property after business hours or congregating after business hours and is punishable as provided in Section 1-108 of this code.

I. The provisions of this section are cumulative of other applicable offenses enacted in this code or state law. (Prior Code, Chapter 14, as amended)

Cross Reference: See also Section 15-608 on vehicular trespass.

SECTION 10-319 UNLAWFUL INTRUSION ON LAND.

A. No person shall intrude or remain upon any lot or piece of land, or in any building within the city without license or authority from the owner thereof, or erect or occupy thereon any structure whatever without such license or authority.

B. No person shall place, erect or occupy within the bounds of any street, alley or avenue of the city any structure whatever unless such person is granted a license by the city to do so.

SECTION 10-320 THROWING OR SHOOTING AT PERSONS OR PROPERTY.

No person shall throw or shoot any object into or across any street or alley, or in any place where he is likely to hit another person wrongfully, or injure property, or to throw any object at any person, vehicle, structure, or property of another, whether public or private, except where such is done in defense of oneself or another person or property. (Prior Code, Chapter 14, as amended)

SECTION 10-321 THROWING OUT LIGHTED SUBSTANCES OR DEBRIS PROHIBITED.

No person shall throw, drop, deposit or otherwise place in, upon or within the limits of any street, avenue, public ground, public waterway or city-owned property or waterway any lighted cigarette, cigar or other flaming or glowing substances, or any substance or thing which may cause a fire.

SECTION 10-322 LITTERING, DEPOSITS UNLAWFUL.

It is unlawful to throw, deposit or discharge any item or waste material, liquid or solid, on any street or public place in the city or upon the property of another without express authority to do so.

SECTION 10-323 POSTING ADVERTISING MATTER ON BUILDING OF ANOTHER.

A. No person shall place upon any building any advertising matter of any kind, nor print or exhibit printing on a building or any part thereof, in words, signs or characters, except with the express consent of the owner, lessee or authorized agent of the owner of the building.

B. No person shall place, post, paint, mark, write, print or put any sign, poster, picture, announcement, writing, device, advertisement or other marking upon any public or private building, fence, sidewalk, bridge, post, automobile or vehicle or property of another without the consent of the owner or person in charge thereof. (Prior Code, Chapter 14, as amended)

SECTION 10-324 POSTING ADVERTISING MATTER ON UTILITY POLES OR ON OR OVER STREETS AND SIDEWALKS.

It is unlawful for any person to place any advertising matter of any kind on any utility pole, or to place any advertising on the streets or sidewalks of the city or to place any advertising on any signs or banners stretched over the streets or sidewalks of the city. Nothing herein shall be construed to prevent any permanently located commercial or business establishment in the city from erecting and maintaining business or commercial signs in accordance with the ordinances of the city, nor to prohibit the granting of permission by the city to religious, charitable, patriotic or civic bodies to use banners across the streets of the city in such places as may be designated by the city administrator for the observance of holidays, charitable drives and the commemoration and celebration of other public or civic occasions.

Cross Reference: See also Section 15-209 prohibiting signs on official traffic signs and political signs.

SECTION 10-325 INTERFERENCE WITH RADIO, TELEVISION OR TELEPHONE RECEPTION OF OTHERS.

It is unlawful for any person, or any officer or employee of any person, to operate or use any citizen band radio, ham radio or other electrical apparatus or machine which materially and unduly interferes with radio, television or telephone reception of others. (Prior Code, Chapter 14, as amended)

SECTION 10-326 FALSE WEIGHTS.

It is unlawful for any person to sell any commodity or article of merchandise and in the sale thereof knowingly make or give a false or short weight therefor or for any person owning or keeping or having in charge any scale used in weighing any animal, commodity or article to knowingly and wilfully report any false or untrue weight whereby another person shall be defrauded or damaged. (Prior Code, Chapter 14, as amended)

SECTION 10-327 UNLAWFUL USE OF ANOTHER'S GARBAGE OR REFUSE CONTAINER.

It is unlawful and an offense for any person to dispose of garbage, refuse, rubbish or waste into any refuse container, dumpster or other receptacle for the deposit of same belonging to or leased by another, whether by rental agreement, lease or agreement with the city or a public or private trash, garbage or refuse hauling service, without the permission of the owner, lessee or other person entitled to the possession or use thereof. (Prior Code, Chapter 14, as amended)

SECTION 10-328 FIREWORKS PROHIBITED, EXCEPTIONS.

A. For the purpose of this section, "fireworks" shall have the same meaning as in state law, Section 1621 et seq of Title 68 of the Oklahoma Statutes.

B. It is unlawful for any person to manufacture, display, sell, possess for sale, or use fireworks within the city except as provided in this section.

C. Pyrotechnic or fireworks displays may be authorized in accordance with the city fire code when under proper control and the time, place and manner of the display is permitted by the city. (Prior Code, Sec. 8-7)

Cross Reference: See also Section 5-601 et seq, fire code.

CHAPTER 4

OFFENSES AGAINST PUBLIC PEACE

Section 10-401 Disturbing the peace.
Section 10-402 Disturbing funerals.
Section 10-403 Disorderly conduct.
Section 10-404 Unnecessary noise prohibited.
Section 10-405 Parades and public assemblies.

SECTION 10-401 DISTURBING THE PEACE.

A. It is unlawful to disturb or alarm the peace of another or others by doing any of the acts set out in Subsection B of this section.

B. Disturbing the peace is the doing of any of the following in such a manner as would foreseeably alarm or disturb the peace of another or others:

1. Using obscene, offensive, abusive, profane, vulgar, threatening, violent or insulting language or conduct;

2. Appearing in an intoxicated condition;

3. Engaging in a fistic encounter;

4. Lewdly exposing one's person, or private parts thereof, in any public place or in any place where there are present other persons to be offended or annoyed thereby;

5. Pointing any pistol or any other deadly weapon whether loaded or not at any other person or persons either in anger or otherwise;

6. Holding an unlawful assembly of two (2) or more persons, including being assembled together and acting in concert, to do any unlawful act against the peace or to the terror of others or preparing for or moving toward such acts, or otherwise assembling unlawfully or riotously;

7. Interrupting any lawful assembly of people by making noise, by rude, indecent or improper behavior, by profane, improper or loud language, or in any other manner, either within the place of assembly or within hearing distance thereof;

8. Obstructing the free passage of pedestrians or vehicles on a street, right-of-way or sidewalk, or other public place;

9. Obstructing, molesting or interfering with any person lawfully in a public place;

10. Making unnecessarily loud, offensive noises;

11. Disturbing any congregation or assembly of persons meeting for religious worship by making noise, by rude, indecent or improper behavior, by profane, improper or loud language, or in any other manner, either within the place of worship or within hearing distance thereof; or

12. Committing any other act in such a manner calculated as to unreasonably disturb, interfere or alarm the public or the comfort and repose of any person.

C. Whenever any police officer shall, in the exercise of reasonable judgment, decide that the presence of any person in any public place is causing any of the conditions enumerated in Subsection A herein, he may, if he deems it necessary for the preservation of the public peace and safety, order that person to leave that place; and any who shall refuse to leave after being ordered to do so by a police officer shall be guilty of a violation of this section.

D. This section shall not apply to peaceful picketing, public speaking or other lawful expressions of opinion not in contravention of other laws. (Prior Code, Chapter 14, as amended)

SECTION 10-402 DISTURBING FUNERALS.

No person shall willfully disturb, interrupt or disquiet any assemblage of people who have met for the purpose of any funeral, or obstruct or detain any person engaged in accompanying any funeral to a place of burial.

SECTION 10-403 DISORDERLY CONDUCT.

A person shall be guilty of disorderly conduct if, with the intent to cause public inconvenience, annoyance, alarm or recklessly creating the risk thereof he:

1. Acts in a violent or tumultuous manner toward another whereby any person is placed in fear of safety of his life, limb or health;

2. Acts in a violent or tumultuous manner toward another whereby the property of any person is placed in danger of being destroyed or damaged;

3. Endangers the lawful pursuits of another by acts of violence, angry threats and abusive conduct;

4. Jostles or crowds or pushes any person in any public place;

5. Uses "fighting words" directed toward any person and thus creates a turmoil;

6. Causes, provokes or engages in any fight, brawl or riotous conduct so as to endanger the life, limb, health or property of another; or

7. By acts of violence interferes with another's pursuit of a lawful occupation.

State Law Reference: Power of city relating to disorderly conduct, 11 O.S. Sec. 22-110.

SECTION 10-404 UNNECESSARY NOISE PROHIBITED.

A. No person shall make, continue or cause to be made or continued any excessive, unnecessary or unusually loud noise or any noise which either annoys, disturbs, injures or endangers the comfort, repose, health, peace or safety of others, within the limits of the city.

B. Permits may be granted by the city for certain activities and events which are exempt from the provisions of this section. (Prior Code, Chapter 14, as amended)

State Law Reference: City's power to restrain and prohibit unnecessary noise, 11 O.S. Sec. 22-110.

SECTION 10-405 PARADES AND PUBLIC ASSEMBLIES.

A. As used in this section, "parade" means any parade, march, ceremony, show, demonstration, exhibition, pageant or procession of any kind, or any similar display, in or upon any street, park or other public place in the city.

B. No person shall use any street, alley, public way, park or other property owned or controlled by the city, except those places specifically designed and intended for such use, for the purpose of holding, conducting, causing or participating in any parade, street fair, street dance, carnival, assemblage or activity of any nature which may cause the disturbance or interference of the normal and ordinary use of the property by other persons, without first having obtained a permit for such purpose. The permits may be granted by the city administrator under such conditions as deemed appropriate.

C. Permits shall not be required under this section in the case of construction or repairs to or within any such street or property, provided all other requirements of this code are complied with.

D. Not less than one week prior to the closing or use of a street or property for a parade, an application shall be submitted by the party to the city. The time requirements may be waived by the city administrator at his discretion if sufficient time exists for the proper review of the application as herein provided. The application shall be submitted upon a form prescribed by the city. The application shall provide such other information as requested.

E. The city administrator shall issue a permit as provided for hereunder when, from a consideration of the application and from such other information as may otherwise be obtained, he finds that:

1. The conduct of the parade will not substantially interrupt the safe and orderly movement of other traffic contiguous to its route;

2. The conduct of the parade will not require the diversion of so great a number of police officers of the city to properly police the line of movement and the areas contiguous thereto as to prevent normal police protection to the city;

3. The conduct of such parade will not require the diversion of so great a number of ambulances as to prevent normal ambulance service to portions of the city other than that to be occupied by the proposed line of march and areas contiguous thereto;

4. The concentration of persons, animals and vehicles at assembly points of the parade will not unduly interfere with proper fire and police protection of, or ambulance service to, areas contiguous to such assembly areas;

5. The conduct of such parade will not interfere with the movement of firefighting equipment en route to a fire;

6. The conduct of the parade is not reasonably likely to cause injury to persons or property, to provoke disorderly conduct or create a disturbance; and

7. The parade is scheduled to move from its point of origin to its point of termination expeditiously and without unreasonable delays en route.

F. The city administrator, in such cases as shall be determined in his discretion, may require as a condition to the issuance of a permit herein such insurance or bond holding the city harmless from any and all liability for injury or damage of any kind whatsoever occurring during such activity covered by the permit.

G. Without regard to the above provision of this division, the city administrator, from his consideration of available, appropriate and necessary information, shall deny the application for a permit provided for by this chapter when, from this information, he has reason to believe that any contemplated advocacy at the proposed event will be directed to inciting or producing imminent lawless action and will likely incite or produce such action.

H. The city administrator, in denying an application for a parade permit, may authorize the conduct of the parade on a date, at a time or over a route different from that named by the applicant. An applicant desiring to accept an alternate permit shall so indicate within five (5) days after notice of the action of the city administrator. An alternate parade permit shall conform to the requirements of, and shall have the effect of, a parade permit under this section.

State Law Reference: Power of local authorities to regulate assemblies, 47 O.S. Sec. 15-102.

Cross Reference: Funeral processions, Sec. 15-524.

CHAPTER 5

OFFENSES AGAINST THE PUBLIC

Section 10-501	Public intoxication.
Section 10-502	Marijuana prohibited.
Section 10-503	Drug paraphernalia.
Section 10-504	Sniffing glue, paint and other substances.
Section 10-505	False representation as blind, crippled or physically defective to obtain money, aid.
Section 10-506	Prowling on premises.
Section 10-507	Misrepresenting age by false documents.
Section 10-508	Obscene, threatening or harassing telephone calls.
Section 10-509	Disorderly house.
Section 10-510	Nudity, improper dress, indecent exposure.
Section 10-511	Gambling and gambling devices.
Section 10-512	Prostitution prohibited.
Section 10-513	Offenses near schools.
Section 10-514	Sleeping in places, property.
Section 10-515	Contributing to delinquency of a minor.
Section 10-516	Tobacco to minor prohibited.
Section 10-517	Curfew for minors--violations--exceptions--defenses.
Section 10-518	Furnishing tobacco products to minors prohibited.
Section 10-519	Purchase and possession of tobacco products by person under 18 years of age.
Section 10-520	Refusal to compel child to attend school.
Section 10-521	Truancy prohibited
Section 10-522	Penalty

SECTION 10-501 PUBLIC INTOXICATION.

No person shall be in any public place in a state of intoxication. A state of intoxication means the condition in which a person is under the influence of drugs, intoxicating liquors or nonintoxicating beverage to such an extent as to deprive the person of his full mental or physical power or be unable to exercise care for his own safety or the safety of others.

State Law Reference: Drunkards and drunkenness generally, 63 O.S. Secs.2101, et seq.; intoxication in a public place or at a public gathering, 37 O.S. Sec. 8.

Cross Reference: Drinking in public place, see Secs. 3-109 and 3-211 of this code; alcoholic beverages generally, Secs. 3-101 et seq. of this code.

SECTION 10-502 MARIJUANA PROHIBITED.

A. It is unlawful for any person:

1. To appear or be upon or in any street, alley, place of business, or other public place while under the influence of marijuana;
2. To use, have, or possess marijuana upon or in any street, alley, place of business, or other public place within the city;
3. To use marijuana in any place within the city exept as legally prescribed bu a physician licensed to practice in the state; or
4. To be about a place where marijuana is sold or furnished illegally.

B. For the purpose of this section, "marijuana" means all parts of the plant cannabis sativa L., whether growing or not; the seeds thereof; the rosin extracted from any part of such plant; and every compound, manufacture, salt, derivative, mixture, or preparation of such plant, its seeds or rosin but shall not include the mature stalks of such plant, fibre produced from such stalks, oil or cake made from the derivative, mixture or preparation of such mature stalks (except rosin extracted therefrom), fibre, oil or cake, or the sterilized seed of such plant which is incapable of germination. (Prior Code, Chapter 14, as amended)

State Law Reference: Controlled Dangerous Substances Act, 63 O.S. Secs. 2-101, et seq.

SECTION 10-503 DRUG PARAPHERNALIA.

A. For the purpose of this section, "drug paraphernalia" means all equipment, products and materials of any kind which are used, intended for use, or designed for use, in planting, propagating, cultivating, growing, harvesting, manufacturing, compounding, converting, producing, processing, preparing, testing, analyzing, packaging, repackaging, storing, containing, concealing, injecting, ingesting, inhaling or otherwise introducing into the human body a controlled substance in violation of the state Uniform Controlled Dangerous Substances Act, Sections 2-101 et seq. of Title 63 of the Oklahoma Statutes, hereinafter referred to as "the act," and adopted by reference herein. It includes, but is not limited to:

1. Kits used, intended for use, or designed for use in planting, propagating, cultivating, growing or harvesting of any species of plant which is a controlled substance or from which a controlled substance can be derived;

2. Kits used, intended for use, or designed for use in manufacturing, compounding, converting, producing, processing, or preparing controlled substances;

3. Isomerization devices used, intended for use, or designed for use in identifying, or in analyzing the strength, effectiveness or purity of controlled substances;

4. Testing equipment used, intended for use, or designed for use in identifying, or in analyzing the strength, effectiveness or purity of controlled substances;

5.Scales and balances used, intended for use, or designed for use in weighing or measuring controlled substances;

6. Diluents and adulterants, such as quinine hydrochloride, mannitol, mannite, dextrose and lactose, used, intended for use, or designed for use in cutting controlled substances;

7. Separation gins and sifters used, intended for use, or designed for use in removing twigs and seeds from, or in otherwise cleaning or refining, marijuana;

8. Blenders, bowls, containers, spoons and mixing devices used, intended for use, or designed for use in compounding controlled substances;

9. Capsules, balloons, envelopes and other containers used, intended for use, or designed for use in packaging small quantities of controlled substances;

10. Containers and other objects used, intended for use, or designed for use in storing or concealing controlled substances;

11. Hypodermic syringes, needles and other objects used, intended for use, or designed for use in parenterally injecting controlled substances into the human body; and

12. Objects used, intended for use, or designed for use in ingesting, inhaling, or otherwise introducing marijuana, cocaine, hashish, or hashish oil into the human body, such as:

a. Metal, wooden, acrylic, glass, stone, plastic, or ceramic pipes with or without screens, permanent screens, hashish heads, or punctured metal bowls;

b. Water pipes;

c. Carburetion tubes and devices;

d. Smoking and carburetion masks;

e. Roach clips: meaning objects used to hold burning materials, such as a marijuana cigarette, that has become too small or too short to be held in the hand;

f. Miniature cocaine spoons, and cocaine vials;

g. Chamber pipes;

h. Carburetor pipes;

i. Electric pipes;

j. Air-driven pipes;

k. Chillums;

l. Bongs; or

m. Ice pipes or chiller.

B. In determining whether an object is drug paraphernalia, a court or other authority should consider, in addition to all other logically relevant factors, the following:

1. Statements by an owner or by anyone in control of the object concerning its use;

2. Prior convictions, if any, of an owner, or of anyone in control of the object, under any state or federal law relating to any controlled substance;

3. The proximity of the object, in time and space, to a direct violation of the act;

4. The proximity of the object to controlled substances;

5. The existence of any residue of controlled substances on the object:

6. Direct or circumstantial evidence of the intent of an owner, or of anyone in control of the object, to deliver it to persons whom he knows, or should reasonably know, intended to use

the object to facilitate a violation of the act; the innocence of an owner, or of anyone in control of the object, as to a direct violation of the act shall not prevent a finding that the object is intended for use, or designed for use as drug paraphernalia;

7. Instructions, oral or written, provided with the object concerning its use;

8. Descriptive materials accompanying the object which explain or depict its use;

9. National and local advertising concerning its use;

10. The manner in which the object is displayed for sale;

11. Whether the owner, or anyone in control of the object, is a legitimate supplier of like or related items to the community, such as a licensed distributor or dealer of tobacco products;

12. Direct or circumstantial evidence of the ratio of sales of the object(s) to the total sales of the business enterprise;

13. The existence and scope of legitimate uses for the object in the community; and

14. Expert testimony concerning its use.

C. It is unlawful for any person to use, or to possess with intent to use, drug paraphernalia to plant, propagate, cultivate, grow, harvest, manufacture, compound, convert, produce, process, prepare, test, analyze, pack, repack, store, contain, conceal, inject, ingest, inhale, or otherwise introduce into the human body a controlled substance in violation of the act.

D. It is unlawful for any person to deliver, possess with intent to deliver, or manufacture with intent to deliver, drug paraphernalia, knowing, or under circumstances where one reasonably should know, that it will be used to plant, propagate, cultivate, grow, harvest, manufacture, compound, convert, produce, process, prepare, test, analyze, pack, repack, store, contain, conceal, inject, ingest, inhale, or otherwise introduce into the human body a controlled substance in violation of the act.

E. It is unlawful for any person to place in any newspaper, magazine, handbill, or other publication any advertisement, knowing, or under circumstances where one reasonably should know, that the purpose of the advertisement, in whole or in part, is to promote the sale of objects designed or intended for use as drug paraphernalia.

State Law Reference: Similar provisions, 63 O.S. Sec. 2-101.1

SECTION 10-504 SNIFFING GLUE, PAINT AND OTHER SUBSTANCES.

No person shall sniff or inhale paint, glue, gasoline or other volatile substances for purposes of intoxication.

SECTION 10-505 FALSE REPRESENTATION AS BLIND, CRIPPLED OR PHYSICALLY DEFECTIVE TO OBTAIN MONEY, AID.

No person shall falsely represent himself as blind, deaf, dumb, crippled or physically defective for the purpose of obtaining money or other things of value, or to secure aid or

assistance on account of such false representation.

State Law Reference: Offense against public morals being a misdemeanor, 21 O.S. Sec. 22; public decency generally, 21 O.S. Secs. 22.851, et seq.

SECTION 10-506 PROWLING ON PREMISES.

No person shall be upon the property or premises of another with the intent to peer or peep into the window or door of the dwelling.

State Law Reference: Peeping toms generally, 21 O.S. Sec. 1171.

SECTION 10-507 MISREPRESENTING AGE BY FALSE DOCUMENTS.

No person shall, for the purpose of violating any statutes of the state or any ordinances of the city, willfully and knowingly misrepresent his age by presenting a false document purporting to state his true age or by presenting a document not his own.

State Law Reference: Misrepresentation of age by false documents, 21 O.S. Secs. 1518-1520.

Cross Reference: Misrepresentation of age by false or altered documentation for purpose of obtaining alcoholic and nonintoxicating beverage, Secs. 3-109 and 3-213.

SECTION 10-508 OBSCENE, THREATENING OR HARASSING TELEPHONE CALLS.

A. No person shall by means of a telephone, willfully:

1. Make any comment, request, suggestion or proposal which is obscene, lewd, lascivious, filthy or indecent;

2. Make a telephone call, whether or not conversation ensues, without disclosing his identity and with intent to annoy, abuse, threaten or harass any person at the called number;

3. Permit any telephone under his control to be used for any purpose prohibited by this section; or

4. In conspiracy or concerted action with other persons, make repeated calls or simultaneous calls solely to harass any person at the called number.

B. Use of a telephone facility under this section shall include all uses made of such a facility between the points of origin and reception. Any offense under this section is a continuing offense and shall be deemed to have been committed at either the place of origin or the place of reception.

State Law Reference: Telephone calls, 21 O.S. Sec. 1172.

SECTION 10-509 DISORDERLY HOUSE.

A. A disorderly house means any structure or vehicle by which the peace, comfort, health, welfare or decency of the public is disturbed by reason of the people therein committing

or resorting to any of the following acts:

1. The sale, distribution, possession or use of any controlled dangerous substance, the sale, distribution, possession or use of which is declared unlawful by state statute;

2. The violation of any of the ordinances of this city or statutes of this state regulating the sale, distribution, possession or use of alcoholic and nonintoxicating beverages as defined by law;

3. The performance of any sexual act declared unlawful by state statute or city ordinance including, but not limited to, soliciting for purposes of prostitution; or

4. The violation of any state statute or city ordinance prohibiting gambling.

B. No person shall keep or maintain, or aid, abet or assist in keeping and maintaining a disorderly house.

C. No owner, lessee, lessor, or other person, partnership or corporation having control over any house, building, structure, tent, vehicle, mobile home, or recreational vehicle shall knowingly use, lease, sublease or otherwise permit the use of same for the purpose of keeping therein any disorderly house, and knowing or ascertaining that such house, building, structure, tent, vehicle, mobile home, or recreational vehicle is so occupied as a disorderly house, no persons, partnership or corporation shall continue to grant permission to so use such premises as a disorderly house.

D. No person shall knowingly reside in, enter into, or remain in a disorderly house. In any prosecution for violation of this section, the city shall have the burden to prove such knowledge by direct evidence only and not by circumstantial evidence. This section shall not apply to physicians or officers in the discharge of their professional or official duties.

State Law Reference: Municipal power to regulate disorderly houses and indecencies, 11 O.S. Sec. 22-109.

Cross Reference: See also Sec. 10-513 on prostitution.

SECTION 10-510 NUDITY, IMPROPER DRESS, INDECENT EXPOSURE.

It is unlawful for any person to:

1. Appear in any public place in the city in a state of nudity;

2. Appear in any public place in the city in any offensive, indecent or lewd dress; or

3. Make an indecent public exposure of his or her person.

(Prior Code, Chapter 14, as amended)

State Law Reference: Similar provisions, 21 O.S. Sec. 1021.

SECTION 10-511 GAMBLING AND GAMBLING DEVICES.

A. Any person who plays or carries on, or opens or causes to be opened, or who conducts, either as owner or employee, roulette, craps, or any banking or percentage game, played with dice, cards or any other device, for money, checks, credit or any representative of value, or any other gambling game, is guilty of an offense.

B. Any person who bets on or plays at any of the prohibited games mentioned in subsection A above, or otherwise gambles, is guilty of an offense.

C. It is unlawful for any person to exhibit or expose to view in any building, or in any part of or room in any building, any table, cards, dice, roulette wheel or other article or apparatus designed for or used for gambling purposes.

D. It is unlawful for any person to keep, own, operate, use, conduct or cause to be kept, operated, used or conducted, either as owner, manager, dealer, clerk or employee, and whether for hire or not, any punch board, machine, cards, game, parlay card or any other device or paraphernalia, wherein or whereby any money or property or any representative of either, or other valuable thing, may be played, bet, staked, wagered or hazarded, won, lost or obtained upon any change, combination of numbers, emblems or any uncertain or contingent event or condition, or football or baseball contest.

E. It is unlawful for any person to play any prohibited game described in this section.

F. It is unlawful for any person to bar or barricade any building, or any part of or room in any building, in order to render the same difficult of access or ingress to the police officers of the city, in which building, or any part of or room in any such building, any table, cards, dice, roulette wheel or other article or apparatus designed for or being used for gambling purposes are exhibited or exposed to view.

G. The apparatus and paraphernalia used in the conduct of any of the gambling games prohibited by this section are hereby declared to be a public nuisance and subject to seizure and suppression by any officer, and shall be abated, forfeited and destroyed upon the order and decree of any court of competent jurisdiction.

H. It is unlawful for any person to be about in the immediate vicinity where a person or persons are gambling, whether by playing games, operating a slot machine or other device, or otherwise.

I. Nothing herein contained shall be construed to prevent the sponsoring and operation of bingo games by nonprofit religious, fraternal, charitable or educational organizations; provided the organizations are properly licensed and operated in accordance with law. (Prior Code, Chapter 14, as amended)

State Law References: Gambling generally, 21 O.S. Secs. 941 et seq.; punishment for betting on or playing prohibited game, 21 O.S. Sec. 942, bingo generally, 21 O.S. Secs. 995.1 et seq; Oklahoma Horseracing Act, 3A O.S. Secs. 200 et seq; disposition of equipment used for gambling, 21 O.S. Sec. 943; search and seizure of equipment used for gambling, 21 O.S. Sec. 916; 22 O.S. Secs. 1261 et seq.

SECTION 10-512 PROSTITUTION PROHIBITED.

A. As used in this section, "prostitution" means and includes the getting or receiving of the body for sexual intercourse for hire and includes the giving or receiving of the body for indiscriminate sexual intercourse without hire.

B. It is unlawful:

1. To engage in prostitution, lewdness or assignation;

2. To solicit, induce, entice or procure another to commit an act of lewdness, assignation or prostitution; or

3. To aid, abet or participate in the doing of any of the acts herein prohibited.

C. No person shall in any way or manner whatever, keep, harbor or house any prostitute.

D. No person shall entice or attempt to entice any female into a house of prostitution, or have illicit sexual intercourse with any female under eighteen (18) years of age.

E. No person shall keep or maintain a house of prostitution or house of assignation.

F. No person shall lease, let or furnish any building, room, tent or structure of any kind, or any conveyance used or to be used as a place of prostitution or assignation within the city, or knowingly permit the same to be so used.

G. No person shall knowingly accept, receive, levy or appropriate any money or other thing of value without consideration from a prostitute or from the proceeds of any women engaged in prostitution.

H. No person shall offer, or offer to secure another for the purpose of prostitution, or for any other lewd or indecent act.

I. No person shall direct, take or transport, or offer or agree to take or transport or aid or assist in transporting, any person to any house, place, building or other structure, vehicle, trailer or other conveyance, or to any other person with knowledge or having reasonable cause to believe that the purpose of such directing, taking or transporting is prostitution, lewdness or assignation.

J. It is unlawful for a person to be present in a public place in a manner and under circumstances manifesting the purpose of inducing, enticing, soliciting or procuring another to commit an act of prostitution. Among the circumstances which may be considered in determining whether such a purpose is manifested are: That such person is a known prostitute or procurer; that such person repeatedly beckons to, stops or attempts to stop or engage passersby in conversation, or repeatedly stops or attempts to stop motor vehicle operators by hailing, waving of arms or any other bodily gesture. No arrest shall be made for a violation of this subsection unless the arresting officer first affords such person an opportunity to explain such conduct, and no one shall be convicted of violating this subsection if it appears at trial that the explanation given was true and disclosed a lawful purpose.

K. For the purpose of this section, a "known prostitute or procurer" is a person who, within one year prior to the date of the suspected violation of this section has, within the knowledge of the arresting officer, been convicted of a violation of this section or has been convicted of violating any statute or ordinance of any jurisdiction which makes prostitution or soliciting for the purpose of prostitution unlawful. (Prior Code, Chapter 14, as amended)

State Law Reference: Definition of prostitution, 21 O.S. Sec. 1030; Soliciting, 21 O.S. 1029; pimping, 21 O.S. 1081.

SECTION 10-513 OFFENSES NEAR SCHOOLS.

No person shall engage in any of the conduct or acts hereinafter set forth around, in or near any school or school grounds or streets and alleys adjacent to any school:

1. Any conduct that would disturb the orderly conduct of the school;

2. Annoying or molesting any student or employee of the school;

3. Lewd or wanton conduct in, near or around any of the schools or school grounds or streets and alleys adjacent to the schools;

4. Moving or parking any vehicle in the vicinity of any school for the purpose of annoying or molesting any student or employee of the school; or

5. Any other act or conduct calculated to or likely to annoy or molest any student or employee of such school.

SECTION 10-514 SLEEPING IN PLACES, PROPERTY.

It is unlawful for any person, without lawful reason, between the hours of 12:00 midnight and sunrise, to sleep on any street, in any other public place, or on any property of another without the expressed or tacit consent of the owner or person in charge of such place.

SECTION 10-515 CONTRIBUTING TO DELINQUENCY OF A MINOR.

A. "Any person" as used in this section means any human being, without regard to the legal or natural relationship to a minor, as well as legal or corporate entities. "Minor" means any person under the age of eighteen (18) years.

B. Any person who shall knowingly or wilfully cause, aid, abet or encourage a minor to be, to remain, or to become a delinquent child, as defined by state law, shall be guilty of an offense. (Prior Code, Chapter 14, as amended)

State Law Reference: Contributing to delinquency of minors, 21 O.S. 856 et seq.

SECTION 10-516 TOBACCO TO MINORS PROHIBITED.

It is unlawful and an offense for any person to sell, barter, give or otherwise furnish cigarettes, cigars or tobacco in any form to a minor, or to permit such minor to frequent any premises owned, held or managed by him for the purpose of using or procuring cigarettes, cigars or tobacco in any form. (Prior Code, Chapter 14, as amended)

SECTION 10-517 CURFEW FOR MINORS--VIOLATIONS--EXCEPTIONS--DEFENSES.

A. The Council of the City of Piedmont hereby makes the following findings:

1. The City of Piedmont has a compelling governmental interest in restricting certain late-night activities of juveniles in order to protect the health, safety, and welfare of juveniles and other persons and their property; and,

2. The occurrences of juvenile crime have continued to substantially increase over the past several years; and,

3. The intent of this ordinance is to narrowly tailor the restriction of late-night activities of juveniles to the extent juvenile crime and violence is reduced and juveniles as well as other citizens and their property are protected from harm; and,

4. Juveniles are particularly vulnerable to the influence of persons who do not have the best interest of the juveniles in mind, due to the inability of some juveniles to make important or critical decisions in an informed and mature manner and to avoid choices that could be detrimental to their health, safety, or welfare; and,

5. The City and many public spirited citizens have expended a great deal of time and energy in trying to deter criminal conduct, assist parents, and protect juveniles; and,

6. A concern has arisen in the community that certain activities by juveniles and adults during the night hours endanger their health, safety, and welfare of other persons and their property; and,

7. The City does not desire to interfere with the parent-child or parent-juvenile relationship or the parental right to raise their children or juveniles; and,

8. While the City recognizes parents and/or responsible adults need for wide latitude in supervising their children, the City desires to protect juveniles from nocturnal dangers and encourage parental responsibility; and,

9. The City desires to assist the State of Oklahoma in the effective communication and documentation of juvenile offenses, the prevention of juvenile crime, the prevention of child and juvenile abduction, and the adoption of programs to assist in the welfare, development, and counseling of juveniles.

B. PURPOSE AND INTENT. The public purpose of this ordinance is to protect

juveniles from nocturnal dangers, enhance parental supervision and responsibility for juveniles, and protect the public at large.

C. DEFINITIONS. The following words, terms, and phrases when used in this article shall have the meanings ascribed to them in this section, except where the context clearly indicates a different meaning:

1. Curfew Hours means:

   a) 12:01 A. M. until 6:00 A. M. on any Monday, Tuesday, Wednesday, Thursday, or Friday; and,

   b) 1:00 A. M. until 6:00 A. M. on any Saturday or Sunday.

2. Emergency means: An unforeseen combination of circumstances or the resulting state that calls for immediate action. The term includes, but is not limited to, a fire, natural disaster, automobile accident, or any situation requiring immediate action to prevent serious bodily injury or loss of life.

3. Establishment means: Any privately-owned place of business operated for a profit to which the public is invited, including but not limited to any place of amusement or entertainment.

4. Guardian means:

   a) A person who, under court order, is the Guardian of the person of a juvenile; or,

   b) A public or private agency with whom a juvenile has been placed by a court.

5. Juvenile means: Any person under 18 years of age.

6. Parent means: A person who is a natural parent, adoptive parent, or step-parent of another person.

7. Public place means: Any place to which the public or a substantial group of the public has access, and includes but is not limited to streets, highways, and the common areas of schools, hospitals, apartment houses, office buildings, transport facilities, and retail establishments.

8. Remain means:

   a) To linger or stay; or

   b) Fail to leave premises when requested to do so by a police officer

or the owner, operator, or other person in control of the premises.

9. Operator means: Any individual, firm, association, partnership, or corporation operating, managing, or conducting any establishment. The term includes the members or partners of an association or partnership and the officers of a corporation.

10. Responsible Adult means: Any person having, assuming, or charged with permanent and/or temporary care and/or custody of a juvenile, including but not limited to:

    a) Any legal guardian or adult exercising legal guardianship over a juvenile;

    b) An adult who stands in loco parentis to a juvenile;

    c) Any person to whom legal custody of a juvenile has been given by order of a court;

    d) Any adult who has, assumes, or is charged with the care and/or custody of a juvenile at the request of or on behalf of a parent, guardian, loco parentis, or person to whom legal custody has been given by order of a court;

    e) Any adult who has, assumes, or is charged with the care and/or custody of a juvenile at the request of or on behalf of another parent.

11. Knowingly permit means: The parent, other responsible adult and/or operator as defined herein is aware of the fact the juvenile is in violation of the curfew hours, or that said person by exercise of reasonable care would have known that the juvenile is in violation of the curfew hours.

D. OFFENSES.

1. A juvenile commits an offense if he/she remains in any public place or on the premises of any establishment within the corporate City limits of the City of Piedmont during curfew hours.

2. A parent and/or other responsible adult of a juvenile commits an offense if:

    a) He/She knowingly permits or allows the juvenile to remain in any public place or on the premises of any establishment within the corporate City limits of the City during curfew hours; and,

    b) The parent and/or other responsible adult of a juvenile has twice

previously acted within any consecutive six (6) month period so as to knowingly permit or allow said juvenile to remain in any public place or on the premises of any establishment within the corporate City limits of the City of Piedmont during curfew hours. Every subsequent violation thereof will constitute a separate violation.

3. The owner, operator, or any employee of an establishment commits an offense if he knowingly permits or allows a juvenile to remain upon the premises of the establishment during curfew hours.

E. DEFENSES.

1. It is a defense to prosecution under Section 11-403D that the juvenile was at the time in question:

   a) Accompanied by the juvenile's parent or responsible adult;

   b) On an errand at the direction of the juvenile's parent or responsible adult, without any detour or stop;

   c) In a motor vehicle involved in interstate travel;

   d) Engaged in an employment activity, or going to or returning home from an employment activity, without any detour or stop;

   e) Involved in an emergency;

   f) On the sidewalk abutting the juvenile's residence or abutting the residence of a next-door neighbor if the neighbor did not complain to the police department about the juvenile's presence;

   g) Attending, going to or returning home, without any detour or stop, from an official school, religious, or other recreational activity supervised by adults, or an event sponsored by the City of Piedmont, a civic organization, or other similar entity that takes responsibility for the juvenile;

   h) Exercising First Amendment rights protected by the United States or the Oklahoma Constitution; or

   i) Married or had been married or had disabilities of minority removed in accordance with state law.

2. It is a defense to prosecution under Section 10-517D(3) that the owner, operator, or employee of an establishment promptly notified the police department that a juvenile was present on the premises of the establishment

during the curfew hours and refused to leave.

F. ENFORCEMENT. Before taking any enforcement action under this section a police officer shall ask the apparent offender's age and reason for being in the public place. The officer shall not issue a citation or make an arrest under this section unless the officer reasonably believes that an offense has occurred and that based on any response and other circumstances, no defense in Section 10-517.E is present. A violation of this ordinance shall not be the primary purpose for a vehicular stop by the police department.

G. PENALTIES.

1. A person who violates a provision of this Article is guilty of a separate offense for each day or part of a day during which the violation is committed, continued, or permitted. Each offense, upon conviction, is punishable by a fine not to exceed $200.00, plus costs. The Court may require community service work prescribed by the Court in lieu of a fine if the product of multiplying the number of minimum hours of community service work by the prevailing wage does not result in a number which exceeds the maximum fine authorized by law.

SECTION 10-518 FURNISHING TOBACCO PRODUCTS TO MINORS PROHIBITED.

1. Any person who shall furnish to any minor by gift, sale, or otherwise any cigarettes, cigarette papers, cigars, snuff, chewing tobacco, or other form of tobacco products shall be guilty of an offense.

2. Any persons who shall aid or assist any minor in purchasing tobacco products shall be guilty of an offense.

SECTION 10-519 PURCHASE AND POSSESSION OF TOBACCO PRODUCTS BY PERSONS UNDER 18 YEARS OF AGE.

1. It is unlawful for any person who is under eighteen (18) years of age to purchase, accept receipt of, or have in their possession a tobacco product, or to present or offer to any person any purported proof of age which is false, fraudulent, or not actually his or her own for purposes of purchasing tobacco products. Provided, it shall not be a violation of this section for a person to handle such tobacco products when required in the performance of such person's duties.

2. "Tobacco Products" means any product containing tobacco intended for human consumption.

SECTION 10-520 REFUSAL TO COMPEL CHILD TO ATTEND SCHOOL.

A. It shall be unlawful for a parent, guardian, or other person having custody of a child who is over the age of five (5) years, and under the age of eighteen (18) years, to neglect or refuse to cause or compel such child to attend and comply with the rules of some public, private, or other school, unless other means of education are provided for the full term the schools of the district are in session or the child is excused as provided in this section. One-half (1/2) day of kindergarten shall be required of all children five (5) years of age or older unless the child is excused from kindergarten attendance as provided in this section. A child who is five (5) years of age shall be excused from kindergarten attendance until the next school year after the child is six (6) years of age if a parent, guardian, or other person having custody of the child notifies the superintendent of the district where the child is a resident by certified mail prior to enrollment in kindergarten, or at any time during the first school year that the child is required to attend kindergarten pursuant to this section, of election to withhold the child from kindergarten until the next school year after the child is six (6) years of age.

SECTION 10-521 TRUANCY PROHIBITED.

B. It shall be unlawful for any child who is over the age of twelve (12) years and under the age of eighteen (18) years, and who has not finished four (4) years of high school work, to neglect or refuse to attend and comply with the rules of some public, private, or other school, or receive an education by other means for the full term the schools of the district are in session.

Provided, that this section shall not apply:

1. If any child is prevented from attending school by reason of mental or physical disability, to be determined by the board of education of the district upon a certificate of the school physician or public health physician, or, if no such physician is available, a duly licensed and practicing physician;

2. If any child is excused from attendance at school, due to an emergency, by the principal teacher of the school in which such child is enrolled, at the request of the parent, guardian, custodian, or other person having control of such child;

3. If any child who has attained his or her sixteenth birthday is excused from attending school by written, joint agreement between:

a. the school administrator of the school district where the child attends school, and

b. the parent, guardian, or custodian of the child. Provided, further, that no child shall be excused from attending school by such joint agreement between a school administrator and the parent, guardian, or custodian of the child unless and until it has been determined that such action is for the best interest of the child and/or the community, and that said child shall thereafter be under the supervision of the parent, guardian, or custodian until the child has reached the age of eighteen (18) years;

4. If any child is excused from attending school for the purpose of observing religious holy days if before the absence, the parent, guardian, or person having custody or control of the student submits a written request for the excused absence. The school district shall excuse a student pursuant to this subsection for the days on which the religious holy days are observed and for the days on which the student must travel to and from the site where the student will observe the holy days; or

5. If any child is excused from attending school for the purpose of participating in a military funeral honors ceremony upon approval of the school principal.

C. It shall be the duty of the attendance officer to enforce the provisions of this section. In the prosecution of a parent, guardian, or other person having custody of a child for violation of any provision of this section, it shall be an affirmative defense that the parent, guardian, or other person having custody of the child has made substantial and reasonable efforts to comply with the compulsory attendance requirements of this section but is unable to cause the child to attend school. If the court determines the affirmative defense is valid, it shall dismiss the complaint against the parent, guardian, or other person having custody of the child and shall notify the school attendance officer who shall refer the child to the district attorney for the county in which the child resides for the filing of a Child in Need of Supervision petition against the child pursuant to the Oklahoma Juvenile Code.

SECTION 10-522 PENALTY.

Any parent, guardian, custodian, child, or other person violating any of the provisions of this section, upon conviction, shall be guilty of a misdemeanor, and shall be punished as follows:

1. For the first offense, a fine of not less than Twenty-five Dollars ($25.00) nor more than Fifty Dollars ($50.00), or imprisonment for not more than five (5) days, or both such fine and imprisonment;

2. For the second offense, a fine of not less than Fifty Dollars ($50.00) nor more than One Hundred Dollars ($100.00), or imprisonment for not more than ten (10) days, or both such fine and imprisonment; and

3. For the third or subsequent offense, a fine of not less than One Hundred Dollars ($100.00) nor more than Two Hundred Fifty Dollars ($250.00), or imprisonment for not more than fifteen (15) days, or both such fine and imprisonment.

Each day the child remains out of school after the oral and documented or written warning has been given to the parent, guardian, custodian, child, or other person or the child has been ordered to school by the juvenile court shall constitute a separate offense.

CHAPTER 6

OFFENSES AGAINST PUBLIC AUTHORITY

Section 10-601	Escaping custody.
Section 10-602	Conveying instruments to assist escape.
Section 10-603	Assisting prisoner to escape.
Section 10-604	Assaulting city officer.
Section 10-605	Delivery of articles to person in confinement.
Section 10-606	Resisting a police officer.
Section 10-607	Citizens' duty to assist.
Section 10-608	Obedience to orders of police and firefighter.
Section 10-609	Eluding police officer by motor vehicle.
Section 10-610	Use of siren or whistle.
Section 10-611	Impersonating a police officer or any city officer.
Section 10-612	False statements, reports or complaints.
Section 10-613	False alarms.
Section 10-614	Removal of barricades.
Section 10-615	Resisting public officials.
Section 10-616	Duties of the public at fires, emergencies.
Section 10-617	Tampering with signs, equipment.
Section 10-618	Interference with police dog performing functions or duties.
Section 10-619	Destroying, tampering with evidence.

SECTION 10-601 ESCAPING CUSTODY.

No person lawfully in custody or confined in the city jail, before or after conviction for any violation of the ordinances of the city, or held in custody going to the city jail, or working upon the streets or other public grounds of the city or in custody of any officer of the city, shall break or attempt to break such city jail or custody, and escape or attempt to escape therefrom. (Prior Code, Chapter 14, as amended)

SECTION 10-602 CONVEYING INSTRUMENTS TO ASSIST ESCAPE.

No person shall convey into the city jail any disguised instrument or anything proper or useful to facilitate the escape of any prisoner lawfully committed to or detained in the city jail for any violation of the city ordinances, for any criminal offense, or lawfully detained or imprisoned therein, whether such escape is effected or attempted or not.

SECTION 10-603 ASSISTING PRISONER TO ESCAPE.

No person shall in any way aid, remove or assist any person to resist or escape from custody of any police officer or from any lawful confinement in the city. (Prior Code, Chapter 14, as amended)

State Law Reference: Assisting prisoner to escape, 21 O.S. Secs. 437, 441.

SECTION 10-604 DELIVERY OF ARTICLES TO PERSON IN CONFINEMENT.

No person shall deliver any article or thing to any person under arrest without the consent of the officer having charge and custody of the prisoner. (Prior Code, Chapter 14, as amended)

SECTION 10-605 ASSAULTING CITY OFFICER.

No person shall knowingly commit any assault, battery or assault and batter any city official or police officer or firefighter while in the performance of their duties. (Prior Code, Chapter 14, as amended)

State Law Reference: Assaulting law officer, 21 O.S. Secs. 649, 650.

SECTION 10-606 RESISTING A POLICE OFFICER.

A. It is unlawful to resist, oppose or assault, prevent, fail to cooperate with or in any way interfere with a police officer or any person duly authorized to act as such, while the officer or person is discharging or attempting to discharge his official duties within the limits of the city.

B. It is unlawful for any person to warn or signal another so as to assist such other person to flee, escape or evade an officer seeking to make an arrest or for any person to bar or lock any door or barrier in the face of or in front of an approaching officer.

C. Resisting an officer is the intentional opposition or resistance to, or obstruction of, an individual acting in his official capacity, and authorized by law to make a lawful arrest or seizure of property, or to serve any lawful process or court order, when the offender knows or has reason to know that the person arresting, seizing property, or serving process is acting in his official capacity.

D. The words "obstruction of" shall, in addition to their common meaning, include:

1. Flight by one sought to be arrested before the arresting officer can restrain him and after notice is given that he is under arrest;

2. Any violence toward or any resistance or opposition to the arresting officer after the arrested party is actually placed under arrest and before he is under arrest; or

3. Refusal by the arrested party to give his name and make his identity known to the arresting officer.

(Prior Code, Chapter 14, as amended)

SECTION 10-607 CITIZENS' DUTY TO ASSIST.

It is the duty of all persons in the city when called upon by any police officer to promptly aid and assist him in the execution of his duties. (Prior Code, Chapter 14, as amended)

SECTION 10-608 OBEDIENCE TO ORDERS OF POLICE AND FIREFIGHTER.

No person shall fail to heed a reasonable order of a police officer or firefighter while such officer is in the discharge of an official duty in maintaining the public safety or welfare.

SECTION 10-609 ELUDING POLICE OFFICER BY MOTOR VEHICLE.

No operator of a motor vehicle who has received a visual or audible signal, a red light or

a siren from a police officer driving a motor vehicle, showing the same to be an official police, sheriff or highway patrol car directing the operator to bring his vehicle to a stop, shall willfully increase his speed or extinguish his lights to elude or attempt to elude such police officer, or attempt in any other manner to elude the police officer.

SECTION 10-610 USE OF SIREN OR WHISTLE.

A. No person shall use any police whistle or any other instrument used by police officer to give signals to each other, or imitate any signal given by one police officer to another or any special signal used by police officers, for the purpose of improperly or causelessly attracting the attention of the police.

B. No person, except members of police department, fire department or ambulance services, shall ring, use or otherwise sound any gong, siren, whistle or any other device for making similar noise.

SECTION 10-611 IMPERSONATING A POLICE OFFICER OR ANY CITY OFFICER.

A. No person, other than police officers of the city, shall wear or carry the uniform, apparel, badge, identification card or any other insignia of office like or similar to, or a colorable imitation of that adopted and worn or carried by the police officers of the city.

B. No person shall do or attempt any act to impersonate a police officer.

C. It is unlawful to falsely impersonate any officer or employee of the city, or falsely represent himself to be an officer or employee of the city, by any kind of representation, pretense, insignia, sound, clothing or conduct, or exercise or attempt to exercise any of the duties, functions or powers of an officer or employee of the city without being authorized to do so. (Prior Code, Chapter 14, as amended)

State Law Reference: Impersonating public officers, 21 O.S. Secs. 263, 264, 1533.

SECTION 10-612 FALSE STATEMENTS, REPORTS OR COMPLAINTS.

A. No person shall knowingly make or file or cause to be made or filed a false or misleading report or misrepresentation, allegation or complaint with the police department or any officer or employee of the city, or on any official application or to commit perjury before any tribunal of the city.

B. No person shall wilfully and without probable cause make a false report to any person of any crime, violation of the city's ordinances, or circumstances indicating the possibility of crime or violation having been committed, including but not limited to the unlawful taking of personal property, which report causes or encourages the exercise of police or other official action or investigation.

SECTION 10-613 FALSE ALARMS.

It is unlawful for any person to turn in a false alarm of any nature or in any manner to deceive or attempt to deceive the fire department, police department or any other emergency personnel, or summon any officer or employee thereof with reference to any fire alarm or reported

fire, accident or other emergency or knowingly to cause the fire department or police department or its officers or employees to make a useless or unnecessary run to any part of the city or outside the city. (Prior Code, Chapter 14, as amended)

SECTION 10-614 REMOVAL OF BARRICADES.

It is unlawful for any person except by proper authority to remove any barricade or obstruction placed by authority of the city to keep traffic off any pavement, street, curb, sidewalk or other area. (Prior Code, Chapter 14, as amended)

SECTION 10-615 RESISTING PUBLIC OFFICIALS.

It is unlawful for any person knowingly or wilfully to:

1. Resist, oppose or obstruct the chief of police, any other police officer, the municipal judge, or any other officer or employee of the city in the discharge of his official duties;

2. Obstruct, threaten or otherwise intimidate or attempt to intimidate any officer or employee from the discharge of his official duties; or

3. Assault or beat, or revile, abuse, be disrespectful to, use abusive or indecent language toward or about, any such officer or employee while such officer or employee is in the discharge of his official duties.
(Prior Code, Chapter 14, as amended)

SECTION 10-616 DUTIES OF THE PUBLIC AT FIRES, EMERGENCIES.

A. All persons at fires or other emergencies or accidents shall conduct themselves in an orderly and lawful manner and to assist in maintaining law and order.

B. No person at or near any fire or emergency shall conduct himself in a disorderly manner or neglect or refuse to promptly obey any order of the fire chief or his assistants relative to such fire; and no person shall resist, obstruct, hinder or abuse any officer of the fire department or any firefighter in the proper discharge of his duty.

C. Every police officer present at a fire shall keep back all persons who are in the way or impeding the work of the fire department, and so far as possible protect all property from loss or injury, and cooperate with and assist the fire department in every way possible while at the fire. The fire chief or an assistant fire chief or any police officer shall have the power to designate persons to guard any goods.

D. No person shall follow or block the way of any emergency vehicle engaged in emergency run, or knowingly interfere with officers at the location of any fire or emergency. (Prior Code, Chapter 14, as amended)

State Law Reference: Interfering with firefighters 21 O.S. Sec. 127.

SECTION 10-617 TAMPERING WITH SIGNS, EQUIPMENT.

It is unlawful for any person to tamper with any signs, signal equipment or other device placed, operated and maintained by the city in connection with the administration of its code

provisions, ordinances, regulations, services, functions or performance of duties thereto. (Prior Code, Chapter 14, as amended)

Cross Reference: See also tampering with public utilities, Section 10-314.

SECTION 10-618 INTERFERING WITH POLICE DOG IN PERFORMING FUNCTIONS OR DUTIES.

It is unlawful and an offense for any person to interfere with, tease, meddle with, throw objects at or toward, torture, torment, injure, beat, strike, kick, mutilate, disable or kill any dog used by the police department of the city, or any member thereof, in the performance of the functions or duties of the department. (Prior Code, Chapter 14, as amended)

SECTION 10-619 DESTROYING, TAMPERING WITH EVIDENCE.

It is unlawful to destroy, alter, conceal or disguise physical evidence, plant false evidence or furnish false information to an officer which impedes that or another officer in the performance of his duties, or which is intended to prevent the apprehension or to obstruct the prosecution or defense of any person. (Prior Code, Chapter 14, as amended)

CHAPTER 7

WEAPONS AND FIREARMS

Section 10-701	Definitions.
Section 10-702	Carrying Weapons; exceptions.
Section 10-703	Sale of weapons to and possession of weapons by minors.
Section 10-704	Weapons prohibited in certain places.
Section 10-705	Duty to carry license and disclose possession of concealed weapon.
Section 10-706	Pointing weapon at another.
Section 10-707	Conditions under which firearms may be carried.
Section 10-708	Firearms in vehicles.
Section 10-709	Transporting loaded firearm in vehicles.
Section 10-710	Carrying concealed weapons conditions.
Section 10-711	Carrying weapons under influence of alcohol and drugs.
Section 10-712	Furnishing firearms to mentally incapacitated or insane persons.
Section 10-713	Reckless conduct.
Section 10-714	Selling or transferring firearms to certain persons prohibited.
Section 10-715	Discharging firearms, air rifles, BB guns, pellet guns, exceptions.

SECTION 10-701 DEFINITIONS.

As used in this chapter:

1. "Pistol" means any firearm capable of discharging a projectile composed of any material which may reasonably be expected to be able to cause lethal injury with a barrel or barrels less than sixteen (16) inches in length and using either gunpowder, gas, or any means of rocket propulsion, but not to include flare guns, underwater fishing guns, or blank pistols.

2. "Rifle" means any firearm capable of discharging a projectile composed of any material which may reasonably be expected to be able to cause lethal injury with a barrel or barrels more than sixteen (16) inches in length and using either gunpowder, gas, or any means of rocket propulsion, but not to include archery equipment, flare guns, or underwater fishing guns. In addition, any rifle capable of firing shot but primarily designed to fire single projectiles will be regarded as a rifle.

3. "Shotgun" means any firearm capable of discharging a series of projectiles of any material which may reasonably be expected to be able to cause lethal injury with a barrel or barrels more than eighteen (18) inches in length and using either gunpowder, gas, or any means of rocket propulsion, but not to include any weapon so designed with a barrel less than eighteen (18) inches in length. In addition, any shotgun capable of firing single projectiles but primarily designed to fire multiple projectiles such as shot will be regarded as a shotgun.

(Prior Code, Sec. 14-17)

SECTION 10-702 CARRYING WEAPONS—EXCEPTIONS.

It shall be unlawful for any person to carry upon or about his or her person, or in a purse or other container belonging to the person, any pistol, revolver, shotgun, or rifle whether loaded or unloaded , or any dagger, bowie knife, dirk knife, switchblade knife, spring-type knife, sword cane, billy, hand chain, metal knuckles, or any other type of offensive weapon, whether such weapon be concealed or unconcealed, except this section shall not prohibit the proper use of guns and knives for hunting, fishing, educational, or recreational purposes, and shall not prohibit the carrying or any use of weapons in a manner otherwise permitted by statute or as may be authorized by the Oklahoma Self-Defense Act, Section 1 through 25, when the person possesses a valid handgun license.

SECTION 10-703 SALE OF WEAPONS TO AND POSSESSION OF WEAPONS BY MINOR.

A. It shall be unlawful for any person within this state to sell or give to any child any of the arms or weapons designated in Section 10-702 of this ordinance; provided, the provisions of this section shall not prohibit a parent from giving his or her child a rifle or shotgun for participation in hunting animals or fowl, hunter safety classes, target shooting, skeet, trap, or other recognized sporting events, except as provided in subsection B of this section.

B. It shall be unlawful for any parent or guardian to intentionally, knowingly, or recklessly permit his or her child to possess any of the arms or weapons designated in Section 10-702 of this ordinance, including any rifle or shotgun, if such parent is aware of a substantial risk that the child will use the weapon to commit a criminal offense, or if the child has either been adjudicated a delinquent or has been convicted as an adult for any criminal offense.

C. It shall unlawful for any child to possess any of the arms or weapons designated in Section 10-702 of this title, except rifles or shotguns used for participation in hunting animals or fowl, hunter safety classes, target shooting, skeet, trap, or other recognized sporting event. Provided, the possession of rifles or shotguns authorized by this section shall not authorize the possession of such weapons by any person who is prohibited by state law from possessing certain weapons.

D. As used in this section, "child" means a person under eighteen (18) years of age.

SECTION 10-704 WEAPONS PROHIBITED IN CERTAIN PLACES.

A. It shall be unlawful for any person having a valid concealed handgun license issued pursuant to the provisions of the Oklahoma Self-Defense Act to carry any concealed handgun into any of the following places:

1. Any city hall, county courthouse, state offices or buildings, or federal offices or buildings.

2. Any meeting of any municipal, county, state, or federal officials, or any meeting of school board members, legislative members, or any meeting of other elected or appointed officials which is open to the public.

3. Any prison, jail, detention facility, or any facility used to hold or house arrested persons, prisoners, or persons alleged delinquent or adjudicated delinquent.

4. Any college or university facility. Provided, however, a person may carry a concealed handgun pursuant to a valid license as authorized by the Oklahoma Self-Defense Act with the permission of the president of the college or university.

5. Any other place specifically prohibited by law.

6. Any property where the owner, tenant, employer, or other person or entity owning or controlling such property has conspicuously placed signs at the entrances to said property stating that the possession of weapons on the property is prohibited.

B. The provisions of subsection A of this section shall not apply to any law enforcement officer or to any person authorized by law to carry a pistol in the course of their employment.

SECTION 10-705 DUTY TO CARRY LICENSE AND DISCLOSE POSSESSION OF CONCEALED WEAPON.

A. It shall be unlawful for any person carrying a concealed handgun in this City to fail to have possession of his or her valid handgun license issued by the state and a valid Oklahoma driver's license or an Oklahoma State photo identification.

B. It shall be unlawful for any person to fail or refuse to identify the fact that the person is in actual possession of a concealed handgun pursuant to the Oklahoma Self-Defense Act when the person first comes in contact with any law enforcement officer of the State or its political subdivisions, or a federal law enforcement officer during the course of any arrest, detainment, or routine traffic stop.

SECTION 10-706 POINTING WEAPON AT ANOTHER.

Except for an act of self-defense, it shall be unlawful for any person to point any pistol or any other deadly weapon, whether loaded or not, at any other person or persons, except as authorized expressly in the Oklahoma Self-Defense Act or the Oklahoma Firearms Act.

SECTION 10-707 CONDITIONS UNDER WHICH FIREARMS MAY BE CARRIED.

A. A person shall be permitted to carry loaded and unloaded shotguns, rifles, and pistols, open and not concealed, and without a handgun license as authorized by the Oklahoma Self-Defense Act, pursuant to the following conditions:

1. During competition in or practicing in a safety or hunter safety class, target shooting, skeet, trap, or other recognized sporting event.

2. During participation in or in preparation for a military function of the state military forces to be defined as the Oklahoma Army or Air National Guard, Federal Military Reserve, and active military forces.

3. During participation in, or in preparation for, a recognized police function of either a municipal, county, or state government as functioning police officials.

4. During a practice for or a performance for entertainment purposes.

5. For any legitimate purpose not in violation of the Oklahoma Firearms Act of 1971, Sections 1289.1 through 1289.17, or any legislative enactment regarding the use, ownership, and control of firearms.

B. A person shall be permitted to carry unloaded shotguns, rifles, and pistols, open and not concealed and without a handgun license as authorized by the Oklahoma Self-Defense Act pursuant to the following conditions:

1. When going to or from the person's private residence or vehicle, or a vehicle in which the person is riding as a passenger, to a place designated or authorized for firearms repairs or reconditioning, or for firearms trade, sale, or barter, or gunsmith, or hunting animals or fowl, or hunter safety course, or target shooting, or skeet or trap shooting, or any recognized firearms activity or event, and while in such places.

2. For any legitimate purpose not in violation of the Oklahoma Firearms Act of 1971, Sections 1289.1 through 1289.17.

C. The provisions of this section shall not be construed to prohibit educational or recreational activities, exhibitions, displays, or shows involving the use or display or

rifles, shotguns, pistols, or other weapons if the activity is approved by the property owner and sponsor of the activity.

SECTION 10-708 FIREARMS IN VEHICLES.

A person may transport in a motor vehicle in a rifle, shotgun, or pistol, open and unloaded, at any time. For purposes of this section "open" means the firearm is transported in plain view, in a case designed for carrying firearms, which case is wholly or partially visible, in a gun rack mounted in the vehicle, in an exterior locked compartment, or a trunk of a vehicle.

Any person who is the operator of a vehicle or is a passenger in any vehicle wherein any person who is licensed pursuant to the Oklahoma Self-Defense Act to carry a concealed handgun and is carrying a concealed handgun or has concealed the handgun in such vehicle, shall not be deemed in violation of the provisions of this section provided the licensee is in or near the vehicle.

SECTION 10-709 TRANSPORTING LOADED FIREARM IN VEHICLE.

Except as otherwise provided by the provisions of the Oklahoma Self-Defense Act, or another provision of law of this State, it shall be unlawful to transport a loaded pistol, rifle, or shotgun in a landborne motor vehicle over a public highway or roadway. However, a rifle or shotgun may be transported when clip or magazine loaded and not chamber loaded when transported in an exterior, locked compartment of the vehicle or trunk of the vehicle.

Any person who is the operator of a vehicle or is a passenger in any vehicle wherein another person is licensed pursuant to the Oklahoma Self-Defense Act, to carry a concealed handgun and is carrying a concealed handgun or has concealed the handgun in such vehicle, shall not be deemed in violation of the provisions of this section provided the licensee is in or near the vehicle.

SECTION 10-710 CARRYING CONCEALED WEAPONS CONDITIONS.

A. Any state, county, municipal, or federal peace officer retired due to length of service and who is receiving retirement benefits may carry a concealed pistol pursuant to the provisions of the Oklahoma Self-Defense Act. The person shall be required to comply with the Oklahoma Self-Defense Act.

B. It shall be unlawful for any person to carry a concealed handgun in this state except as authorized by the Oklahoma Self-Defense Act, or as may otherwise be authorized by other applicable state law.

SECTION 10-711 CARRYING WEAPONS UNDER INFLUENCE OF ALCOHOL AND DRUGS.

It shall be unlawful for any person to carry or use shotguns, rifles, or pistols in any circumstances while under the influence of beer, intoxicating liquors, or any hallucinogenic, or any unlawful or unprescribed drug, and it shall be unlawful for any person to carry or use shotguns, rifles, or pistols when under the influence of any drug prescribed by a licensed physician if the aftereffects of such consumption affect mental, emotional, or physical processes to a degree that would result in abnormal behavior.

SECTION 10-712 FURNISHING FIREARMS TO MENTALLY INCAPACITATED OR INSANE PERSONS.

It shall be unlawful for any person to knowingly transmit, transfer, sell, lend, or furnish any shotgun, rifle, or pistol to any person who is under an adjudication or mental incompetence, or to any person who is a moron, idiot, or is insane.

SECTION 10-713 RECKLESS CONDUCT.

It shall be unlawful for any person to engage in reckless conduct while having in his or her possession any shotgun, rifle, or pistol, such actions consisting of creating a situation of unreasonable risk and probability of death or great bodily harm to another, and demonstrating a conscious disregard for the safety of another person.

SECTION 10-714 SELLING OR TRANSFERRING FIREARMS TO CERTAIN PERSONS PROHIBITED.

It shall be unlawful for any person within this state to knowingly sell, trade, give, transmit, or otherwise cause the transfer of rifles, shotguns, or pistols to any convicted felon or any adjudicated delinquent, and it shall be unlawful for any person within this state to knowingly sell, trade, give, transmit, or otherwise cause the transfer of any shotgun, rifle, or pistol to any individual who is under the influence of alcohol or drugs, or is mentally or emotionally unbalanced or disturbed. All persons who engage in selling, trading, or otherwise transferring firearms will display this section prominently in full view at or near the point of normal firearms sale, trade, or transfer.

SECTION 10-715 DISCHARGING FIREARMS, AIR RIFLES, BB GUNS, PELLET GUNS—EXCEPTIONS.

It is unlawful for any person to discharge a firearm, air rifle, BB guns, or pellet gun within the corporate limits of the City of Piedmont, except under the following conditions:

1. When necessary in the line of duty by law enforcement official.

2. When lawfully discharged in defense of oneself, of another person, or of one's property.

3. When engaged in an organized competition event such as skeet shoots, trap shoots, turkey shoots, etc., provided such event does not create an unreasonable risk of harm to another.

4. While lawfully engaged in hunting and only under the following conditions:

   (a) The hunting shall be lawful under all applicable state and federal laws.

   (b) No discharge of rifles shall occur within 500 feet of any structure designed, used, or intended for human occupancy. No discharge of shotguns shall occur within 300 feet of any structure designed, used, or intended for human occupancy.

   (c) No person shall discharge firearms within 400 yards of any church, schoolhouse, or other public place where people may assemble so as to disturb such assemblage. No person shall shoot from or across a public road, highway, or railroad right-of-way.

   (d) A hunter on property not owned by the hunter shall carry on his person written permission to hunt signed by the owner or lessee of the land on which the hunt is occurring. This shall apply to all property, whether resided upon by persons or not.

(This page intentionally left blank)

PART 11

PARKS, RECREATION, CIVIC CENTER, AND LIBRARY

CHAPTER 1

PARKS AND RECREATION

Section 11-101	Rules and regulations adopted.
Section 11-102	Penalty.

CHAPTER 1A

PARKS AND RECREATION BOARD

Section 11-101A	Board created; membership; terms of office.
Section 11-102A	Organization.
Section 11-103A	Meeting.
Section 11-104A	Duties and powers.
Section 11-105A	Recreation Coordinator–position created.

CHAPTER 2

CIVIC CENTER

Section 11-201	Rules and regulations adopted.
Section 11-202	Penalty.

CHAPTER 3

LIBRARY

Section 11-301	Creation of Piedmont Library Board.
Section 11-302	Powers and Duties.
Section 11-303	Grounds and Building.
Section 11-304	Imposition of fines and penalties.
Section 11-305	Donation.
Section 11-306	Annual report of Board.
Section 11-307	Funds and accounting.

(This page intentionally left blank)

CHAPTER 1

PARKS AND RECREATION

Section 11-101 Rules and regulations adopted.
Section 11-102 Penalty.

SECTION 11-101 RULES AND REGULATIONS ADOPTED.

The city council shall from time to time adopt rules and regulations governing the city parks, lakes and recreation facilities.

SECTION 11-102 PENALTY.

It is unlawful for any person to use any recreational facilities owned or operated by the city without having complied with the rules and regulations promulgated by the city in connection therewith. Any violation of the rules and regulations, or failure to comply with such, shall be guilty of an offense.

CHAPTER 1A

PARK AND RECREATION BOARD

Section 11-101A	Board created; membership; terms of office.
Section 11-102A	Organization.
Section 11-103A	Meeting.
Section 11-104A	Duties and powers.
Section 11-105A	Recreation Coordinator-position created.

SECTION11-101A BOARD CREATED; MEMBERSHIP; TERMS OF OFFICE.

There is hereby created a Park and Recreation Board. The Board shall consist of five (5) members who shall be residents of the City, to be appointed by the City Council. The term of each member shall be three (3) years, or until the successor takes office. Vacancies for unexpired terms shall be filled in the same manner as provided for appointment. Provided, in the first instance the terms shall be staggered so that one member serves for one year, two members serve for two years, and two members serve for three years.

SECTION 11-102A ORGANIZATION.

The Park and Recreation Board, upon appointment, shall organize by electing one of its members as Vice-Chairman, and another as Secretary. Mayor of the City of Piedmont shall appoint the Chairman on an annual basis.

SECTION 11-103A MEETING.

The Park and Recreation Board shall meeting upon call of the Chairman or City Manager of the City of Piedmont.

SECTION 11-104A DUTIES AND POWERS.

The Park and Recreation Board shall act as an advisory board to the City Council with reference to all parks and recreational facilities of the City. The Board shall make recommendations to the City Council on the following matters:

1. Operation of park and recreational facilities.

2. Beautification of City parks.

3. Rules and regulations for City parks and recreational facilities.

4. Physical improvements of parks and recreational facilities.

5. Methods of financing and/or obtaining donations for improvement or acquisition of parks and recreational facilities.

6. Such other matters as the Board deems necessary to provide for operation and maintenance of City parks and recreational facilities.

SECTION 11-105A RECREATION COORDINATOR-POSITION CREATED.

. There is hereby created the position of Recreation Coordinator for the City of Piedmont. The Recreation Coordinator shall be a volunteer position without compensation, except reimbursement of out-of-pocket expenses incurred with express approval of the City Manager. The Recreation Coordinator shall be appointed for an indefinite term by the City manager, and shall perform such duties regarding parks and recreation facilities and programs as the City Manager may direct.

CHAPTER 2

CIVIC CENTER

Section 11-201 Rules and regulations adopted.
Section 11-202 Penalty.

SECTION 11-201 RULES AND REGULATIONS ADOPTED.

The city council shall from time to time adopt rules and regulations governing the city civic center.

SECTION 11-202 PENALTY.

It is unlawful for any person to use any recreational facilities owned or operated by the city without having complied with the rules and regulations promulgated by the city in connection therewith. Any violation of the rules and regulations, or failure to comply with such, shall be guilty of an offense.

CHAPTER 3

LIBRARY

Section 11-301	Creation of Piedmont Library Board.
Section 11-302	Powers and Duties.
Section 11-303	Grounds and Building.
Section 11-304	Imposition of fines and penalties.
Section 11-305	Donation.
Section 11-306	Annual report of Board.
Section 11-307	Funds and accounting.

SECTION 11-301 CREATION OF PIEDMONT LIBRARY BOARD.

There is hereby created the Piedmont Library Board consisting of five (5) members. The Piedmont Pubic Library and its management and operations are hereby placed under control of the Piedmont Library Board. The members of the Library Board shall be nominated by the Mayor and appointed by the City Council of the City of Piedmont to serve terms of three (3) years after the first day of May following their appointment. The terms shall be staggered at the initial appointment so that no more than two (2) members' terms expire in any given year. The members of the Library Board may be removed by the City Council for misconduct or neglect of duty, or any other reason authorized by the Piedmont City Charter. Vacancies shall be filled in the same manner as the original appointment. The Library Board immediately after the qualification of its members shall meet and organize by electing one member as President/Chairman, one member as Secretary, and by electing such other officers as it deems necessary.

SECTION 11-302 POWERS AND DUTIES.

The Piedmont Library Board shall have control and supervision of the public library of the City of Piedmont. The Library Board may appoint a suitable librarian and remove the librarian, subject to approval of the City Council of the City of Piedmont. The Library Board shall fix any fees to be charged by the library, and shall have such further powers and authority as may be provided by the ordinances of the City of Piedmont. The librarian, when appointed, shall be under the supervision and direction of the City Manager of the City of Piedmont as a municipal employee. The Library Board shall have the power to operate and maintain a library system, and to adopt rules and regulations for the operation of the library. The Library Board shall have the authority to apply, contract for, receive, and take advantage of funds available for public libraries from State, Federal, or private entities pertaining to the library. The Library Board shall have the authority to contract with third parties for the maintenance, operation, furnishing, and equipping the library.

SECTION 11-303 GROUNDS AND BUILDING.

The Library Board shall have the power, with the approval of the City Council of

the City of Piedmont to enter into a lease for suitable grounds and building for the library, and to suitably equip the facility for use as a library.

SECTION 11-304 IMPOSITION OF FINES AND PENALTIES.

The Library Board may impose fines or suitable penalties for loss of, failure to return, or damage to library materials, subject to ordinances enacted by the City of Piedmont.

SECTION 11-305 DONATIONS.

Any money, personal, or real property donated to and accepted by the City of Piedmont for the benefit of the Piedmont Library shall be held by the City of Piedmont as special trustee according to the terms of the donation.

SECTION 11-306 ANNUAL REPORT OF BOARD.

The Piedmont Library Board shall make on or before the 1st day of March each year an annual report to the City Council of the City of Piedmont stating:

1. The condition of its trust as of the 1st day of January of that year;

2. The various sums of money and property received from the library fund and other sources, and how such moneys have been expended and for what purpose;

3. The budget for the library for the next fiscal year.

4. Statistics on the general character and number of books and periodicals which:

   (1) are on hand;
   (2) are lost or missing;
   (3) have been added by purchase, gift, or otherwise during the year;
   (4) the number of persons making use of the library during the year; and,
   (5) such other information, statistics, and suggestions as it may deem of general interest.

SECTION 11-307 FUNDS AND ACCOUNTING.

All moneys and property held on behalf of the Piedmont Library shall be deposited on a daily basis with the Municipal Treasurer of the City of Piedmont. The Treasurer shall create a Piedmont Library Fund, and all moneys and other property of the library shall be held and accounted for under the Library Fund so created. All disbursements from the Library Fund shall follow the accounting procedures applicable to the City of Piedmont. All purchases shall comply with the purchasing ordinances of the City of Piedmont. The

fund shall be subject to appropriation, encumbrance, and purchase order requirements applicable to fiscal municipal funds. The budget for the Library Board shall be included in the comprehensive budget for the City of Piedmont.

(This page intentionally left blank)

PART 12

PLANNING, ZONING AND DEVELOPMENT

CHAPTER 1

BOARDS AND COMMISSIONS

ARTICLE A

PLANNING COMMISSION

Section 12-101	Planning commission created.
Section 12-102	Quorum.
Section 12-103	Organization and rules.
Section 12-104	Power to employ staff.
Section 12-105	Powers and duties.
Section 12-106	Purposes of plan.
Section 12-107	Subdivision of land.
Section 12-108	Zoning commission.
Section 12-109	Uniformity of regulations.
Section 12-110	Comprehensive plan, purpose of regulations and matters considered.

ARTICLE B

BOARD OF ADJUSTMENT

Section 12-120	Board of adjustment created.

CHAPTERS 2 AND 3

ZONING REGULATIONS

Section 12-201	Zoning regulations adopted.
Section 12-202	Penalty.

CHAPTER 4

SUBDIVISION REGULATIONS

Section 12-401	Subdivision regulations adopted.
Section 12-402	Penalty.

CHAPTER 5

OIL AND GAS REGULATIONS

Section 12-501	Intent and purpose.
Section 12-502	Definitions.
Section 12-503	Permits.
Section 12-504	Location of oil and gas wells; exceptions.
Section 12-505	Application and filing fee.
Section 12-506	Issuance or refusal of permit.
Section 12-507	Permittee's insurance and bond.
Section 12-508	Enhanced recovery and saltwater or deleterious substances disposal wells.
Section 12-509	Annual fee to operate.
Section 12-510	Disposal of saltwater.
Section 12-511	Compliance with applicable laws.
Section 12-512	Surface casing.
Section 12-513	Abandoned and plugging.
Section 12-514	Well location.
Section 12-515	Fences.
Section 12-516	Disposal of trash, rubbish, waste.
Section 12-517	Noise and other nuisances.
Section 12-518	Facilities.
Section 12-519	Storage tanks and separators.
Section 12-520	Pits.
Section 12-521	Retaining walls.
Section 12-522	Motive power.
Section 12-523	Drilling operations; equipment.
Section 12-524	Streets and alleys.
Section 12-525	Flaring/burning of gas.
Section 12-526	Fracture and acidizing.
Section 12-527	Swabbing and bailing.
Section 12-528	Rupture in surface casing.
Section 12-529	Transmission lines.
Section 12-530	Depositing oil products.
Section 12-531	Safety precautions.
Section 12-532	Oil and gas inspector.
Section 12-533	Accumulation of vapor.
Section 12-534	Inspection of pressure lines.
Section 12-535	Ingress and egress.
Section 12-536	Order to cease operations.
Section 12-537	Appeals.
Section 12-538	City council review of permit recommendations.
Section 12-539	Conduits on streets and alley.
Section 12-540	Annual fee for conduits.
Section 12-541	Applicability to existing conditions.
Section 12-542	Penalties.
Section 12-543	Injunctive relief.

CHAPTER 6

FLOOD DAMAGE PREVENTION

Section 12-601	Statutory Authorization, Findings of Fact, Purpose and Methods.
Section 12-602	Definitions.
Section 12-603	General Provisions.
Section 12-604	Administration.
Section 12-605	Provisions of Flood Hazard Reduction.

(This page intentionally left blank)

CHAPTER 1

BOARDS AND COMMISSIONS

ARTICLE A

PLANNING COMMISSION

Section 12-101	Planning commission created.
Section 12-102	Quorum.
Section 12-103	Organization and rules.
Section 12-104	Power to employ staff.
Section 12-105	Powers and duties.
Section 12-106	Purposes of plan.
Section 12-107	Subdivision of land.
Section 12-108	Zoning commission.
Section 12-109	Uniformity of regulations.
Section 12-110	Comprehensive plan, purpose of regulations and matters considered.

ARTICLE B

BOARD OF ADJUSTMENT

Section 12-121	Board of adjustment created.

ARTICLE A

PLANNING COMMISSION

SECTION 12-101 PLANNING COMMISSION CREATED.

There is hereby created a planning commission of the city. The commission shall be composed of five (5) members, nominated by the mayor and confirmed by the city council. The city manager and city engineer shall be ex-officio members of the commission. Each appointed member shall hold office for a period of three (3) years, or until his successor takes office. The appointed members of the commission shall be nominated and appointed solely with reference to their fitness and without reference to party affiliation and shall serve without compensation. Members may be removed by the city council only for inefficiency, neglect of duty or malefaction in office. Vacancies occurring otherwise than through the expiration of term shall be filled only for the unexpired terms by the mayor with confirmation by the city council. The city manager shall receive no compensation for his service on the commission. (Prior Code,Sec. 16-1)

State Law Reference: Planning commissions, 11 O.S. 45-101 et seq.

SECTION 12-102 QUORUM.

Three (3) members of the planning commission shall constitute a quorum for the transaction of business. Any action taken shall be official when concurred in by not less than a majority of

all appointed members of the planning commission entitled to vote. (Prior Code, Sec. 16-2)

SECTION 12-103 ORGANIZATION AND RULES.

Each year the commission shall elect a chairman, a vice chairman and a secretary, and may create and fill such other offices as it may deem necessary. The term of the chairman, vice chairman, and secretary shall be one year. The planning commission shall adopt rules for the transaction of business and regulations necessary to effectuate the purposes of this Part 12 of the city code. (Prior Code, Sec. 16-3)

SECTION 12-104 POWER TO EMPLOY STAFF.

The planning commission, subject to approval of the city council, shall have the power and authority to employ planners, engineers, attorneys, clerks and other help deemed necessary within the limits of the appropriation fixed by the city council. The salary and compensation of such employees shall be fixed by the city council and shall be paid out of the city treasury as are other officers and employees. Necessary expenses incurred by the commission shall be paid from the city treasury as other legal expenses of the city. (Prior Code, Sec.16-4)

SECTION 12-105 POWERS AND DUTIES.

The planning commission shall have the power to prepare and recommend to the city council for adoption a comprehensive plan for the physical development of the city. In conducting its work, the planning commission may consider and investigate any subject matter tending to the development and betterment of the city and may make recommendations as it may deem advisable concerning the adoption thereof to the city council. The planning commission may make or cause to be made surveys, studies, maps and plans in the conduct of its activities. Before final action is taken by the city council on the location or design of any public buildings, statue, memorial, park, boulevard, street, alley, playground, public grounds, bridge or change in any location of any street or alley, such question shall be submitted to the planning commission for investigation and report. In the preparation of the comprehensive plan, the planning commission may from time to time prepare and recommend to the city council for adoption a part or parts thereof, which parts shall cover one or more major geographical divisions of the city or one or more major elements of the comprehensive plan. The planning commission may from time to time recommend extending, amending or changing any portion of the comprehensive plan. (Prior Code, Sec.16-5)

SECTION 12-106 PURPOSES OF PLAN.

In the preparation of such plan, the planning commission may make careful and comprehensive surveys and studies of present conditions and future growth of the city with due regard to its relation to neighboring territory. The plan shall be made with the general purpose of guiding and accomplishing a coordinated, adjusted and harmonious development of the city and its environs which will, in accordance with present and future needs, best promote health, safety, morals, order, convenience, prosperity and general welfare, as well as efficiency and economy in the process of development; including, among other things, adequate provisions for traffic, the promotion of safety from fire and other dangers, adequate provision for light and air, the promotion of healthful and convenient distribution of population, the promotion of good civic design and arrangement, and wise and efficient expenditure of public funds. (Prior Code, Sec.16-6)

SECTION 12-107 SUBDIVISION OF LAND.

The planning commission may prepare and recommend to the city council for adoption rules and regulations governing the subdivision of land within the corporate limits for the city. All plans, plats or replats of land laid out in lots, plots, blocks, streets, alleys or other ways intended to be dedicated to public or private use within the corporate limits of the city may first be submitted by the city council to the planning commission for its recommendations. The disapproval of any such plan, plat or replat by the city council shall be deemed a refusal of the dedications shown thereon. No plat or replat of subdivision of land, or dedication of street or alley or other easement shall be entitled to record unless it bears the signature of the mayor, attested by the city clerk, certifying the approval and acceptance thereof by the city council. (Prior Code,Sec. 16-7)

SECTION 12-108 ZONING COMMISSION.

The planning commission shall also act as the zoning commission, which shall have the power to prepare and to recommend to the city council for adoption a zoning plan to regulate and restrict the height, number of stories and size of buildings and other structures, the percentage of lot that may be occupied, the size of yards, courts and other open spaces, the density of population, the location and use of buildings, structures and land for trade, industry, residence and other purposes. (Prior Code, Sec.16-8)

SECTION 12-109 UNIFORMITY OF REGULATIONS.

The planning commission may recommend the division of the city into districts of such number, size and area as may be deemed best suited to carry out the zoning plan. All such regulations shall be uniform for each class or kind of buildings throughout each district, but the regulations in one district may differ from those in other districts. (Prior Code,Sec. 16-9)

SECTION 12-110 COMPREHENSIVE PLAN, PURPOSE OF REGULATIONS AND MATTERS CONSIDERED.

Zoning regulations shall be made in accordance with a comprehensive plan and designed to lessen congestion in the streets; to secure safety from fire, panic and other dangers; to promote health and the general welfare; to provide adequate light and air; to prevent the over-crowding of land; to avoid undue concentration of population; to facilitate the adequate provisions of transportation, water, sewerage, schools, parks, and other public requirements. Such regulations shall be made with reasonable consideration, among other things, as to the character of the district and its peculiar suitability for particular uses, and with a view to conserving the value of buildings and encouraging the most appropriate use of land throughout the municipality. (Prior Code, Sec. 16-10)

Ed. Note: The city's Comprehensive Land Use Plan, as adopted by Ord. No. 320, 12/27/93, and all amendments thereto, are on file in the office of the city clerk.

ARTICLE B

BOARD OF ADJUSTMENT

SECTION 12-121 BOARD OF ADJUSTMENT CREATED.

There is hereby created within and for the city a board of adjustment with the powers and duties and membership as provided by state law and the city's zoning ordinance.

State Law Reference: Boards of adjustment, 11 O.S. Secs. 44-101 et seq.

Cross Reference: See the City's zoning ordinance for details on the board of adjustment.

CHAPTERS 2 AND 3

ZONING REGULATIONS

Section 12-201 Zoning regulations adopted.
Section 12-202 Penalty.

SECTION 12-201 ZONING REGULATIONS ADOPTED.

The City's "Zoning Ordinance", as adopted by the City, and all amendments thereto, are hereby adopted and incorporated herein by reference, applicable in the city as fully as if set out at length herein. A copy of the "Zoning Ordinance" and amendments thereto are on file in the office of the city clerk. (Ord. No. 257, 7/30/87)

Cross Reference: See Ordinance Table of this code for listing of the amendments to the city's zoning ordinance.

SECTION 12-202 PENALTY.

Any violation of the city's zoning ordinance, amendments or regulations, is punishable as provided in Section 1-108 of this code. Each day that such violation exists is a separate offense.

CHAPTER 4

SUBDIVISION REGULATIONS

Section 12-401 Subdivision regulations adopted.
Section 12-402 Penalty.

SECTION 12-401 SUBDIVISION REGULATIONS ADOPTED.

The City's "Subdivision Regulations", and all amendments thereto, are hereby adopted and incorporated herein by reference, applicable in the city as fully as if set out at length herein. A copy of the city's "Subdivision Regulations" and amendments are on file in the office of the city clerk. (Ord. No. 258, 7/30/87; Ord. No.316, 9/27/93)

Cross Reference: See the Ordinance Table in this code for a listing of amendments to the city's subdivision regulations.

Ed. Note: The city's Comprehensive Land Use Plan, as adopted by Ord. No. 320, 12/27/93, and all amendments thereto, are on file in the office of the city clerk.

SECTION 12-402 PENALTY.

Any violation of the city's subdivision regulations is punishable as provided in Section 1-108 of this code. Each day that a violation continues shall be a separate offense.

CHAPTER 5

OIL AND GAS REGULATIONS

Section 12-501	Intent and purpose.
Section 12-502	Definitions.
Section 12-503	Permits.
Section 12-504	Location of oil and gas wells; exceptions.
Section 12-505	Application and filing fee.
Section 12-506	Issuance or refusal of permit.
Section 12-507	Permittee's insurance and bond.
Section 12-508	Enhanced recovery and saltwater or deleterious substances disposal wells.
Section 12-509	Annual fee to operate.
Section 12-510	Disposal of saltwater.
Section 12-511	Compliance with applicable laws.
Section 12-512	Surface casing.
Section 12-513	Abandoned and plugging.
Section 12-514	Well location.
Section 12-515	Fences.
Section 12-516	Disposal of trash, rubbish, waste.
Section 12-517	Noise and other nuisances.
Section 12-518	Facilities.
Section 12-519	Storage tanks and separators.
Section 12-520	Pits.
Section 12-521	Retaining walls.
Section 12-522	Motive power.
Section 12-523	Drilling operations; equipment.
Section 12-524	Streets and alleys.
Section 12-525	Flaring/burning of gas.
Section 12-526	Fracture and acidizing.
Section 12-527	Swabbing and bailing.
Section 12-528	Rupture in surface casing.
Section 12-529	Transmission lines.
Section 12-530	Depositing oil products.
Section 12-531	Safety precautions.
Section 12-532	Oil and gas inspector.
Section 12-533	Accumulation of vapor.
Section 12-534	Inspection of pressure lines.
Section 12-535	Ingress and egress.
Section 12-536	Order to cease operations.
Section 12-537	Appeals.
Section 12-538	City council review of permit recommendations.
Section 12-539	Conduits on streets and alley.
Section 12-540	Annual fee for conduits.
Section 12-541	Applicability to existing conditions.
Section 12-542	Penalties.
Section 12-543	Injunctive relief.

SECTION 12-501 INTENT AND PURPOSE.

Whereas the imprudent operation of an oil and gas facility can constitute a menace to the

public health, safety, and welfare of the city, it is the intent and purpose of this chapter that oil and gas operations be reasonably regulated for the public good. (Ord. No. 195, 9/24/84)

SECTION 12-502 DEFINITIONS.

For the purpose of this chapter, the following definitions shall apply:

1. "Abandoned well" means:

a. Each well in which no production casing has been run, and for which drilling or testing operations have ceased for thirty (30) consecutive days; or

b. Any other well for which there is no current city permit;

2. All technical or oil and gas industry words or phrases used herein and not specifically defined herein shall have that meaning customarily attributable thereto by prudent operators in the oil and gas industry;

3. "Artificial production" means the raising to the surface of the earth, by means other than natural flow, petroleum or natural gas;

4. "Completion" means that time when the completion rig is removed from the drilling site;

5. "Corporation commission" means the Oklahoma Corporation Commission;

6. "Deleterious substance" means any chemical, salt, water, oil field brine, waste oil, waste emulsified oil, basic sediment, mud, or injurious substances produced or used in the drilling, development, producing, transportation, refining, and processing of oil, gas, or condensate;

7. "Enhanced recovery" means an operation by which fluid or energy is introduced into a source of supply for the purpose of facilitating recovery therefrom;

8. "Natural production" means the raising to the surface of the earth, by natural flow, petroleum, or natural gas;

9. "Oil and gas inspector" means that person, firm, or corporation qualified and employed by the city to enforce the provisions of this chapter, or by his/her authorized representatives;

10. "Permittee" means the person to whom is issued a permit or permits under the terms of this chapter;

11. "Person" means and includes any person, firm, partnership, association, corporation, trust, cooperative, or other type of organization;

12. "Pollution" means the contamination or other alteration of the physical, chemical, or biological properties of any natural waters, soil, or air in the city, or such discharge of any liquid, gaseous, or solid substance into any water, air, or soil in the city as will or is likely to create a nuisance or render such water, soil, or air harmful or detrimental or injurious to public health, safety, or welfare, to domestic, commercial, industrial, agricultural, recreational, or other beneficial

uses, or to livestock, animals, or aquatic life;

13. "Pressure maintenance" means an operation by which gas, water, or other fluids are injected into a supply of oil to maintain pressure or retard pressure decline therein for the purpose of facilitating recovery therefrom, and which has been approved by the corporation commission after notice and hearing;

14. "Salt water" means any water containing more than five hundred (500) mg/l chlorides;

15. "State" means the State of Oklahoma, its branches, departments, agencies, boards, or the officers thereof;

16. "Treatable water" means surface and subsurface water in its natural state which may or may not require treatment to be useful for human consumption, and contains less than ten thousand (10,000) ppm total dissolved solids or five thousand (5,000) ppm chlorides;

17. "Water", "waters of the city", or "city water" means all streams, lakes, ponds, marshes, watercourses, waterways, wells, springs, irrigation systems, drainage systems, and all other bodies or accumulations of water, surface and underground, natural or artificial, public or private, which are contained within, flow through or border upon the city or any portion thereof; and

18. "Well" means, unless specifically qualified, any hole or holes, bore or boxes, to any depth for the purpose of producing and recovering any oil, gas, liquified petroleum matter, deleterious substances, or for the injection or disposal of any of the foregoing.

(Ord. No. 195, 9/24/84)

SECTION 12-503 PERMITS.

A. It shall be unlawful and an offense for any person acting for himself or acting as agent, servant, employee, subcontractor, or independent contractor of any other person to drill or operate any oil or gas well or disposal well within the city or to work upon or assist in any way in the production or operation of any such well, without a permit having first been issued by the oil and gas inspector in accordance with this chapter.

B. Any permit issued under this chapter shall expire one year from the date of issuance unless the well drilling has commenced and the permittee is proceeding diligently to complete the drilling operation. (Ord. No. 195, 9/24/84)

SECTION 12-504 LOCATION OF OIL AND GAS WELLS; EXCEPTIONS.

A. No oil or gas well or disposal well shall be drilled as follows:

1. On property zoned for residential use;

2. In platted residential subdivisions;

3. On tracts of land less than five (5) acres in size;

4. Within three hundred fifty (350) feet from a dwelling or in case of a residential lot with no dwelling located thereon, within three hundred fifty (350) feet from the building setback

lines of the residential lot. (Distance shall be measured from the well head); or

5. Within three hundred fifty (350) feet of a church, school, or other use where large numbers of people assemble; including, but not limited to hospitals, nursing homes, restaurants, entertainment facilities. Distance shall be measured from the well head.

B. Where owing to special conditions above restrictions will result in an unnecessary hardship, the applicant may request a location exception from the planning commission and city council. Upon receiving such an application the city clerk shall publish notice and mail notice of a joint public hearing before the city council and planning commission at least ten (10) days prior to the hearing to all persons within three hundred (300) feet of the exterior boundaries of the tract wherein the well is proposed to be located. At the public hearing the city council may grant a location exception only upon finding that:

1. The application of the provisions of this section to the particular piece of property would create an unnecessary hardship; or

2. Granting the special location exception will not cause substantial detriment to the public good or impair the purposes and intent of the chapter, and will not create an unnecessary risk of harm to surrounding properties.

At the public hearing the planning commission may make such recommendations to the city council as it deems appropriate. The city council, after the public hearing, shall either grant or deny the location exception. The decision of the city council shall be final. In granting a location exception the city council may impose such reasonable conditions as it deems necessary for the protection of the public health, safety, and welfare. In reviewing the application for a location exception the planning commission and city council shall consider all the following circumstances in determining whether to grant or deny same:

a. Dangers of fire and explosion;

b. Adequacy of existing streets and roads to serve drilling site;

c. Impact of truck traffic surrounding neighborhood;

d. Impact of drilling activity on quality of life and environment in area of proposed well;

e. Feasibility of proposed site as contrasted with other available drilling sites;

f. Density of population in area surrounding proposed well site;

g. Accessibility of proposed drilling site to fire, police, and other emergency services;

h. Proximity of proposed drilling site to schools, churches, dwellings, and other buildings; and

i. Adequacy of public services, i.e. fire, police, water, etc., to serve or protect surrounding properties from dangers associated with drilling activity.

C. For wells approved in those areas requiring a location exception under this section,

no boiler, gas powered heater/treater or electric lighting generator shall be located closer than one hundred (100) feet to any producing oil or gas well or oil tank. This subsection shall not apply to existing wells which are operating under valid permits issued prior to September 28, 1987 by the city. (Ord. No. 195, 9/24/84; Ord. No. 255, 9/28/87)

SECTION 12-505 APPLICATION AND FILING FEE.

A. Every application for a permit to drill an original well or to re-enter an abandoned well shall be in writing, signed by the applicant or by some person duly authorized to sign same on his behalf, and it shall be filed with the oil and gas inspector and be accompanied by a filing fee. No application shall request a permit to drill more than one well. The application shall contain full information required by the oil and gas inspector, including the following:

1. Name and address of applicant and date of application;

2. Where applying for a proposed original well:

   a. A block map of the area within a three hundred fifty (350) foot radius of wellhead, including thereon the location of the proposed well, and distance therefrom to all existing dwelling houses, buildings, or other structures, designed for the occupancy of human beings or animals within three hundred fifty (350) feet of any such well, and the location of all existing oil, gas, or fresh water wells within the ten (10) acre tract; and

   b. The names of the surface owners;

3. A drilling prognosis to specify in detail the amount, weight, and size of conductor pipe and surface pipe, and the procedures to be used for cementing such. Plugging procedures to be used in the event production if not established shall also be specified;

4. A statement of the provisions for water for the drilling and completion rig;

5. A written plan for disposal of deleterious substances produced during the drilling operations and any deleterious substances produced as a result of production from the well. This plan shall include the method of transportation and name of transporter or transport contractor for he deleterious substances and the name and location of the permitted disposal site, including a copy of the permit for the disposal site and a contract with the owner of the permitted site for the disposal of the deleterious substances, or in the alternative, provide proof of ownership of the permitted disposal site. The permittee shall provide monthly reports to the city of the amount of saltwater and other deleterious substances produced along with receipts for disposal of same;

6. A complete site development plan drawn to scale (showing all facilities of the drilling operation, including proposed production equipment, pipelines, and fence). Access to the drilling site shall be clearly identified. All existing improvements (houses, wells, barns, etc.) within three hundred fifty (350) foot radius of the wellhead shall be shown including any watercourse ponds, etc.;

7. The name and address of the person within the state upon whom service of process upon applicant may be made; and in the case of any nonresident person who has no such service agent within this state there shall be attached to the application the designation of such a service agent resident in Oklahoma or Canadian County, Oklahoma, and a consent that service of summons

may be made upon such person in any action to enforce any of the obligations of the applicant hereunder;

8. A list of all current property owners as shown on current year tax rolls within three hundred (300) feet of the exterior boundaries of the subject property (when location exception is requested), certified by a bonded abstractor or an attorney licensed to practice in the state;

9. A verification of the above information by the applicant hereunder.

B. A copy of the approved drilling permit from the corporation commission and a copy of the staking plat shall be filed with the city prior to issuance of the municipal permit.

C. Where the application is one for he re-entry of an abandoned well, the application shall contain all the information required by Subsection A of Section 12-505 above, with the exception that the oil and gas inspector may vary the requirements thereof to suit the application before him. Provided, that such an application for a permit to re-enter an abandoned well shall provide the following information in every case:

1. A statement of:

   a. The then condition of the well;

   b. The depth to which it is proposed such well shall be deepened;

   c. The proposed casing program to be used in connection with the proposed deepening;

2. Evidence of adequate current tests showing that the casing strings currently passed the same tests that are required in the case of the drilling of an original well.

(Ord. No. 195, 9/24/84)

SECTION 12-506 ISSUANCE OR REFUSAL OF PERMIT.

A. The oil and gas inspector's office, after the filing of an application for a permit under this chapter shall determine whether or not the application complies in all respects with the provision of this chapter and applicable federal and state law; and, if it does, shall recommend to the mayor and city council that the permit be issued; however, if the proposed well is located more than three hundred fifty (350) feet from the uses described in paragraphs 4 and 5 of Subsection A of Section 12-504, then the oil and gas inspector may issue the permit without prior approval of the mayor and city council. Each permit issued under the terms of this chapter shall:

1. By reference have incorporated therein all the provisions of this chapter with the same force and effect as if this chapter were copied verbatim therein;

2. By reference have incorporated therein all the provisions of applicable state law and the rules, regulations, and standards adopted in accordance therewith relating to the protection of human beings, animals, and natural resources;

3. Specify that the term of the permit shall be for a period of one year from the date of issuance thereof, and for like periods thereafter upon the successful inspection for the

permittee's well and operations, as is provided for elsewhere herein;

4. Specify such conditions imposed by the oil and gas inspector as are by this chapter authorized; and

5. Specify that no actual operations shall be commenced until the permittee shall file and have approved the required bonds and certificate of insurance in the appropriate amounts as provided for elsewhere herein.

B. If the permit be issued it shall, in two (2) originals, be signed by the oil and gas inspector and the permittee, and when so signed shall constitute the permittee's license to drill and operate in the city and the contractual obligation of the permittee to comply with the terms of such permit, such bonds as are required, and applicable state law, rules, regulations, standards, and directives. One executed original copy of the permit shall be retained by the oil and gas inspector; the other shall be retained by the permittee and shall be kept available for inspection by any city or state law enforcement official who shall demand to see same.

C. If the permit be refused or if the applicant notifies the oil and gas inspector in writing that he does not elect to accept the permit as tendered and wishes to withdraw his application, of if the bonds of the applicant be not approved, then upon the happening of any of the events the cash fee filed with the application shall be refunded to the applicant, except that there shall be retained therefrom by the city the sum as set by the council as a processing fee. (Ord. No. 195, 9/24/84)

SECTION 12-507 PERMITTEE'S INSURANCE AND BOND.

A. In the event a permit shall be issued by the oil and gas inspector, no actual operations shall be commenced until the permittee shall file with the city bonds and a certificate of insurance as follows:

1. A bond in the principal sum as set by the council. The bond shall be executed by a reliable insurance company authorized to do business in the state, as surety, and with the applicant as principal, running to the city for the benefit of the city and all persons concerned, conditioned that the permittee will comply with the terms and conditions of this chapter in the operation of the well for either natural or artificial production, injection, or disposal. The bond shall become effective on or before the date the same is filed with the city and remain in force and effect for at least twelve (12) months subsequent to the expiration of the permit term, and in addition the bond will be conditioned that the permittee will promptly pay fines, penalties, and the assessments imposed upon the permittee by reason of his breach of any of the terms, provisions, and conditions of this chapter, and that the permittee will promptly restore the streets, sidewalks, and other public property of the city which may be disturbed or damaged in permittee's operations to their former condition; and that the permittee will promptly clear all premises of all litter, trash, waste, and other substances, and will, after abandonment, grade, level, ad restore the property to the same surface condition, as practicable as is possible, as existed prior to commencing operations; and when required, plug an abandoned well.

2. If, after the completion of a producing well permittee has complied with al of the provisions of this chapter, such as removing derrick and clearing the premises, he may apply to the oil and gas inspector to have the bond reduced to a sum as set by the council for the remainder of the time the well produces without reworking. During reworking operations the amount of the bond shall be increased to the original amount.

B. In addition to the bonds required in paragraph A of this section the permittee shall carry a policy or policies of standard comprehensive public liability insurance, including pollution coverage and completed operations coverage, and including contractual liability covering bodily injuries and property damage, naming the permittee and the city, issued by an insurer authorized to do business within the state, the policy or policies in the aggregate shall provide for the following minimum coverage:

Bodily injuries and property damage:

$100,000.00 per person;

$1,000,000.00 per accident.

Permittee shall file with the city certificates of the insurance as above stated, and shall obtain the written approval thereof of the oil and gas inspector who shall act thereon promptly after the date of such filing. The insurance policy or policies shall not be cancelled without written notice to the oil and gas inspector at least twenty (20) days prior to the effective date of such cancellation. In the event the policy or policies are cancelled, the permit granted shall immediately thereupon terminate without any action on the part of the oil and gas inspector, and permittee's rights to operate under the permit shall cease until permittee files additional insurance as provided herein. (Ord. No. 195, 9/24/84)

SECTION 12-508 ENHANCED RECOVERY AND SALTWATER OR DELETERIOUS SUBSTANCES DISPOSAL WELLS.

A. No person shall re-enter or drill a well to be used for enhanced recovery or disposal of saltwater or other deleterious substances without first obtaining the necessary permit therefor. Such permit shall consist of two (2) separate parts:

1. Permit to drill or re-enter and construct; and

2. Permit to operate.

B. An application for the permit to drill or re-enter a well for enhanced recovery or substance disposal shall be in the same form as that required for a permit to drill an original well, and shall contain complete information required by the oil and gas inspector, including the following:

1. A block map of the well site showing all equipment to be used thereat, location of pipelines, access road, and distances from the well to any and all fences, public roadways, and buildings within a radius of three hundred fifty (350) feet;

2. A block map of the project, showing the location of:

a. All water supply wells within a one-fourth (1/4) mile radius of each injection or disposal well;

b. All public water supply wells, disposal wells, injection wells, producing wells, and plugged and abandoned wells within the project area and those sections immediately adjacent;

c. All conduits; and

d. Tank battery, pumping station, and appurtenance equipment;

3. All wells within the project area and those sections immediately adjacent shall be indicated by status (e.g. plugged and abandoned, injection, salt water, oil, etc.) and show the following additional information:

a. Footage location (surface casing);

b. Derrick floor and ground level elevation;

c. Drilled total depth;

d. Packer body total depth;

e. Size, depth, and quality of surface and production casing, including zones from which casing has been removed;

f. Location of all plugs, packers, cement plugs, tubing anchors, etc., with the well bore;

g. Depth and nature of all cement squeeze jobs;

h. Formation name and depth of all open perforations in a producing open hole;

i. Volume and type of cement used on surface and production strings; and

j. Top of cement;

4. One copy of all electric, mechanical, sample, and driller's logs, if available;

5. Fee and operation name of each well;

6. One copy of all cement bond logs;

7. Such other information as may be required by the inspector; and

8. Copies of all information supplied to the corporation commission, and the commission's approval of the project.

C. Upon the completion of the application required hereunder, the oil and gas inspector shall review same and make a recommendation of approval or disapproval to the mayor and city council.

D. Prior to placing any enhanced recovery or substance disposal well into service a permit to operate such well shall be obtained from the oil and gas inspector. Every application for a permit to operate such well shall be obtained from the oil and gas inspector. Every application for a permit to operate such well shall contain the following information:

1. Depth to static water level (hydrostatic head). Such data shall be obtained by means of a method approved by the oil and gas inspector. Such data shall be obtained not less than forty-eight (48) hours after openings have been made through the casing into the injection disposal zone or zones; and

2. Based on the static water level identified in the previous paragraph, maximum operating pressures and rates of injection shall be established and maintained so as to prevent the hydraulic pressure level at a radius of ten (10) feet from the injection or disposal wells from rising above the base elevation of treatable water. Such maximum operating pressures and injection rates shall be noted on the permit. No injection or disposal well will be permitted to operate if the well's zone of influence will exceed the above-referenced limits.

E. A fee shall be submitted along with every application for a permit to operate an injection or substance disposal well.

F. Copies of Corporation Commission Form Number 1015, indicating successful pressure testing of each injection well at a pressure greater than the maximum proposed for the project, or if no such form number 1015 has been filed and approved, then sufficient evidence of the successful pressure testing of each injection well shall be filed with the oil and gas inspector.

G. Every such injection or disposal well shall be constructed so as to seal the injection zone from the upper portion of the casing. the annulus between the injection tubing and the casing shall be filled with a noncorrosive fluid then sealed and a one-fourth (1/4) inch female fitting with cut-off valve shall be attached so that the pressure in the annulus may be measured by the oil and gas inspector by attaching a gauge having a one-fourth (1/4) inch male fitting. A pressure shall be maintained in the annulus sufficient to monitor the fluids in the annulus. Any significant deviation from the established pressure shall be cause to shut down the well, and may result in cancellation of the operating permit until such time as the established pressure can once again be maintained.

H. Injection lines shall be buried and maintained in a trench of a depth no less than four (4) feet, and shall be pressure tested (static) annually at a minimum of one hundred fifty percent (150%) of the pressure normally encountered at the injection pump discharge for a reasonable period of time to be fixed by the oil and gas inspector. The oil and gas inspector shall be notified five (5) days in advance of such test and may supervise same. Test results shall be filed with the city upon completion.

I. Domestic and public water supply wells located within a radius of one-quarter (1/4) mile of any enhanced recovery or disposal well shall be tested prior to beginning injection or disposal and thereafter semi-annually for the presence of deleterious substances such as chlorides, sulphates, and dissolved solids. Such testing is the responsibility of the permittee, and at permittee's expense, to be conducted by a person approved by the oil and gas inspector. The oil and gas inspector shall be notified five (5) days in advance of such testing and may be present therefor. Test results shall be filed with the city upon completion. (Ord. No. 195, 9/24/84)

SECTION 12-509 ANNUAL FEE TO OPERATE.

An annual inspection fee is hereby levied upon each well operated or maintained under a permit issued by the city; such fee shall be in the amount as set by the council, payable to the city on or before the annual anniversary date of the issuance of any permit under this chapter and

thereafter on January 1st of each year. No permit for any well shall be considered valid for any year for which the annual fee has not been paid. Failure to pay any required permit fee within thirty (30) days of a delinquent notice sent to the latest address provided by the permittee will result in cancellation of the permit. (Ord. No. 195, 9/24/84)

SECTION 12-510 DISPOSAL OF SALTWATER.

A. Every permittee under this chapter shall be responsible for the safe disposal of saltwater or other deleterious substances which he may bring to the surface of the earth and shall provide a plan for such disposal as required by paragraph 5 of Subsection A of Section 12-505. Such disposal shall not result in pollution of the waters and soil in the city, and shall not result in any other environmental hazard, and shall incorporate the best available techniques and equipment.

B. In the event of any leakage or spillage of any pollutant or deleterious substance, whatever the cause thereof, the permittee shall cause the oil and gas inspector to be notified thereof promptly. If, in the judgment of the oil and gas inspector, such leakage or spillage represents a potential environmental hazard, he may issue whatever corrective orders he deems appropriate, and additionally may require the appropriate testing of the surface and subsurface for pollutant incursion, the cost of such test or tests to be borne by the permittee.

C. No person shall store, dispose of, or deposit saltwater or other deleterious substance in any lined or unlined earthen pit within the city limits.

D. No person shall inject any saltwater or other deleterious substance into the annulus between the inside of the surface casing string and the next inside casing string, except when the bottom of the properly cemented surface casing extends two hundred (200) feet or more through or into a continuous impermeable clay barrier below the base of treatable water. (Ord. No. 195, 9/24/84)

SECTION 12-511 COMPLIANCE WITH APPLICABLE LAWS.

No person shall drill an original well or re-enter an abandoned well for any purpose, or permit to exist any well, structure, equipment, pipeline, machinery, tank, or other appurtenance in violation of any of the provisions of this chapter or other city ordinances as may be applicable, or the laws, rules, regulations, operative standards, or directives of the State. (Ord. No. 195, 9/24/84)

SECTION 12-512 SURFACE CASING.

A. Surfacing casing requirements are as follows:

1. Surface casing shall be set a minimum of two hundred (200) feet below the deepest encounter of treatable water found in eight (8) sections adjacent to the section in which the well is located, or one thousand (1,000) feet whichever is more. Logs which identify the base of treatable water shall be run in the surface hole before the surface pipe is set. A copy of such logs shall be filed with the oil and gas inspector; or

2. Surface casing may be set without the above-required logging, provided the applicant can demonstrate to the satisfaction of the oil and gas inspector that the bottom of the surface casing will extend through or into at least two hundred (200) feet of continuous, impermeable clay barrier below the base of treatable water, is properly cemented, and cement bond logs run with the quality of the cement bond approved by the oil and gas inspector.

Surface pipe shall have a centralizer on the shoe joint, and centralizers within fifty (50) feet of the shoe joint, and centralizer no more than two hundred (200) feet apart above the second centralizer.

B. Surface pipe shall be cemented by attempting to circulate good cement to surface by normal displacement practices. If cement cannot be circulated to surface due to washed out hole or lost circulation, the existing cement shall not be overdisplaced and a plug shall be left in the bottom of the casing string to be drilled out once the surface is set. The remaining open hole behind the surface pipe shall be cemented by running a tubing string between the conduction string and the surface pipe until the top of the cement is tagged. The remaining uncemented annular space will then be cemented until good cement is circulated to surface. No further drilling shall be accomplished until the cement has set for at least twenty-four (24) hours; or in the alternative, until samples of the cement have passed independent laboratory tests satisfactory to the oil and gas inspector.

C. Where an existing well is to be used as an injection or disposal site, the existing casing and cement shall be of such integrity and depth as to adequately and safety isolate fresh water producing zones from the seepage or bleeding of injection fluids or disposants. Where additional protective operations are undertaken to comply with this paragraph, the oil and gas inspector shall be notified thereof sufficiently in advance in order for him to be present for such operations. (Ord. No. 195, 9/24/84)

SECTION 12-513 ABANDONED AND PLUGGING.

Whenever any well is abandoned it shall be the obligation of the permittee and the operator of the well to set a two hundred (200) foot cement plug in the bottom of the surface casing, with the bottom of the plug one hundred (100) feet below the surface casing section; and to set a fifty (50) foot cement plug in the top of the surface casing. No surface or conductor string of casing may be pulled or removed from a well. During initial abandonment operations it will be the obligation of the permittee and operator to flood the well with mud-laden fluid weighing not less than nine (9) pounds per gallon, and to circulate this mud until stabilized. The well shall be kept filled to the top with mud-laden fluid of the weight herein specified at all times, and mud-laden fluid of the above specifications will be left in the well bore below and between cement plugs. Any additional provisions or precautionary measures prescribed by the state or the corporation commission of the state in connection with the abandonment and plugging of a well shall be complied with by the permittee. The plugging shall be accomplished within thirty (30) days of abandonment. The oil and gas inspector shall be notified at least forty-eight (48) hours prior to any plugging operations on an abandoned well. (Ord. No. 195, 9/24/84)

SECTION 12-514 WELL LOCATION.

No permit shall be issued for the drilling of an original well or the re-entry of an abandoned well at any location except as permitted in Section 12-504 or which is closer than three hundred (300) feet to an existing producing fresh water well. (Ord. No. 195, 9/24/84)

SECTION 12-515 FENCES.

A. For all oil or gas wells within three hundred fifty (350) feet of the uses described in paragraphs 4 and 5 of Subsection A of Section 12-504, a security fence shall be installed prior to rigging up. The security fence shall be a minimum height of six (6) feet tall with barbed wire across the top, and shall be woven wire of not less than nine (9) gauge link mesh containing no

larger than two (2) inch holes, and shall completely surround the drilling site and have gates capable of being locked. The fence shall be stretched tight and shall allow access to the drilling site only through the gates. The fence posts shall be spaced not more than ten (10) feet apart.

B. Prior to operation of the pump jack or production facilities all surface facilities, including wellhead, shall be completely enclosed with a fence meeting the following standards:

1. For all oil or gas wells located within three hundred fifty (350) feet of the uses described in paragraphs 4 and 5 of Subsection A of Section 12-504, the surface facilities of the well shall be enclosed in woven wire fence of not less than nine-gauge link mesh and contain no larger than two (2) inch size holes at least six (6) feet high with locked gates. The fence shall have an angular extension, outwardly secured by three (3) strands of barbed wire which shall be placed on top of the fence. The fence shall be erected on a concrete stem wall at least eighteen (18) inches tall. The fence shall be erected not less than three (3) feet distance from the base of the production facility. The city council may require an alternate fence material or height where the described fence is deemed inadequate or is not feasible.

2. For oil and gas wells located more than three hundred fifty (350) feet from the uses described in paragraphs 4 and 5 of Subsection A of Section 12-504, all production facilities shall be enclosed in a fence meeting the following minimum standards: Five (5) strands of two (2) point, American made, barbed wire installed on six (6) feet tall T posts with posts to be located not more than ten (10) feet apart. The fence shall be erected a minimum of three (3) feet from the outside of the base of the production facility. The city council may, upon request, allow an alternate type fence or waive the fencing requirement where the barbed wire fence is not feasible or not practical. The fence shall be installed prior to installation of the pump jack or production facilities. Well head and pump jack shall be enclosed with a fence or barrier sufficient to prevent entry by livestock.

(Ord. No. 195, 9/24/84)

SECTION 12-516 DISPOSAL OF TRASH, RUBBISH, WASTE.

During drilling and all other operations the permittee or operator shall provide and use a container on the drilling site of sufficient size for disposal of all trash, rubbish, and waste accumulated during operations. All trash, rubbish, and waste shall be immediately deposited in the containers and removed from the site as necessary to prevent any accumulation on the well site. No trash, rubbish, or waste shall be deposited on or buried in the ground at the well site. (Ord. No. 195, 9/24/84)

SECTION 12-517 NOISE AND OTHER NUISANCES.

All oil operations, drilling and production operations shall be conducted in such a manner as to eliminate, as far as practicable, dust, noise, vibration, or noxious odors, and shall be in accordance with the best accepted practices incident to exploration for, drilling for, and production of oil, gas, and other hydrocarbon substances. Proven technological improvements in exploration, drilling, and production methods shall be adopted as they become, from time to time, available if capable of reducing factors of nuisance and annoyance. (Ord. No. 195, 9/24/84)

SECTION 12-518 FACILITIES.

All lease equipment shall be painted and maintained in a good state of appearance, and

shall have posted in a prominent place a metal sign no less than two (2) square feet in area upon which the following information shall be conspicuous:

1. Permittee's name;

2. Lease name;

3. Location of the drill site by reference to the United States survey; and

4. Identifying number of the permit issued by the city.

The sign shall be installed prior to installation of production facility. (Ord. No. 195, 9/24/84)

SECTION 12-519 STORAGE TANKS AND SEPARATORS.

A permittee may use, construct, and operate a steel conventional separator and such other steel tanks and appurtenances as are necessary for treating oil with each of such facilities to be so constructed and maintained as to be vapor tight. Each oil, gas separator shall be equipped with both a regulation pressure-relief safety valve and a bursting head. All crude oil tanks shall be subject to the following requirements:

1. The tanks shall be painted within ninety (90) days after installation and maintained in proper painted condition thereafter and have conspicuously upon their side in red letters at lest six (6) inches high, the wording "flammable keep away," and "no smoking";

2. All oil, saltwater, or other storage tanks shall have roofs or tops and the opening of the tanks shall be fully protected; the tops shall be fully protected; the tops shall be firmly and securely jointed to the tanks and all joints on both sides and top shall be gas tight and free from leakage as nearly as possible and shall be locked. Provided, for wells located more than three hundred fifty (350) feet from the uses set forth in paragraphs 4 and 5 of Subsection A of Section 12-504, open tanks may be used for saltwater storage;

3. Tanks, the bases of which are more than one foot above ground shall have foundation and support of non-combustible material;

4. No artificial light, except as now approved by the U.S. Bureau of Mines for use in an explosive atmosphere, shall be used within forty (40) feet of tanks, or of any well after such well is completed as a producer of oil or gas;

5. All tanks shall be provided with a pressure vacuum vent system sufficient to adequately dispense excess gas from the tanks. Vent openings may be removable, but shall be kept firmly attached. The covers for manholes, handholes, and gauge holes shall be made tight fitting and lockable;

6. For all oil or gas wells located within three hundred fifty (350) feet of the uses described in paragraphs 4 and 5 of Subsection A of Section 12-504, all surface production equipment, with the exception of the heater/treater, shall be a low profile not to exceed fifteen (15) feet in height; and

7. For all wells located within three hundred fifty (350) feet of the uses described in paragraphs 4 and 5 of Subsection A of Section 12-504, during production trucks may drain or

otherwise service tank batteries only between the hours of 7:00 A.M. and 7:00 P.M. This shall not apply where an emergency situation requires service of the well to prevent damage to the well, adjacent land, fresh water, or eminent danger to the citizens of the city.

(Ord. No. 195, 9/24/84)

SECTION 12-520 PITS.

Mud of circulating pits shall be steel. Such pits and contents shall be removed from the premises and the drilling of the well, and same shall be covered or enclosed so as to prevent entry by unauthorized persons. Earthen pits will be allowed only as temporary emergency pits or as catch basins. Catch basin pits shall be used only for the purpose of catching any deleterious substance runoff and shall be not greater than three hundred twenty (320) cubic feet. Such catch basin will be equipped with a liquid level activated pump designed to keep fluids pumped out of such catch basin pit. All such earthen pits must be lined and approved in writing by the oil and gas inspector. Emergency pits shall be emptied as soon as the emergency is over and all such pits shall be emptied and then leveled within fifteen (15) days after completion rig leaves site. The provisions of this section shall not apply to oil or gas wells located more than three hundred fifty (350) feet from the uses described in paragraphs 4 and 5 of Subsection A of Section 12-504. (Ord. No. 195, 9/24/84)

SECTION 12-521 RETAINING WALLS.

Any tank, batteries, separators, heater treaters, and other production facilities shall be enclosed with earthen or other acceptable retaining walls with a storage capacity of at least one and one-half (1 1/2) times the liquid capacity of the tanks within the storage area. (Ord. No. 195, 9/24/84)

SECTION 12-522 MOTIVE POWER.

All pumping equipment shall be electrically powered if electric power is reasonably available. If electric power is not reasonably available the pumping equipment shall be muffled as to produce no more than 70 DBA of noise at a distance of thirty-three (33) feet from the muffler exit to be monitored in line with the exit and the exit shall be directed away from the nearest dwelling. Electrically powered pumping equipment is not required where the well is located more than three hundred fifty (350) feet from the uses described in paragraphs 4 and 5 of Subsection A of Section 12-504, but the noise level and exit requirements shall be applicable, and the muffler shall be of a "hospital standard" type. (Ord. No. 195, 9/24/84)

SECTION 12-523 DRILLING OPERATIONS; EQUIPMENT.

All drilling, re-entry, and operations at any well performed under this chapter shall be conducted in accordance with the best practices of the reasonably prudent operator. All casing, valves, and blowout preventers, drilling fluid, tubing, bradenhead, christmas tree, and wellhead connections shall be of a type and quality consistent with the best practices of such reasonably prudent operator. Setting and cementing casing and running drill stem tests shall be performed in a manner and at a time consistent with the best practices of such reasonably prudent operator. Any permittee under this chapter shall observe and follow the recommendations or regulations of the American Petroleum Institute and the Corporate Commission, except in those instances that are specifically addressed by this chapter. A copy of all logs associated with the surface casing shall be filed with the oil and gas inspector. During drilling operations all engines shall be muffled with

factory-standard mufflers. (Ord. No. 195, 9/24/84)

SECTION 12-524 STREETS AND ALLEYS.

No well shall be drilled and no permit shall be issued for any well to be drilled at any location which is within any of the streets or alleys of the city; and no street or alley shall be blocked, encumbered, or closed in any drilling or production operation except with the written approval of the oil and gas inspector, and then only temporarily. (Ord. No. 195, 9/24/84)

SECTION 12-525 FLARING/BURNING OF GAS.

Each burning of gas, paraffin, or other substances at the well site shall be permitted only by special permit issued in advance by the oil and gas inspector. The oil and gas inspector may deny such permit when due to weather or other circumstances the burning would constitute a nuisance or hazard to surrounding properties. During swabbing operations a permit may be issued by the oil and gas inspector for flaring or burning throughout the swabbing operations. (Ord. No. 195, 9/24/84)

SECTION 12-526 FRACTURE AND ACIDIZING.

In the completion of oil and gas, injection, disposal, or service well, when acidizing or fracturing processes are used, no oil, gas, or other deleterious substances or pollutants shall be permitted to pollute any soil, air, surface or subsurface fresh waters. (Ord. No. 195, 9/24/84)

SECTION 12-527 SWABBING AND BAILING.

In swabbing, bailing, or purging a well all deleterious substances removed from the bore hole shall be placed in appropriate tanks and no substances shall be permitted to pollute any soil, air, surface or subsurface fresh waters. (Ord. No. 195, 9/24/84)

SECTION 12-528 RUPTURE IN SURFACE CASING.

In the event a rupture, break, or opening occurs in the surface or production casing, the permittee, operator, or drilling contractor shall take immediate action to repair it, and shall report the incident to the oil and gas inspector promptly. (Ord. No. 195, 9/24/84)

SECTION 12-529 TRANSMISSION LINES.

All transmission or production lines for oil and gas located outside the production fence shall be buried and maintained to a minimum cover of forty-eight (48) inches below grade. All lines carrying corrosive material shall be plastic-coated internally, and if soil conditions warrant, shall be cathodically protected or plastic coated. A tracer wire shall be installed with all plastic pipe installed outside the production fence. (Ord. No. 195, 9/24/84)

SECTION 12-530 DEPOSITING OIL PRODUCTS.

No person shall deposit, drain, or divert into or upon any land, highway, street, alley, drainage ditch, storm drain, sewer, gutter, paving, creek, river, lake, or lagoon, any oil or oily liquid with petroleum content or any mud, rotary mud, sand, water, or saltwater, or in any manner permit by seepage, overflow, deliberate release, or otherwise any of such substances to escape from any property owned, leased, or controlled by such person and flow or be carried into or upon

any land, highway, street, alley, drainage ditch, storm drain, sewer, gutter, paving, creek, river, lake, or lagoon within the city. Upon completion of drilling all contaminated soil shall be removed from the site or buried and the area restored to the normal condition insofar as possible. (Ord. No. 195, 9/24/84)

SECTION 12-531 SAFETY PRECAUTIONS.

Persons drilling, operating, or maintaining any well shall use all necessary care and take all precautions which shall be reasonably necessary under the circumstances to protect the public. The provisions of this chapter shall be deemed to be the minimum requirements for the preservation of the public health, safety, and welfare, and compliance with the terms hereof shall not be deemed to relieve any persons of any additional duty imposed by law. (Ord. No. 195, 9/24/84)

SECTION 12-532 OIL AND GAS INSPECTOR.

A. The city administrator may employ a qualified person, persons, firm, or corporation as an oil and gas inspector, whose duty it shall be to enforce the provisions of this chapter.

B. The oil and gas inspector shall have the authority to issue such orders or directives as are required to carry out the intent and purpose of this chapter and its particular provisions. Failure to abide by any such order or directive shall be a violation of this chapter.

C. The oil and gas inspector shall have the authority to go upon and inspect any premises covered by the terms of this chapter to ascertain whether this chapter and the applicable laws, rules, regulations, standards, or directives of the state are being complied with. Failure to permit access to the oil and gas inspector shall be deemed a violation of this chapter.

D. The oil and gas inspector shall have the authority to request and receive any records specified in this chapter relating to the status or condition of any well or project, or the appurtenances thereof, within the city. Failure to provide any such requested material shall be deemed a violation of this chapter. (Ord. No. 195, 9/24/84)

SECTION 12-533 ACCUMULATION OF VAPOR.

The oil and gas inspector shall have the authority to require the immediate shutting in or closing of any well if he finds that there exists, within a one hundred (100) foot radius of any well, any gas or gasoline vapor in a quantity sufficient to constitute a fire hazard. The well shall remain shut or closed in until the hazard and its cause are removed. (Ord. No. 195, 9/24/84)

SECTION 12-534 INSPECTION OF PRESSURE LINES.

The oil and gas inspector shall have the authority to inspect all pressure lines in use at any well or at any project to assure that tubing, fittings, equipment, or connections are reasonably tight, safe, and free from leaks. (Ord. No. 195, 9/24/84)

SECTION 12-535 INGRESS AND EGRESS.

Lease roads shall be maintained in such a manner as to safely and comfortably allow for ingress and egress of city or state personnel traveling in a common passenger motor vehicle. All ingress and egress to oil and gas sites shall be from section line roads, and all lease roads shall be

overlaid and maintained with gravel prior to rigging up so as to provide a driving surface that will prevent mud and dirt from being left on public roads. Where use of section line roads for access is not feasible, the city council may grant authority for an alternate access to the drilling site. (Ord. No. 195, 9/24/84)

SECTION 12-536 ORDER TO CEASE OPERATIONS.

A. If the oil and gas inspector finds that, in his judgment, an immediate threat or imminent peril to personal property, life, or natural resources exists, he shall order immediate rectification of the cause. If the permittee takes no immediate measure to reduce the hazard, or if the situation be so perilous as to constitute an imminent threat to safety, then in either of these events he may order the prompt cessation of activity, and if necessary, the clearance of the premises.

B. The oil and gas inspector shall apply to the city administrator for a hearing upon such order, which hearing shall be held not longer than twenty-four (24) hours after the issuance of the order by the oil and gas inspector. The city administrator shall determine if proper cause existed, and if not, shall order the permittee's activity to resume without delay. If the city administrator determines that proper cause did exist for the order to cease activity to issue, then he shall make whatever ruling is proper to assure rectification of the cause of the peril. Such ruling and compliance with it by the permittee shall not be construed to absolve the permittee of any liability for any violation of this chapter, or for any damage or injury caused thereby. (Ord. No. 195, 9/24/84)

SECTION 12-537 APPEALS.

Any permittee aggrieved by any order, directives or ruling issued by the oil and gas inspector, or by any ruling by the city administrator may appeal the same to the city council which shall hear the matter at its next scheduled meeting. The lodging of such appeal shall not stay the enforcement of any of the provisions of this chapter. The council, upon hearing the matter, may issued whatever ruling or order is appropriate, provided that such ruling or order be in keeping with the spirit and purpose of this chapter. (Ord. No. 195, 9/24/84)

SECTION 12-538 CITY COUNCIL REVIEW OF PERMIT RECOMMENDATIONS.

Upon the consideration of any application for a permit required by the terms of this chapter the oil and gas inspector shall recommend approval or disapproval hereof to the mayor and city council, who shall review the mater at a regularly-scheduled meeting and thereupon uphold or reverse the recommendation with or without the addition of any conditions thereto. The oil and gas inspector may issue permits required by this chapter where the proposed well is more than three hundred fifty (350) feet from the uses described in paragraphs 4 and 5 of Subsection A of Section 12-504, without approval of the mayor and city council. (Ord. No. 195, 9/24/84)

SECTION 12-539 CONDUITS ON STREETS AND ALLEY.

A. No permittee shall make any excavations or construct any lines for the conveyance of fuel, water, or minerals on, under, or through the streets and alleys of the city without first having obtained a permit therefor upon application to the city administrator.

B. The city administrator shall prescribe the forms to be used for such application and the information to accompany it.

C. Each application for a permit under this section shall be accompanied by a non-refundable filing fee.

D. The city administrator shall, within twenty (20) days of receipt of the properly executed application, either grant or deny the request.

E. The granting of any such permit shall not be construed to be the granting of a franchise. (Ord. No. 195, 9/24/84)

SECTION 12-540 ANNUAL FEE FOR CONDUITS.

A. The permittee under Section 12-539 of this chapter shall pay to the city an annual renewal and inspection fee per rod of conduit multiplied by the number of rods in the conduit for which the permit was issued.

B. The city administrator shall appoint a representative who shall inspect such conduits to assure the public safety. No permit issued under Section 12-539 of this chapter shall be renewed if the conduit or any part thereof covered by such permit is in an unsafe condition. (Ord. No. 195, 9/24/84)

SECTION 12-541 APPLICABILITY TO EXISTING CONDITIONS.

This chapter shall apply to any person drilling an original well, re-entering an abandoned well, conducting natural or artificial production projects or operations, or maintaining a disposal well within the city. Every such person shall have no longer than ninety (90) days after September 24, 1984 to come into compliance with this chapter. Provided, that:

1. No additional permit fees shall be charged such person;

2. No penalties shall be sought against any activity violative of this chapter where such activity pre-existed the adoption of this chapter and was otherwise in compliance with the applicable state law, rules, regulations, standards, or directives.

(Ord. No. 195, 9/24/84)

SECTION 12-542 PENALTIES.

It shall be unlawful and an offense for any person to violate or neglect to comply with any provisions hereof irrespective of whether or not the verbiage of each section hereof contains the specific language that such violation or neglect is unlawful and is an offense. Any person who shall violate any of the provisions of this chapter or any of the provisions of a drilling and operation permit issued pursuant hereto, or any condition of the bond filed by the permittee pursuant to this chapter, or who shall neglect to comply with the terms hereof shall be punished as provided in Section 1-108 of this code. The violation of each separate provision of this chapter, and of the permit, and of the bond shall be considered a separate offense, and each day's violation of each separate provision thereof shall be considered a separate offense. In addition to the foregoing penalties, it is further provided that the city council at any regular or special session or meeting thereof may, provided ten (10) days notice has been given to the permittee that revocation is to be considered at such meeting, revoke or suspend any permit issued under this chapter and under which drilling or producing operations are being conducted in the event the permittee thereof has

violated any provision of the permit, the bond, or this chapter. In the event the permit be revoked the permittee may make application to the oil and gas inspector for re-issuance of such permit, and the action of the city thereof shall be final. Any continuing offense shall be considered a public nuisance the remedies for which, under law, shall be in addition to those hereinbefore enumerated. (Ord. No. 195, 9/24/84)

SECTION 12-543 INJUNCTIVE RELIEF.

In addition to the penalties herein provided the city may seek injunctive relief to the district court to enjoin violation by the person, company, or other business entity causing the violation. In addition if the drilling or operation of any oil or gas well is causing an immediate threat to the public safety or immediate danger to person or property, the city may seek injunctive relief even though such is not a violation of this chapter. (Ord. No. 195, 9/24/84)

CHAPTER 6

FLOOD DAMAGE PREVENTION

Section 12-601	Statutory Authorization, Findings of Fact, Purpose and Methods.
Section 12-602	Definitions.
Section 12-603	General Provisions.
Section 12-604	Administration.
Section 12-605	Provisions of Flood Hazard Reduction.

SECTION 12-601 STATUTORY AUTHORIZATION, FINDINGS OF FACT, PURPOSE AND METHODS.

A. STATUTORY AUTHORIZATION

The Legislature of the State of Oklahoma has in (statutes) 82 O.S. §§1601-1618, as amended, Chapter 23 delegated the responsibility of local governmental units to adopt regulations designed to minimize flood losses. Therefore, the City of Piedmont, Canadian County, Floodplain Board adopts the following floodplain management regulations:

B. FINDINGS OF FACT

(1) The flood hazard areas of the incorporated areas of the City of Piedmont, Oklahoma are subject to periodic inundation, which results in loss of life and property, health and safety hazards, disruption of commerce and governmental services, and extraordinary public expenditures for flood protection and relief, all of which adversely affect the public health, safety and general welfare.

(2) These flood losses are created by the cumulative effect of obstructions in floodplains which cause an increase in flood heights and velocities, and by the occupancy of flood hazards areas by uses vulnerable to floods and hazardous to other lands because they are inadequately elevated, floodproofed or otherwise protected from flood damage.

C. STATEMENT OF PURPOSE

It is the purpose of these regulations to promote the public health, safety and general welfare and to minimize public and private losses due to flood conditions in specific areas by provisions designed to:

1. Protect human life and health;

2. Minimize expenditure of public money for costly flood control projects;

3. Minimize the need for rescue and relief efforts associated with flooding and generally undertaken at the expense of the general public;

4. Minimize prolonged business interruptions;

5. Minimize damage to public facilities and utilities such as water and gas mains, electric, telephone and sewer lines, streets and bridges located in floodplains;

6. Help maintain a stable tax base by providing for the sound use and development of flood-prone areas in such a manner as to minimize future flood blight areas; and

7. Insure that potential buyers are notified that property is in a flood area.

D. METHODS OF REDUCING FLOOD LOSSES

1. In order to accomplish its purposes, these regulations use the following methods:

2. Restrict or prohibit uses that are dangerous to health, safety or property in times of flood, or cause excessive increases in flood heights or velocities;

3. Require that uses vulnerable to floods, including facilities which serve such uses, be protected against flood damage at the time of initial construction;

4. Control the alteration of natural floodplains, stream channels, and natural protective barriers, which are involved in the accommodation of flood waters;

5. Control filling, grading, dredging and other development which may increase flood damage;

6. Prevent or regulate the construction of flood barriers which will unnaturally divert floodwaters or which may increase flood hazards to other lands.

SECTION 12-602 DEFINITIONS.

Unless specifically defined below, words or phrases used in these regulations shall be interpreted to give them the meaning they have in common usage and to give these regulations their most reasonable application.

ACCESSORY STRUCTURE - Structures which are on the same parcel of property as the principle structure and the use of which is incidental to the use of the principle structure (such as garages and storage sheds).

ALLUVIAL FAN FLOODING - means flooding occurring on the surface of an alluvial fan or similar landform which originates at the apex and is characterized by high-velocity flows; active processes of erosion, sediment transport, and deposition; and unpredictable flow paths.

APEX - means a point on an alluvial fan or similar landform below which the flow path of the major stream that formed the fan becomes unpredictable and alluvial fan flooding can occur.

AREA OF SHALLOW FLOODING - means a designated AO or AH zone on a community's Flood Insurance Rate Map (FIRM) with a one percent chance or greater annual chance of flooding to an average depth of one to three feet where a clearly defined channel does not exist, where the path of flooding is unpredictable and where velocity flow may be evident. Such flooding is characterized by ponding or sheet flow.

AREA OF SPECIAL FLOOD HAZARD - is the land in the floodplain within a community subject to a one percent or greater chance of flooding in any given year. After detailed ratemaking has been completed in preparation for publication of the FIRM, Zone A usually is refined into Zones A, AE, AH, AO or A1-99.

BASE FLOOD - means the flood having a one percent chance of being equaled or exceeded in any given year.

BASE FLOOD ELEVATION – means the elevation in feet above mean sea level of the 1% chance flood as defined as the base flood shown above.

BASEMENT - means any area of the building having its floor sub-grade (below ground level) on all sides.

BOARD – means the Oklahoma Water Resources Board.

CRITICAL FEATURE - means an integral and readily identifiable part of a flood protection system, without which the flood protection provided by the entire system would be compromised.

DEVELOPMENT - means any man-made change in improved and unimproved real estate, including but not limited to buildings or other structures, mining, dredging, filling, grading, paving, excavation or drilling operations or storage of equipment or materials.

ELEVATED BUILDING - means a non-basement building (i) built, in the case of a building in Zones A1-30, AE, A, A99, AO, AH, B, C, X, and D, to have the top of the elevated floor. In the case of Zones A1-30, AE, A, A99, AO, AH, B, C, X, and D, "elevated building" also includes a building elevated by means of fill or solid foundation perimeter walls with openings sufficient to facilitate the unimpeded movement of flood waters.

EXISTING CONSTRUCTION - means for the purposes of determining rates, structures for which the "start of construction" commenced before the effective date of the FIRM or before January 1, 1975, for FIRMs effective before that date. "Existing construction" may also be referred to as "existing structures."

EXISTING MANUFACTURED HOME PARK OR SUBDIVISION - means a manufactured home park or subdivision for which the construction of facilities for servicing the lots on which the manufactured homes are to be affixed (including, at a minimum, the installation of utilities, the construction of streets, and either final site grading or the pouring of concrete pads) is

completed before the effective date of the floodplain management regulations adopted by a community.

EXPANSION TO AN EXISTING MANUFACTURED HOME PARK OR SUBDIVISION- means the preparation of additional sites by the construction of facilities for servicing the lots on which the manufactured homes are to be affixed (including the installation of utilities, the construction of streets, and either final site grading or the pouring of concrete pads).

FLOOD OR FLOODING - means a general and temporary condition of partial or complete inundation of normally dry land areas from:

1. The overflow of inland or tidal waters.

2. The unusual and rapid accumulation or runoff of surface waters from any source.

FLOOD INSURANCE RATE MAP (FIRM) - means an official map of a community, on which the Federal Emergency Management Agency has delineated both the areas of special flood hazards and the risk premium zones applicable to the community.

FLOOD INSURANCE STUDY - is the official report provided by the Federal Emergency Management Agency. The report contains flood profiles, floodway data and the water surface elevation of the base flood along with the Flood Insurance Rate Maps (FIRM).

FLOODPLAIN ADMINISTRATOR – means a person accredited by the Board and designated by a floodplain board, to administer and implement laws and regulations relating to the management of the floodplains.

FLOODPLAIN OR FLOOD-PRONE AREA - means any land area susceptible to being inundated by water from any source (see definition of flooding).

FLOODPLAIN MANAGEMENT - means the operation of an overall program of corrective and preventive measures for reducing flood damage, including but not limited to emergency preparedness plans, flood control works and floodplain management regulations.

FLOODPLAIN MANAGEMENT REGULATIONS - means zoning ordinances, subdivision regulations, building codes, health regulations, special purpose ordinances (such as a floodplain ordinance, grading ordinance and erosion control ordinance) and other applications of police power. The term describes such state or local regulations, in any combination thereof, which provide standards for the purpose of flood damage prevention and reduction.

FLOOD PROTECTION SYSTEM - means those physical structural works for which funds have been authorized, appropriated, and expended and which have been constructed specifically to modify flooding in order to reduce the extent of the areas within a community subject to a "special flood hazard" and the extent of the depths of associated flooding. Such a system typically includes hurricane tidal barriers, dams, reservoirs, levees or dikes. These specialized flood modifying works are those constructed in conformance with sound engineering standards.

(This page intentionally left blank)

FLOOD PROOFING - means any combination of structural and non-structural additions, changes, or adjustments to structures which reduce or eliminate flood damage to real estate or improved real property, water and sanitary facilities, structures and their contents.

FLOODWAY (REGULATORY FLOODWAY) - means the channel of a river or other watercourse and the adjacent land areas that must be reserved in order to discharge the base flood without cumulatively increasing the water surface elevation more than a designated height.

FUNCTIONALLY DEPENDENT USE - means a use that cannot perform its intended purpose unless it is located or carried out in close proximity to water. The term includes only docking facilities, port facilities that are necessary for the loading and unloading of cargo or passengers, and ship building and ship repair facilities, but does not include long-term storage or related manufacturing facilities.

HIGHEST ADJACENT GRADE - means the highest natural elevation of the ground surface prior to construction next to the proposed walls of a structure.

HISTORIC STRUCTURE - means any structure that is:

1. Listed individually in the National Register of Historic Places (a listing maintained by the Department of Interior) or preliminarily determined by the Secretary of the Interior as meeting the requirements for individual listing on the National Register;

2. Certified or preliminarily determined by the Secretary of the Interior as contributing to the historical significance of a registered historic district or a district preliminarily determined by the Secretary to qualify as a registered historic district;

3. Individually listed on a state inventory of historic places in states with historic preservation programs which have been approved by the Secretary of Interior; or

4. Individually listed on a local inventory or historic places in communities with historic preservation programs that have been certified either:

    a) By an approved state program as determined by the Secretary of the Interior or;

    b) Directly by the Secretary of the Interior in states without approved programs.

LEVEE - means a man-made structure, usually an earthen embankment, designed and constructed in accordance with sound engineering practices to contain, control, or divert the flow of water so as to provide protection from temporary flooding.

LEVEE SYSTEM - means a flood protection system, which consists of a levee, or levees, and associated structures, such as closure, and drainage devices, which are constructed and operated in accordance with sound engineering practices.

LOWEST FLOOR - means the lowest floor of the lowest enclosed area (including basement). An unfinished or flood resistant enclosure, usable solely for parking or vehicles, building access

or storage in an area other than a basement area is not considered a building's lowest floor; provided that such enclosure is not built so as to render the structure in violation of the applicable non-elevation design requirement of Section 60.3 of the National Flood insurance Program regulations.

MANUFACTURED HOME - means a structure transportable in one or more sections, which is built on a permanent chassis and is designed for use with or without a permanent foundation when connected to the required utilities. The term "manufactured home" does not include a "recreational vehicle".

MANUFACTURED HOME PARK OR SUBDIVISION - means a parcel (or contiguous parcels) of land divided into two or more manufactured home lots for rent or sale.

MEAN SEA LEVEL - means, for purposes of the National Flood Insurance Program, the National Geodetic Vertical Datum (NGVD) of 1929 or other datum, to which base flood elevations shown on a community's Flood Insurance Rate Map are referenced.

NEW CONSTRUCTION - means, for the purpose of determining insurance rates, structures for which the "start of construction" commenced on or after the effective date of an initial FIRM or after December 31, 1974, whichever is later, and includes any subsequent improvements to such structures. For floodplain management purposes, "new construction" means structures for which the "start of construction" commenced on or after the effective date of a floodplain management regulation adopted by a community and includes any subsequent improvements to such structures.

NEW MANUFACTURED HOME PARK OR SUBDIVISION - means a manufactured home park or subdivision for which the construction of facilities for servicing the lots on which the manufactured homes are to be affixed (including at a minimum, the installation of utilities, the construction of streets, and either final site grading or the pouring of concrete pads) is completed on or after the effective date of floodplain management regulations adopted by a community.

RECREATIONAL VEHICLE - means a vehicle which is:

1. Built on a single chassis;
2. 400 square feet or less when measured at the largest horizontal projections;
3. Designed to be self-propelled or permanently towable by a light duty truck; and
4. Designed primarily not for use as a permanent dwelling but as temporary living quarters for recreational, camping, travel, or seasonal use

START OF CONSTRUCTION - (for other than new construction or substantial improvements under the Coastal Barrier Resources Act (Pub. L. 97-348)), includes substantial improvement and means the date the building permit was issued, provided the actual start of construction, repair, reconstruction, rehabilitation, addition, placement, or other improvement was within 180 days of the permit date. The actual start means either the first placement of permanent construction of a structure on a site, such as the pouring of slab or footings, the installation of piles, the construction of columns, or any work beyond the stage of excavation; or the placement of a manufactured home on a foundation. Permanent construction does not include land preparation, such as clearing, grading and filling; nor does it include the installation of streets and/or walkways; nor does it include excavation

for basement, footings, piers or foundations or the erection of temporary forms; nor does it include the installation on the property of accessory buildings, such as garages or sheds not occupied as dwelling units or not part of the main structure. For a substantial improvement, the actual start of construction means the first alteration of any wall, ceiling, floor, or other structural part of a building, whether or not that alteration affects the external dimensions of the building.

STRUCTURE - means a walled and roofed building, including a gas or liquid storage tank, that is principally above ground, as well as a manufactured home.

SUBSTANTIAL DAMAGE - means damage of any origin sustained by a structure whereby the cost of restoring the structure to its before damaged condition would equal or exceed 50 percent of the market value of the structure before the damage occurred.

SUBSTANTIAL IMPROVEMENT - means any reconstruction, rehabilitation, addition, or other improvement of a structure, the cost of which equals or exceeds 50 percent of the market value of the structure before "start of construction" of the improvement. This includes structures that have incurred "substantial damage", regardless of the actual repair work performed. The term does not, however, include either:

1. Any project for improvement of a structure to correct existing violations of state or local health, sanitary, or safety code specifications which have been identified by the local code enforcement official and which are the minimum necessary conditions or

2. Any alteration of a "historic structure" provided that the alteration would not preclude the structure's continued designation as a "historic structure."

VARIANCE - is a grant of relief to a person from the requirement of these regulations or ordinance when specific enforcement would result in unnecessary hardship. A variance, therefore, permits construction or development in a manner otherwise prohibited by these regulations. (For full requirements see Section 60.6 of the National Flood Insurance Program regulations.)

VIOLATION - means the failure of a structure or other development to be fully compliant with this community's floodplain management regulations. A structure or other development without the elevation certificate, other certifications, or other evidence of compliance required in Section 60.3(b)(5), (c)(4), (c)(10) or (d)(3) is presumed to be in violation until such time as that documentation is provided.

WATER SURFACE ELEVATION - means the height, in relation to the National Geodetic Vertical Datum (NGVD) of 1929 (or other datum, where specified), of floods of various magnitudes and frequencies in the floodplains of coastal or riverine areas.

SECTION 12-603 GENERAL PROVISION.

A. LANDS TO WHICH THESE REGULATIONS APPLY. These floodplain management regulations shall apply to all areas of special flood hazard within the jurisdiction of the incorporated limits of the City of Piedmont, Canadian County, Oklahoma.

B. BASIS FOR ESTABLISHING THE AREAS OF SPECIAL FLOOD HAZARD. The areas of special flood hazard identified by the Federal Emergency Management Agency in a scientific and engineering report entitled, "The Flood Insurance Study for "Canadian County and Incorporated Areas," dated September 26, 2008, along with the Flood Insurance Rate Maps (FIRM) are hereby adopted by reference and declared to be a part of these regulations. These regulations shall go into effect on September 26, 2008, and until this time the current Piedmont Flood Damage Prevention Ordinance shall remain in effect.

C. ESTABLISHMENT OF DEVELOPMENT PERMIT. A Development Permit shall be required to ensure conformance with the provisions of these floodplain management regulations.

D. COMPLIANCE. No structure or land shall hereafter be located, altered, or have its use changed without full compliance with the terms of these regulations and other applicable regulations.

E. ABROGATION AND GREATER RESTRICTIONS. These regulations are not intended to repeal, abrogate, or impair any existing easements, covenants, or deed restrictions. However, where these regulations and another ordinance, easement, covenant, or deed restriction conflict or overlap, whichever imposes the more stringent restrictions shall prevail.

F. INTERPRETATION. In the interpretation and application of this ordinance, all provisions shall be:

1. Considered as minimum requirements;

2. Liberally construed in favor of the governing body; and

3. Deemed neither to limit nor repeal any other powers granted under State statutes.

G. WARNING AND DISCLAIMER OR LIABILITY. The degree of flood protection required by these regulations is considered reasonable for regulatory purposes and is based on scientific and engineering considerations. On rare occasions greater floods can and will occur and flood heights may be increased by man-made or natural causes. These regulations do not imply that land outside the areas of special flood hazards or uses permitted within such areas will be free from flooding or flood damages. These regulations shall not create liability on the part of the community or any official or employee thereof for any flood damages that result from reliance on these regulations or any administrative decision lawfully made hereunder.

SECTION 12-604 ADMINISTRATION.

A. DESIGNATION OF THE FLOODPLAIN ADMINISTRATOR. The City of Piedmont hereby appoints the Community Development Director as Floodplain Administrator to administer and implement the provisions of these regulations and other appropriate sections of 44 CFR (National Flood Insurance Program Regulations) pertaining to floodplain management.

B. DUTIES & RESPONSIBILITIES OF THE FLOODPLAIN ADMINISTRATOR. Duties and responsibilities of the Floodplain Administrator shall include, but not be limited to, the following:

1. Maintain and hold open for public inspection all records pertaining to the provisions of these regulations.

2. Review permit application to determine whether proposed building site, including the placement of manufactured homes, will be reasonably safe from flooding.

3. Review, approve or deny all applications for development permits required by adoption of these regulations.

4. Review permits for proposed development to assure that all necessary permits have been obtained from those Federal, State or local governmental agencies (including Section 404 of the Federal Water Pollution Control Act Amendments of 1972, 33 U.S.C. 1334) from which prior approval are required.

5. Where interpretation is needed as to the exact location of the boundaries of the areas of special flood hazards (for example, where there appears to be a conflict between a mapped boundary and actual field conditions) the Floodplain Administrator shall make the necessary interpretation.

6. Notify, in riverine situations, adjacent communities and the State Coordinating Agency, the Oklahoma Water Resources Board, prior to any alteration or relocation of a watercourse, and submit evidence of such notification to the Federal Emergency Management Agency.

7. Assure that the flood carrying capacity within the altered or relocated portion of any watercourse is maintained.

8. When base flood elevation data has not been provided in accordance with Article 3, Section B, the Floodplain Administrator shall obtain, review and reasonably utilize any base flood elevation data and floodway data available from a Federal, State or other source, in order to administer the provisions of Article 5.

9. When a regulatory floodway has not been designated, the Floodplain Administrator must require that no new construction, substantial improvements, or other development (including fill) shall be permitted within Zones A1-30 and AE on the community's FIRM, unless it is demonstrated that the cumulative effect of the proposed development, when combined with all other existing and anticipated development, will not increase the water surface elevation of the base flood more than one foot at any point within the community.

10. Under the provisions of 44 CFR Chapter 1, Section 65.12, of the National Flood Insurance Program regulations, a community may approve certain development in Zones A1-30, AE, AH, on the community's FIRM which increases the water surface elevation of the base flood by more than one foot, provided that the community **first** applies for a conditional FIRM revision through FEMA (Conditional Letter of Map Revision).

11. Become accredited by the Board in accordance with Title 82 O.S. §§ 1601-1618, as amended.

12. After a disaster or other type of damage occurrence to structures in the incorporated limits of the City of Piedmont determine if the residential & non-residential structures & manufactured homes have been substantially damaged and enforce the substantial improvement requirement.

SECTION C. PERMIT PROCEDURES

Application for a Development Permit shall be presented to the Floodplain Administrator on forms furnished by him/her and may include, but not be limited to, plans in duplicate drawn to scale showing the location, dimensions, and elevation of proposed landscape alterations, existing and proposed structures, including the placement of manufactured homes, and the location of the foregoing in relation to areas of special flood hazard. Additionally, the following information is required:

1. Elevation (in relation to mean sea level), of the lowest floor (including basement) of all new and substantially improved structures;

2. Elevation in relation to mean sea level to which any nonresidential structure shall be floodproofed;

3. A certificate from a registered professional engineer or architect that the nonresidential floodproofed structure shall meet the floodproofing criteria of Article 5, Section B (2);

4. Description of the extent to which any watercourse or natural drainage will be altered or relocated as a result of proposed development.

5. Maintain a record of all such information in accordance with Article 4, Section (B)(1).

Approval or denial of a Development Permit by the Floodplain Administrator shall be based on all of the provisions of these regulations and the following relevant factors:

1. The danger to life and property due to flooding or erosion damage;

2. The susceptibility of the proposed facility and its contents to flood damage and the effect of such damage on the individual owner;

3. The danger that materials may be swept onto other lands to the injury of others;

4. The compatibility of the proposed use with existing and anticipated development;

5. The safety of access to the property in times of flood for ordinary and emergency vehicles;

6. The costs of providing governmental services during and after flood conditions including maintenance and repair of streets and bridges, and public utilities and facilities such as sewer, gas, electrical and water systems;

7. The expected heights, velocity, duration, rate of rise and sediment transport of the flood waters and the effects of wave action, if applicable, expected at the site;

8. The necessity to the facility of a waterfront location, where applicable;

9. The availability of alternative locations, not subject to flooding or erosion damage, for the proposed use;

10. The relationship of the proposed use to the comprehensive plan for that area.

SECTION D. VARIANCE PROCEDURES

1. The appeal Board which is the Piedmont Board of Adjustment shall hear and render judgment on requests for variances from the requirements of these regulations.

2. The Appeal Board shall hear and render judgment on an appeal only when it is alleged there is an error in any requirement, decision, or determination made by the Floodplain Administrator in the enforcement or administration of these regulations.

3. Any person or persons aggrieved by the decision of the Appeal Board may appeal such decision in the courts of competent jurisdiction.

4. The Floodplain Administrator shall maintain a record of all actions involving an appeal and shall report variances to the Federal Emergency Management Agency upon request.

5. Variances may be issued for the reconstruction, rehabilitation or restoration of structures listed on the National Register of Historic Places or the State Inventory of Historic Places, without regard to the procedures set forth in the remainder of these regulations.

6. Variances may be issued for new construction and substantial improvements to be erected on a lot of one-half acre or less in size contiguous to and surrounded by lots with existing structures constructed below the base flood level, providing the relevant factors in Section C (2) of this Article have been fully considered. As the lot size increases beyond the one-half acre, the technical justification required for issuing the variance increases.

7. Upon consideration of the factors noted above and the intent of these regulations, the Appeal Board may attach such conditions to the granting of variances as it deems necessary to further the purpose and objectives of these regulations (Article 1, Section C).

8. Variances shall not be issued within any designated floodway if any increase in flood levels during the base flood discharge would result.

9. Variances may be issued for the repair or rehabilitation of historic structures upon a determination that the proposed repair or rehabilitation will not preclude the structure's continued designation as a historic structure and the variance is the minimum necessary to preserve the historic character and design of the structure.

10. Prerequisites for granting variances:

    a) Variances shall only be issued upon a determination that the variance is the minimum necessary, considering the flood hazard, to afford relief.

    b) Variances shall only be issued upon:

        1) Showing a good and sufficient cause;

        2) A determination that failure to grant the variance would result in exceptional hardship to the applicant, and

        3) A determination that the granting of a variance will not result in increased flood heights, additional threats to public safety, extraordinary public expense, create nuisances, cause fraud on or victimization of the public, or conflict with existing local laws, regulations or ordinances.

    c) A written notice will be provided to any person granted a variance to build a structure below the base flood elevation. This notice will inform the variance applicant that the cost of flood insurance will be commensurate with the increased risk resulting from permitting the structure to be built lower than the base flood elevation.

11. Variances may be issued by a community for new construction and substantial improvements and for other development necessary for the conduct of a functionally dependent use provided that:

    a) The criteria outlined in Article 4, Section D (1)-(9) are met, and

    b) The structure or other development is protected by methods that minimize flood damages during the base flood and create no additional threats to public safety.

12. Any person seeking a variance shall file a petition with the floodplain board, accompanied by a filing fee of Twenty-five Dollars ($25.00).

13. A copy of any variance issued shall be sent to the OWRB within in fifteen (15) days of issuance.

SECTION 12-605 PROVISIONS OF FLOOD HAZARD REDUCTION.

A. GENERAL STANDARDS. In all areas of special flood hazards the following provisions are required for all new construction and substantial improvements:

1. All new construction or substantial improvements shall be designed (or modified) and adequately anchored to prevent flotation, collapse or lateral movement of the structure resulting from hydrodynamic and hydrostatic loads, including the effects of buoyancy;

2. All new construction or substantial improvements shall be constructed by methods and practices that minimize flood damage;

3. All new construction or substantial improvements shall be constructed with materials resistant to flood damage;

4. All new construction or substantial improvements shall be constructed with electrical, heating, ventilation, plumbing, and air conditioning equipment and other service facilities that are designed and/or located so as to prevent water from entering or accumulating within the components during conditions of flooding.

5. All new and replacement water supply systems shall be designed to minimize or eliminate infiltration of flood waters into the system;

6. New and replacement sanitary sewage systems shall be designed to minimize or eliminate infiltration of flood waters into the system and discharge from the systems into flood waters; and,

7. On-site waste disposal systems shall be located to avoid impairment to them or contamination from them during flooding.

B. SPECIFIC STANDARDS. In all areas of special flood hazards as set forth in (i) Article 3, Section B, the following provisions are required:

1. Residential Construction - new construction and substantial improvement of any residential structure shall have the lowest floor (including basement), elevated two (2) feet above the base flood elevation. A registered professional engineer, architect, or land surveyor shall submit a certification to the Floodplain Administrator that the standard of this subsection as proposed in Article 4, Section C (1) a., is satisfied.

2. Nonresidential Construction - new construction and substantial improvements of any commercial, industrial or other nonresidential structure shall have the lowest floor (including basement) elevated two (2) feet above the base flood level. The Floodplain Administrator shall maintain a record of all elevation certifications that includes the specific elevation (in relation to mean sea level) to which each structure has been elevated.

3. Enclosures - new construction and substantial improvements, with fully enclosed areas below the lowest floor that are usable solely for parking of vehicles, building access or storage in an area other than a basement and which are subject

to flooding shall be designed to automatically equalize hydrostatic flood forces on exterior walls by allowing for the entry and exit of floodwaters. Designs for meeting this requirement must either be certified by a registered professional engineer or architect or meet or exceed the following minimum criteria:

a) A minimum of two openings having a total net area of not less than one square inch for every square foot of enclosed area subject to flooding shall be provided.

b) The bottom of all openings shall be no higher than one foot above grade.

c) Openings may be equipped with screens, louvers, valves, or other coverings or devices provided that they permit the automatic entry and exit of floodwaters.

4. Manufactured Homes -

a) Require that all manufactured homes to be placed within Zone A on a community's FHBM or FIRM shall be installed using methods and practices that minimize flood damage. For the purposes of this requirement, manufactured homes must have the bottom of the structural I-Beam elevated two (2) feet above the base flood elevation and anchored to resist flotation, collapse, or lateral movement. Methods of anchoring may include, but are not limited to, use of over-the-top or frame ties to ground anchors. This requirement is in addition to applicable State and local anchoring requirements for resisting wind forces.

b) Require that manufactured homes that are placed or substantially improved within Zones A1-30, AH, and AE on the community's FIRM on sites (i) outside of a manufactured home park or subdivision, (ii) in a new manufactured home park or subdivision, (iii) in an expansion to an existing manufactured home park or subdivision, or (iv) in an existing manufactured home park or subdivision on which a manufactured home has incurred "substantial damage" as a result of a flood, be set on a permanent foundation such that the bottom of the structural I-Beam is elevated to the base flood elevation and be securely anchored to an adequately anchored foundation system to resist flotation, collapse, and lateral movement.

c) Require that manufactured homes be placed or substantially improved on sites in an existing manufactured home park or subdivision with Zones A1-30, AH and AE on the community's FIRM that are not subject to the provisions of paragraph (4) of this section be elevated so that either the bottom of the structural I-Beam of the manufactured home is elevated two (2) feet above the base flood elevation.

5. Recreational Vehicles - Require that recreational vehicles placed on sites within Zones A1-30, AH, and AE on the community's FIRM either:

   a) Be on the site for fewer than 180 consecutive days,

   b) Be fully licensed and ready for highway use, or

   c) Meet the permit requirements of Article 4, Section C (1), and the elevation and anchoring requirements for "manufactured homes" in paragraph (4) of this section. A recreational vehicle is ready for highway use if it is on its wheels or jacking system, is attached to the site only by quick disconnect type utilities and security devices, and has no permanently attached additions.

6. Accessory Structure –

   a) Structure is low valued and represents a minimal investment.

   b) Structure shall be small and not exceed 600 square feet in size.

   c) Structure shall be unfinished on the interior.

   d) Structure can be used only for parking and limited storage.

   e) Structure shall not be used for human habitation (including work, sleeping, living, cooking, or restroom areas).

   f) Service facilities such as electrical and heating equipment must be elevated to or above the BFE or floodproofed.

   g) Structure is constructed and placed on building site so as to offer the minimum resistance to the flow of floodwaters.

   h) Structure is designed to have low flood damage potential i.e. constructed with flood resistance materials.

   i) Structure is firmly anchored to prevent flotation, collapse, and lateral movement.

   j) Floodway requirements must be met in the construction of the structure.

   k) Openings to relieve hydrostatic pressure during a flood shall be provided below the BFE.

   l) Structure is to be located so as not to cause damage to adjacent and nearby structures.

7. Exemptions -

The requirement for structures as described in this Article to be elevated two (2) feet above base flood elevation shall not apply to any final plats approved or any lots approved under Section 1-4A of the Piedmont Subdivision Regulations on or before September 26, 2008. All plats or lots as described in the previous sentence approved before that date shall meet the previous requirement of the one (1) foot above base flood elevation.

C. STANDARDS FOR THE SBUDIVISION PROPOSALS.

1. All subdivision proposals including the placement of manufactured home parks and subdivisions shall be consistent with Article 1, Sections B, C and D of these regulations.

2. All proposals for the development of subdivisions including the placement of manufactured home parks and subdivisions shall meet Development Permit requirements of Article 3, Section C; Article 4, Section C; and the provisions of Article 5 of these regulations.

3. Base flood elevation data shall be generated for subdivision proposals and other proposed development including the placement of manufactured home parks and subdivisions which is greater than 50 lots or 5 acres, whichever is lesser, if not otherwise provided pursuant to Article 3, Section B or Article 4, Section B (8) of these regulations.

4. All subdivision proposals including the placement of manufactured home parks and subdivisions shall have adequate drainage provided to reduce exposure to flood hazards.

5. All subdivision proposals including the placement of manufactured home parks and subdivisions shall have public utilities and facilities such as sewer, gas, electrical and water systems located and constructed to minimize or eliminate flood damage.

D. STANDARDS FOR AREAS OF SHALLOW FLOODING (AO/AH ZONES). Located within the areas of special flood hazard established in Article 3, Section B, are areas designated as shallow flooding. These areas have special flood hazards associated with base flood depths of 1 to 3 feet where a clearly defined channel does not exist and where the path of flooding is unpredictable and where velocity flows may be evident. Such flooding is characterized by ponding or sheet flow; therefore, the following provisions apply:

1. All new construction and substantial improvements of residential structures have the lowest floor (including basement) elevated above the highest adjacent grade at

2. least as high as the depth number specified in feet on the community's FIRM (at least two feet if no depth number is specified).

3. All new construction and substantial improvements of non-residential structures;

   a) Have the lowest floor (including basement) elevated above the highest adjacent grade at least as high as the depth number specified in feet on the community's FIRM (at least two feet if no depth number is specified), or;

   b) Together with attendant utility and sanitary facilities be designed so that below the base flood level the structure is watertight with walls substantially impermeable to the passage of water and with structural components having the capability of resisting hydrostatic and hydrodynamic loads of effects of buoyancy.

4. A registered professional engineer or architect shall submit a certification to the Floodplain Administrator that the standards of this Section, as proposed in Article 4, Section C (1) a., are satisfied.

5. Require within Zones AH or AO adequate drainage paths around structures on slopes, to guide floodwaters around and away from proposed structures.

E. FLOODWAYS. Floodways - located within areas of special flood hazard established in Article 3, Section B, are areas designated as floodways. Since the floodway is an extremely hazardous area due to the velocity of floodwaters that carry debris, potential projectiles and erosion potential, the following provisions shall apply:

1. Encroachments are prohibited, including fill, new construction, substantial improvements and other development within the adopted regulatory floodway *unless* it has been demonstrated through hydrologic and hydraulic analyses performed in accordance with standard engineering practice that the proposed encroachment would not result in any increase in flood levels within the community during the occurrence of the base flood discharge.

2. If Article 5, Section E (1) above is satisfied, all new construction and substantial improvements shall comply with all applicable flood hazard reduction provisions of Article 5.

3. Under the provisions of 44 CFR Chapter 1, Section 65.12, of the National Flood Insurance Regulations, a community may permit encroachments within the adopted regulatory floodway that would result in an increase in base flood elevations, provided that the community first completes all of the provisions required by Section 65.12.

F. SEVERABILITY. If any section, clause, sentence, or phrase of these Regulations is held to be invalid or unconstitutional by any court of competent jurisdiction, then said holding shall in no way affect the validity of the remaining portions of these Regulations.

G. PENALTIES FOR NONCOMPLIANCE. No structure or land shall hereafter be constructed, located, extended, converted, or altered without full compliance with the terms of this ordinance and other applicable regulations. Violation of the provisions of this ordinance by failure to comply with any of its requirements (including violations of conditions and safeguards established in connection with conditions) shall constitute a misdemeanor. Any person who violates this ordinance or fails to comply with any of its requirements shall upon conviction thereof be fined not more than $ 500.00 or imprisoned for not more than sixty days, or both, for each violation, and in addition shall pay all costs and expenses involved in the case. Nothing herein contained shall prevent the City of Piedmont Floodplain Board, Piedmont City Council, or City Attorney from taking such other lawful action as is necessary to prevent or remedy any violation.

H. CERTIFICATION. It is hereby found and declared by The City of Piedmont Floodplain Board that severe flooding has occurred in the past within its jurisdiction and will certainly occur within the future; that flooding is likely to result in infliction of serious personal injury or death, and is likely to result in substantial injury or destruction of property within its jurisdiction; in order to effectively comply with minimum standards for coverage under the National Flood Insurance Program; and in order to effectively remedy the situation described herein, it is necessary that these regulations become effective immediately.

(This page intentionally left blank)

PART 13

PUBLIC SAFETY

CHAPTER 1

FIRE SERVICES

ARTICLE A

FIRE DEPARTMENT

Section 13-101	Fire department.
Section 13-102	Combination fire department.
Section 13-103.	Fire chief.
Section 13-104.	Duties of the assistant chief.
Section 13-105.	Company officers.
Section 13-106.	Secretary-treasurer.
Section 13-107.	Membership, new members.
Section 13-108.	Bylaws.
Section 13-109.	Rules and regulations.
Section 13-110.	Badges.
Section 13-111.	Use of fire equipment.
Section 13-112.	Authority of firefighters at fires.
Section 13-113.	Right of entry.

ARTICLE B
CALLS OUTSIDE LIMITS

Section 13-121.	Power to contract.
Section 13-122.	Contracts for service.
Section 13-123.	Authority to answer calls.
Section 13-124.	Charges for calls made outside city.
Section 13-125.	Firefighters serving in regular line of duty.
Section 13-126.	Department considered agent of state.

CHAPTER 2

POLICE SERVICES

Section 13-201	Police Department created; chief.
Section 13-202	Duties.

CHAPTER 3

EMERGENCY MANAGEMENT

Section 13-301	Purpose of chapter.
Section 13-302	Agency.
Section 13-303	Responsibilities and duties of Director, Deputies.
Section 13-304	Duty and responsibility of Mayor in the event of an emergency.
Section 13-305	Emergency powers of Emergency Management Agency.

CHAPTER 4

ALARM SYSTEMS

Section 13-401	Definitions.
Section 13-402	Purposes.
Section 13-403	Alarm user permit required.
Section 13-404	Disconnection of faulty or defective alarms.
Section 13-405	False alarms, user fee and permit revocation.
Section 13-406	Automatic dialing devices, enhanced 911 system connections prohibited.
Section 13-407	Immediate disconnection or reprogramming of illegal devices required.
Section 13-408	Enforcement and penalties.
Section 13-409	Cumulative remedies.

CHAPTER 1

ARTICLE A
FIRE DEPARTMENT

Section 13-101. Fire department.
Section 13-102. Combination fire department.
Section 13-103. Fire chief.
Section 13-104. Duties of the assistant chief.
Section 13-105. Company officers.
Section 13-106. Secretary-treasurer.
Section 13-107. Membership, new members.
Section 13-108. Bylaws.
Section 13-109. Rules and regulations.
Section 13-110. Badges.
Section 13-111. Use of fire equipment.
Section 13-112. Authority of firefighters at fires.
Section 13-113. Right of entry.

ARTICLE B
CALLS OUTSIDE LIMITS

Section 13-121. Power to contract.
Section 13-122. Contracts for service.
Section 13-123. Authority to answer calls.
Section 13-124. Charges for calls made outside city.
Section 13-125. Firefighters serving in regular line of duty.
Section 13-126. Department considered agent of state.

ARTICLE A
FIRE DEPARTMENT

SECTION 13-101. FIRE DEPARTMENT.

A. There is a fire department of the City, the head of which is the Chief of the fire department.

B. It is the duty of the fire department, among others, to extinguish fires; to rescue persons endangered by fire; to resuscitate, and to administer first aid to, persons injured in or about burning structures, or elsewhere in case of an emergency; to promote fire prevention; and unless otherwise provided, to enforce all ordinances relating to fires, fire prevention, and safety of persons from fire in public and private buildings. (Prior Code, Sec. 1-28, in part).

Cross Reference: See also city fire code, Section 5-601 of this code; fireworks regulations, Section 10-324 of this code.

SECTION 13-102. COMBINATION FIRE DEPARTMENT.

A. The fire department of the City is a combination fire department as hereinafter defined and regulated. For purposes of this Section the following definitions shall apply:

1. Combination fire department" means a fire department which has in its employ more than two full-time salaried firefighters and at least one but not more than twenty-five volunteer firefighters; and

2. Volunteer firefighter of a combination fire department" means a person who is enrolled as a volunteer member of a combination fire department and who serves in such capacity without receiving a regular salary. The person, who is a salaried employee of a municipality, shall not serve as a volunteer firefighter of a combination fire department if such service as a volunteer firefighter is a condition of employment with the municipality. A person, who is a salaried public safety employee of a municipality, shall not serve as a volunteer firefighter of a combination fire department unless the person is off duty and such service is not a condition of employment.

3. For the purposes of this subsection, a public safety employee is a person employed to serve as a salaried firefighter, police or other law enforcement officer or emergency medical technician.

B. Volunteer firefighters of the combination fire department shall:

1. Be required, when notified, to respond to alarms of fire and other emergencies;

2. Be required to be present at all regular meetings, call meetings and schools presented for the benefit of the firefighters;

3. Be dropped from a fire department's rolls if such volunteer firefighter has two unexcused absences in succession or three unexcused absences in a period of three (3) months;

4. Notify the chief if such volunteer firefighter is leaving the municipality for an extended period of time;

5. Be expelled from the rolls if such volunteer firefighter refuses to attend training classes provided for him or her;

6. Be expelled from the rolls for the following offenses:

a. conduct unbecoming of a firefighter;
b. any act of insubordination;
c. neglect of duty;
d. any violation of rules and regulations governing the fire department; or
e. conviction of a felony; and

7. Reside in the same county as the combination fire department he or she is enrolled in or in a county that immediately borders the county in which the combination fire department is located.

SECTION 13-103. FIRE CHIEF.

The Chief shall be the administrative head of the department, subject to the laws of the state, ordinances of the City, and the rules and regulations adopted in this chapter. The Chief shall have the following powers and duties, and he may assign duties to other members of the department:

1. The Chief shall be responsible for the general condition and efficient operation of the department, the training of members, and the performance of all other duties imposed upon him. He shall have supervision and control of the fire department, subject to the supervision and control of the City Administrator.

2. The Chief may inspect or cause to be inspected by members of the department the fire hydrants, cisterns, and other sources of water supply at least twice each year.

3. The Chief may maintain a library or file of publications on fire prevention and fire protection, and shall make use of it to the best advantage of all members.

4. The Chief shall make every effort to attend all fires and direct the officers and members in the performance of their duties.

5. The Chief shall see that the citizens are kept informed on fire hazards in the community and on the activities of the department.

6. The Chief shall see that each fire is carefully investigated to determine its cause; and in the case of suspicion of incendiarism or arson, shall notify proper authorities and secure the preservation of all possible evidence for future use in the case.

7. The Chief is authorized to enter any building or premises in the City at any reasonable hour for the purpose of making inspections and to serve written notice on persons for any violations that may be found.

8. The Chief shall see that complete records are kept of all fires, inspections, and apparatus and equipment, personnel, and other information of the department, and shall make reports to the City Administrator as he may require. The Chief shall keep the City informed regarding the fire department and its needs. (Prior Code, Secs. 1-18, 1-27, 1-30, 1-34 to 1-36 in part.)

SECTION 13-104 DUTIES OF THE ASSISTANT CHIEF.

In the absence of the chief, the assistant chief on duty shall command the department and be held responsible therefor in all respects with the full powers and responsibilities of the chief. The assistant chief shall be appointed by the chief, with approval of the city administrator. (Prior Code, Sec. 1-19)

SECTION 13-105 COMPANY OFFICERS.

Company officers shall be selected by the chief based on the following criteria:

1. Knowledge of fire firefighting;

2. Leadership ability; and

3. Knowledge of firefighting equipment.

(Prior Code, Sec. 1-20)

SECTION 13-106 SECRETARY TREASURER.

One member elected by the members of the fire department, subject to approval of the chief, shall be a secretary-treasurer. His duties shall consist of the following:

1. Calling the roll at the opening of each meeting;

2. Keeping the minutes of each meeting; and

3. Collecting any money due the department by the members.

(Prior Code, Sec. 1-21)

SECTION 13-107 MEMBERSHIP, NEW MEMBERS.

A. Membership of the department shall consist of such persons as may be appointed by the chief and shall be persons residing within the city. Determination of whether candidates for appointment are capable of performing their duties shall be made by the chief after a medical and physical examination has been made in a manner prescribed by the chief and approved by the city administrator.

B. New members of the department shall be appointed by the chief and shall be on probation for one year after their appointment. Upon completion of their probation period, new members must be approved by the chief and the city administrator. (Prior Code, Sec. 1-24).

SECTION 13-108 BYLAWS.

The bylaws of the department shall include the following:

1. All volunteer fire department members are required, when notified, to respond to alarms of fire and other emergencies;

2. A member is required to be present at all regular meetings, called meetings and schools presented for the benefit of the firefighters;

3. At least one regular business meeting of the members shall be held each month;

4. Any member having two (2) unexcused absences in succession or three (3) unexcused absences in a period of three (3) months will be dropped from the fire department rolls;

5. Any member leaving the city for an extended period of time is required to notify the chief;

6. Any member refusing to attend training classes provided for members of the department will be dropped;

7. Any member of the fire department may be dropped from the rolls for the following offenses:

a. Conduct unbecoming a firefighter;

b. Any act of insubordination;

c. Neglect of duty;

d. Any violation of rules and regulations governing the fire department; or

e. Conviction of a felony.

(Prior Code, Sec.1-25, in part)

SECTION 13-109 RULES AND REGULATIONS.

The city council, by motion or resolution, may adopt and change regulations relating to the fire department, its organization, operation and compensation. (Prior Code, Sec. 1-29)

SECTION 13-110 BADGES.

Each member of the department is authorized to wear a badge designating his name and rank. (Prior Code, Sec.1-26)

SECTION 13-111 USE OF FIRE EQUIPMENT.

A. The department shall be equipped with such apparatus and other equipment as maybe required from time to time to maintain its efficiency and properly protect life and property from fire.

B. Recommendations of apparatus and equipment needed shall be made by the chief, purchased after approval as other city purchases.

C. All equipment of the department shall be safely and conveniently housed in such places as may be designated by the city administrator.

D. Suitable arrangements and equipment shall be provided for people to turn in alarms and to notify members of the department so that they may promptly respond.

E. No person shall use any fire apparatus or equipment for any private purpose, nor shall any person wilfully and without proper authority take away or conceal any article used in any way by the department. No person shall enter any place where fire apparatus is housed or handle any apparatus or equipment belonging to the department unless accompanied by, or having the special permission of, an officer or authorized member of the department. (Prior Code, Sec. 1-33, 1-38)

SECTION 13-112 AUTHORITY OF FIREFIGHTERS AT FIRES.

The fire chief, assistant fire chiefs or other fire department officers in charge shall have complete charge and control at all fires. Fire orders shall be obeyed. The chief or his officers may prescribe limits in the vicinity of a fire which no persons except those residing or owning property therein shall be permitted to enter except on the order of the officer in command. Police officers may aid in carrying into effect the provisions of this section. (Prior Code, Sec. 1-37, in part)

SECTION 13-113 RIGHT OF ENTRY.

The chief of the fire department and his designee may at all reasonable hours entry any building or premises within his jurisdiction for the purpose of making any inspection or investigation which, under the provisions of this chapter and other provisions of this code, he may deem necessary to make. (Prior Code, Sec. 1-31)

ARTICLE B

CALLS OUTSIDE LIMITS

SECTION 13-121 POWER TO CONTRACT.

The city is hereby authorized and empowered to enter into contracts or agreements with individuals, firms, private corporations or associations, or military installations or commands, or political subdivisions of the state for fire protection outside the corporate limits of the city, and to contract to provide fire protection jointly with other organizations and municipal subdivisions of the state.

State Law Reference: Fire services outside city, city powers, 11 O.S. Secs. 29-105 et seq.

SECTION 13-122 CONTRACTS FOR SERVICE.

Any contract entered into by the city, with an individual owner, a firm, private corporation, association or political subdivision, for outside aid or mutual aid for fire protection, shall provide for the payment by the owner, firm, private corporation, association or political subdivision for such service, equipment or personnel in an amount reached through negotiation by the parties.

SECTION 13-123 AUTHORITY TO ANSWER CALLS.

The fire department is authorized to answer all calls outside the city within a reasonable

distance of the city limits if first approved by the fire chief on duty. The fire chief shall determine that the equipment and personnel to be dispatched for such calls are not needed for other purposes within the city.

SECTION 13-124 CHARGES FOR CALLS MADE OUTSIDE CITY.

The city may enter into a contract with persons, organizations or associations to provide fire protection service outside the city limits. Such contracts shall be conditioned upon the determination of the fire chief that the property in question is within a reasonable distance from the city and that prior to any fire protection equipment being dispatched for any fire call for such property, the fire chief on duty shall first approve such call and determine that the equipment and personnel to be dispatched are not needed for other purposes within the city. The charges for such calls shall be as specified in the fee schedule.

SECTION 13-125 FIREFIGHTERS SERVING IN REGULAR LINE OF DUTY.

All firefighters attending and serving at fires or doing fire prevention work outside the corporate limits of the city, as herein provided, shall be considered as serving in their regular line of duty as fully as if they were serving within the corporate limits of the city. The firefighters shall be entitled to all the benefits of any fire pension and relief fund in the same manner as if the firefighting or fire prevention work was being done within the corporate limits of the city.

SECTION 13-126 DEPARTMENT CONSIDERED AGENT OF STATE.

The fire department when answering any fire alarm or call or performing any fire prevention services outside the corporate limits of the city shall be considered as an agent of the state, and acting solely and alone in a governmental capacity, and the city shall not be liable in damages for any act of commission, omission or negligence while answering or returning from any fire, or reported fire, or doing any fire prevention work under and by virtue of this article.

CHAPTER 2

POLICE SERVICES

Section 13-201 Police department created; chief.
Section 13-202 Duties.

SECTION 13-201 POLICE DEPARTMENT CREATED; CHIEF.[1]

There shall be a police department, the head of which is the chief of police, or the police chief. (Prior Code, Sec. 1-13)

Cross Reference: See also Section 7-801 et seq on unclaimed or abandoned property held by the police.

SECTION 13-202 DUTIES.

It is the duty of the police department to apprehend and arrest on view or on warrant and bring to justice violators of the ordinances of the city; to suppress all riots, affrays and unlawful assemblies which may come to their knowledge, and generally to keep the peace; to serve warrants, writs, executions and other processes properly directed and delivered to them; to apprehend and arrest persons violating state laws as provided by law, and to turn them over to proper authorities; and in all respects to perform all duties pertaining to the offices of police officers. (Prior Code, Section 1-14, in part)

CHAPTER 3

EMERGENCY MANAGEMENT

Section 13-301	Purpose of chapter.
Section 13-302	Agency.
Section 13-303	Responsibilities and duties of Director, Deputies:
Section 13-304	Duty and responsibility of Mayor in the event of an emergency.
Section 13-305	Emergency powers of Emergency Management Agency.

SECTION 13-301 PURPOSE OF CHAPTER.

The purpose of this Chapter is to create an emergency management organization for the City to be prepared for, and to function in the event of emergencies endangering the lives and property of the people of the City. The duty of such emergency management organization shall be to the protection of the lives and health of the citizens of the City, and the property and property rights, both private and public, and to perform all functions necessary and incident thereto.

SECTION 13-302 AGENCY.

The purpose of the Emergency Management Agency (hereinafter "Agency") is to prepare for, and function in the event of emergencies endangering the lives and property of the citizens of the City. The Agency is headed by a Director appointed by the City Manager for such compensation and under such terms as the City Manager may establish. The Director serves at the pleasure of the City Manager.

SECTION 13-303 RESPONSIBILITIES AND DUTIES OF DIRECTOR, DEPUTIES.

A. The Director of the Agency shall be the administrative head of the Agency and shall be responsible for carrying out the emergency management program of the City in coordination with the Emergency Services Direction and Control Group. He shall have such further duties and responsibilities to cooperate with all emergency services and emergency management agencies of other governmental units, including the State and Federal governments.

B. The City Manager, or the Director when empowered by the City Manager, may designate some person as Deputy Director or Assistant Director, and shall prescribe the

duties of the Deputy or Assistant, from time to time, as necessary for the carrying out of the emergency management program of the City. The Deputy Director shall perform all duties of the director upon the death, disability, illness, or separation from service of the Director. In addition to the foregoing duties the Deputy or Assistant shall render such aid and assistance and perform such duties under the emergency management program of the City as may be required by the Director."

SECTION 13-304 DUTY AND RESPONSIBILITY OF MAYOR IN THE EVENT OF AN EMERGENCY.

A. The Mayor is hereby authorized to declare an emergency and the Mayor shall make reasonable attempts to notify the City Manager and Emergency Management Director. In the absence of the Mayor or inability of the Mayor to act the duties of the Mayor shall be performed by the Mayor pro-tem. In the event both of these officials are unavailable to act, then the City Manager may declare an emergency. An emergency is defined as a natural or other catastrophe which endangers the lives, property, health, safety, or welfare of the inhabitants of Piedmont.

B. The Mayor shall be the City spokesman for public relations and media contacts.

SECTION 13-305 EMERGENCY POWERS OF EMERGENCY MANAGEMENT AGENCY.

A. In the event of an enemy-caused emergency or emergency resulting from natural causes, the Director, after due authorization from the Mayor, shall have the power and authority to enforce all rules and regulations relating to emergency management; and, if necessary, to take control of transportation, communications, stocks of fuel, food, clothing, medicine, and public utilities for the purpose of protecting the civilian population. He shall cooperate in every way with other governmental agencies and emergency management services organizations. He shall have authority to activate the emergency operations center; and upon activation, he will be in charge of the emergency operations center through the duration of the emergency.

B. The Director, other members of the agency, and members of any emergency services, and the Emergency Management Agency established herein shall have the power and authority to enforce the laws of the State and ordinances of the City during the period of emergency, and shall at such time have the further power to make arrests for violations of such laws or ordinances.

CHAPTER 4

ALARM SYSTEMS

Section 13-401	Definitions.
Section 13-402	Purposes.
Section 13-403	Alarm user permit required.
Section 13-404	Disconnection of faulty or defective alarms.
Section 13-405	False alarms, user fee and permit revocation.
Section 13-406	Automatic dialing devices, enhanced 911 system connections prohibited.
Section 13-407	Immediate disconnection or reprogramming of illegal devices required.
Section 13-408	Enforcement and penalties.
Section 13-409	Cumulative remedies.

SECTION 13-401 DEFINITIONS.

For the purpose of this chapter, the following terms shall have the meanings respectively ascribed to them in this section unless the context clearly requires otherwise:

1. "Alarm administrator" means the department head or his designee of the department designated by the city administrator to perform the administrative functions of this chapter;

2. "Alarm system" means one or more devices designed to detect and signal unauthorized intrusion, entry, robbery, fire or other emergency condition, which signals are responded to by public law enforcement officers, fire department personnel, private security guards or security officers. This provision excludes systems installed within motor vehicles;

3. "Alarm user" means any person in control of any building, structure or facility wherein an alarm system is maintained;

4. "Audible alarm system" means an alarm system not interconnected to an alarm business or the police service communication center, but is activated by sounding a bell, siren or other device that makes an audible or visual signal at the location protected by the alarm system, indicating a need for police, fire or other emergency response;

5. "Enhanced 911 system" means an emergency phone system which is designed to receive emergency phone calls by dialing the three digit number 9-1-1. The system places the person requesting emergency service in touch with fire, police and ambulance services by dialing a single number;

6. "False alarm" means the activation of a burglary, robbery, fire or other alarm for the purpose of summoning emergency assistance or which causes the police or fire department to be summoned at a time when no emergency exists. False alarms include those caused by:

   a. Error or mistake, including any action by any person or entity or agent owning or operating any dwelling, building or place which results in the activation of any alarm system when no emergency exists;

   b. Malfunction, including any activation of any alarm system caused by a flaw in the normal operation, design, installation, maintenance of the system, faulty equipment, change in environment, or premises upon or within which

the alarm system is operating;

c. Intentional misuse, including any intentional activation of an alarm system when no burglary, robbery, vandalism, fire or other emergency is in progress. This subparagraph does not apply to testing during installation and regular maintenance when the user notifies the police service in advance and receives permission for the test.

An alarm is not considered a false alarm if it is determined that the alarm was the result of:

a. Natural or man-made catastrophe, or an act of God. Such events include tornadoes, floods or other similarly violent conditions;

b. Vandalism causing physical damage to a premises;

c. Attempted entry of a location causing visible physical or other evidence of damage to the location;

d. Severe weather causing physical damage to the premises; or

e. When the alarm user calls the police service and cancels the alarm before the police respond by using his personal identification number as registered with the alarm administrator;

7. "Fire alarm system" means any assembly of equipment,mechanical or electrical, arranged to signal the occurrence of fire or other activity requiring urgent attention, and to which the fire department personnel are expected to respond. This provision excludes alarm systems installed within motor vehicles;

8. "Interconnect" means to connect an alarm system including an automatic dialing device to a telephone line, either directly or through a mechanical device that utilizes a telephone,for the purpose of using the telephone line to transmit a message upon the activation of the alarm system;

9. "Telephone dialing device" means a device which is interconnected to a telephone line and is programmed to select a predetermined telephone number and transmit by voice message or code signal an emergency message indicating a need for police, fire or medical response;

10. "User fee" means the amount assessed to alarm users for false alarm responses in excess of the maximum number allowed in any one calendar year. The fee is on a per response basis for false alarms.

(Ord. No. 276, 1/23/89; Ord. No. 277, 4/24/89)

SECTION 13-402 PURPOSE.

The purpose of this chapter is to enhance and protect the emergency services of the city. The provisions of this chapter apply only to systems located in the city. (Ord. No. 277, 4/24/89)

SECTION 13-403 ALARM USER PERMITS REQUIRED.

A. Every alarm user shall obtain an alarm user's permit for each alarm system from the city alarm administrator prior to the use of the alarm and upon the effective date of this chapter. The permit application shall include information as to the number of and type of alarms installed,alarm company providing the service, monitoring agent, and numbers to be called in the event an emergency should occur.

B. Permits are also required for audible alarms and alarms with automatic dialing devices attached. This provision does not pertain to alarm systems installed within motor vehicles.

C. Each approved application and permit shall bear the signature of the alarm administrator.

D. The alarm administrator may issue registration decals to alarm users obtaining permits under this chapter.

E. Every alarm user may display all permit stickers on the front entrance of his facility so that it will be available for inspection anytime night or day.

F. If the city police or fire department receives a request for assistance from an unregistered alarm system, a fee as set by the city will be assessed against the alarm user. (Ord. No. 277, 4/24/89)

SECTION 13-404 DISCONNECTION OF FAULTY OR DEFECTIVE ALARM.

An alarm user is required upon notice from the alarm administrator to disconnect any alarm system which is faulty or defective in design or operation. An alarm system shall not be reconnected until proof of repair is furnished to the alarm administrator. (Ord. No. 277, 4/24/89)

SECTION 13-405 FALSE ALARMS, USER FEE AND PERMIT REVOCATION.

A. When records indicate ten (10) false alarms within one calendar year, the alarm administrator shall notify the alarm user by mail of the number of false alarms on record.The alarm user will also be notified that for the remainder of the calendar year responses to false alarms as defined will result in the alarm user being assessed a fee per response. If the amount billed the alarm user for emergency responses to false alarms is not paid within thirty (30) days of the statement date, the alarm administrator may revoke the alarm user's permit.

B. If the alarm user's permit has been revoked, the alarm user will be required to make application for a new permit. No alarm permit will be issued to an individual or business who owes fees to the city resulting from false alarm assessments. It is a violation of this chapter to operate an alarm system when the permit for that system has been revoked by the alarm administrator, or to operate an alarm system without a permit as required by this chapter.

C. If the alarm user's permit is revoked, the alarm user may appeal the revocation to the city administrator, provided the appeal is made in writing to the city administrator within ten (10) calendar days from the date of revocation. (Ord. No. 277, 4/24/89)

SECTION 13-406 AUTOMATIC DIALING DEVICE, ENHANCED 911 SYSTEM CONNECTIONS PROHIBITED.

It is unlawful for any person to program an automatic dialing device to any telephone line which, when activated, dials the digits 9-1-1. It is unlawful for an alarm user to fail to disconnect or reprogram an automatic dialing deice which is programmed to dial the digits 9-1-1. (Ord. No. 276, 1/23/89)

SECTION 13-407 IMMEDIATE DISCONNECTION OR REPROGRAMMING OF ILLEGAL DEVICES REQUIRED.

Any alarm user having an alarm system connected to the phone lines which is programmed to dial the digits 9-1-1 shall immediately disconnect or reprogram his telephone dialing device. (Ord. No. 276, 1/23/89)

SECTION 13-408 ENFORCEMENT AND PENALTIES.

A. Enforcement of this chapter shall be by the police and fire chiefs, the alarm administrator, the code enforcement officer, or their designees.

B. Any violation of this chapter shall be punishable as provided in Section 1-108 of this code. Each day a violation continues shall be a separate offense. (Ord. No. 276, 1/23/89; Ord. No. 277, 4/24/89)

SECTION 13-409 CUMULATIVE REMEDIES.

A. In addition to the penalties provided for in this chapter,the alarm administrator may take appropriate legal action to require the disconnection of any alarm system operated in violation of this chapter, including but not limited to disconnection of the alarm system seeking injunctive relief in the district court.

B. If an alarm system is in violation of Section 13-406 of this code, the city attorney and alarm administrator are hereby authorized to take appropriate legal action to cause the alarm system to be disconnected, phone service discontinued or other immediate action to prevent he alarm system from dialing 9-1-1. The city attorney is authorized to seek injunctive relief in district court, if necessary, to accomplish the disconnection. The remedies provided for in this section shall be cumulative to the criminal penalties provided for in this chapter. (Ord. No. 276, 1/23/89; Ord. No. 277, 4/24/89)

PART 14

STREETS AND SIDEWALKS

CHAPTER 1

GENERAL PROVISIONS

Section 14-101	Obstructions generally.
Section 14-102	Interfering with street, free flow of traffic.
Section 14-103	Removal of trees, shrubs, obstructing view of traffic.
Section 14-104	Display of sale of goods, wares and merchandise.
Section 14-105	No structures on or over streets and sidewalks.
Section 14-106	Playing prohibited.
Section 14-107	Unlawful to injure trees, shrubbery.
Section 14-108	Signs obstructing view, in sight triangle, prohibited.
Section 14-109	Duties of owners and occupants of adjacent property relative to sidewalk obstructions, hazards.
Section 14-110	Signs in right of way, other locations, prohibited; permitted times for posting political signs on private property.
Section 14-111	Penalty.

CHAPTER 2

CURB AND STREET CUTS

ARTICLE A

STREET CUTS

Section 14-201	Unlawful to cut without permit.
Section 14-202	Permit.
Section 14-203	Fee.
Section 14-204	Notification of completion of work.
Section 14-205	No delays.

ARTICLE B

CURB CUTS

Section 14-211	Permit for curb cuts.
Section 14-212	Fee.
Section 14-213	Inspection.
Section 14-214	Penalty.

CHAPTER 3

STREET CONSTRUCTION STANDARTS

Section 14-301	Compliance.
Section 14-302	Permit required.
Section 14-303	General Specifications for street construction.
Section 14-304	Roadbed preparation.
Section 14-305	Base course.
Section 14-306	Pavement.
Section 14-307	Street width.
Section 14-308	Curbs and gutters.
Section 14-309	Driveways.
Section 14-310	Requirements for developers or paving contractors.
Section 14-311	City maintenance or improvement of existing streets.

CHAPTER 4

REVOCABLE PERMIT FOR PARKING ON UNUSED PUBLIC RIGHT-OF-WAYS

Section 14-401	Revocable permit for parking on unused public right-of-ways.

CHAPTER 5

SIDEWALKS

ARTICLE A. PERMITS.

Section 14-501	Permit Required.
Section 14-502	Application for permit.
Section 14-503	Fee.
Section 14-504	Submission of plans.
Section 14-505	Expiration, invalid permits, fee for commencing work without permit.
Section 14-507	-
Section 14-509	Reserved.

ARTICLE B. ENFORCEMENT

Section 14-510	Enforcement.
Section 14-511	Violations.
Section 14-512	-
Section 14-519	Reserved

ARTICLE C. SIDEWALK CONSTRUCTION STANDARTS.

Section 14-520	Sidewalk construction standards.
Section 14-521	Maintenance of sidewalk and sidewalk area.

CHAPTER 1

GENERAL PROVISIONS

Section 14-101	Obstructions generally.
Section 14-102	Interfering with street, free flow of traffic.
Section 14-103	Removal of trees, shrubs, obstructing view of traffic.
Section 14-104	Display of sale of goods, wares and merchandise.
Section 14-105	No structures on or over streets and sidewalks.
Section 14-106	Playing prohibited.
Section 14-107	Unlawful to injure trees, shrubbery.
Section 14-108	Signs obstructing view, in sight triangle, prohibited.
Section 14-109	Duties of owners and occupants of adjacent property relative to sidewalk obstructions, hazards.
Section 14-110	Signs in right of way, other locations, prohibited; permitted times for posting political signs on private property.
Section 14-111	Penalty.

SECTION 14-101 OBSTRUCTIONS GENERALLY.

It is unlawful for any person to obstruct in any manner any street, alley, sidewalk or other public way by leaving or permitting to remain thereon or therein any vehicle, object, material, structure, fence or other obstruction of any kind. (Prior Code, Sec. 19-4)

SECTION 14-102 INTERFERING WITH STREET, FREE FLOW OF TRAFFIC.

A. It is unlawful to:

1. Obstruct any public street, public highway, public sidewalk or any other public place or building by hindering or impeding or tending to hinder or impede the free and uninterrupted passage of vehicles, traffic or pedestrians; or

2. Commit in or upon any public street, public highway, public sidewalk or any other public place or building any act or thing which is an obstruction or interference to the free and uninterrupted use of property or with any business lawfully conducted by anyone in or upon or facing or fronting on any such public street, public highway, public sidewalk or any other public place or building, all of which prevents the free and uninterrupted ingress, egress, and regress, therein, thereon and thereto.

B. When any person causes or commits any of the conditions enumerated in Subsection A herein, a police officer or any law enforcement officer shall order that person to stop causing or committing such conditions and to move on or disburse, or to remove any obstructions. Any person who fails or refuses to obey such orders shall be guilty of a violation of this section.

SECTION 14-103 REMOVAL OF TREES, SHRUBS, OBSTRUCTING VIEW OF TRAFFIC.

A. The owner of every lot or parcel of land in the city upon which any trees, shrubs or plants are growing, or upon which any obstruction has been placed, shall remove such trees, shrubs, plants or obstruction, or parts thereof, if they are so situated as to constitute a traffic hazard by obstructing the view of any driver of any vehicle on the streets of the city to the extent that the driver is unable to observe the approach of other vehicles on streets and alleys and at

intersections.

B. The owner of any premises abutting on any street shall trim all trees and shrubbery growing in the parking, between the sidewalks and the roadway, of any such street, and all trees and shrubbery growing on any part of the premises adjacent to the sidewalks or any street or alley in such manner that the boughs or limbs thereof shall not obstruct free and convenient passage, sight and travel along the streets, sidewalks and alleys. If premises are occupied by some person other than the owner, such occupant shall trim the trees and shrubbery in the same manner as hereinbefore required of the owner. Such trees and shrubbery shall be trimmed so that the lowest branches or foliage shall not be lower than ten (10) feet above the roadway of a street or alley, nor lower than eight (8) feet above the sidewalk.

C. Any owner or occupant who fails, refuses or neglects to trim trees and shrubbery as provided in this section, after receiving five (5) days' notice from the city manager or his designee to do so, is guilty of an offense against the city. In addition to any fine or punishment as an offense, the city may act to abate the nuisance. Every day that the owner or occupant fails, refuses or neglects to trim such trees or shrubbery after the expiration of the five (5) days' notice shall be a separate offense. (Prior Code, Secs. 19-1, 19-2)

Cross Reference: General procedure for abatement of nuisances caused by weeds or grass constituting a traffic hazard, see Part 8 of this code.

SECTION 14-104 DISPLAY OF SALE OF GOODS, WARES AND MERCHANDISE.

A. Except as otherwise provided in this code, it is unlawful for any person to display any goods, wares or merchandise for sale, or to sell the same, on any street, alley or sidewalk, or from any vehicle parked thereon, in the corporate limits of the city. Each separate sale or offer to sell in violation hereof shall constitute a separate offense.

B. Any vehicle parked on the streets, alleys or sidewalks for the purpose of making merchandise available for sale by the methods prohibited by this section shall be promptly moved by the driver upon order of the police of the city, and if not promptly moved, the same shall be towed from such location upon order of the police department, and the driver or custodian of the vehicle shall also be deemed guilty of an offense.

C. In each instance where an individual is guilty of an offense under the provisions of this section, the person for whom such individual is acting in the capacity of an agent or employee shall be guilty of a separate offense.

SECTION 14-105 NO STRUCTURES ON OR OVER STREETS AND SIDEWALKS.

A. It is unlawful for any person to erect or construct, or cause to be erected or constructed, any cellar or basement way, stairway, door, awning post, canopy or any other kind of structure projecting into, upon or over, and adjoining any street or sidewalk within the city, except that the building official may, in his discretion, authorize the same to be done, where the public health, safety and necessity demand, by granting a permit therefor.

B. Upon the granting of a permit under this section, conditions as to the erection of the structure through, upon or over any street or sidewalk may be fixed by the city administrator, and a contract shall be entered into as to the maintenance of the structure and as indemnifying agreement secured, indemnifying and saving the city harmless from any loss, costs or damage by

reason of the structure projecting into, upon or over, and adjoining any street or sidewalk within the fire limits of the city.

SECTION 14-106 PLAYING PROHIBITED.

It is unlawful for any person to engage in any sport, game, amusement or to play in, on or across the main-travelled portion of any sidewalk, street, avenue or alley of the city except as may be authorized by ordinance. (Prior Code, Sec. 19-8)

Cross Reference: Play streets authorized, see Section 15-527 of this code.

SECTION 14-107 UNLAWFUL TO INJURE TREES, SHRUBBERY.

It is unlawful for any person to injure any tree or shrubbery on a street or alley in the city. This section shall not prohibit the lawful and proper care and removal of such trees and shrubbery. (Prior Code, Sec. 19-3)

SECTION 14-108 SIGNS OBSTRUCTING VIEW, IN SIGHT TRIANGLE, PROHIBITED.

A. It is unlawful for any person to otherwise place any object, vehicle or structure on or so near to any street right-of-way such that same constitutes a traffic or safety hazard for either pedestrians or vehicular traffic traveling on or onto the street.

B. It is unlawful and an offense for any person to erect, construct, locate, maintain or allow to remain on his property any sign, fence or structure within an area known as the sight triangle, which is defined as that area formed by measuring from the point of intersection of two(2) lot lines a distance of twenty-five (25) feet along each lot line and connecting the points so established to create a triangle with sides abutting street right-of-way. Any sign, fence or structure placed or located in the area is hereby determined to be a public nuisance, and the city administrator is authorized to cause the structure, fence or sign to be removed. (Prior Code, Secs. 19-5.1, 19-5.2)

SECTION 14-109 DUTIES OF OWNERS AND OCCUPANTS OF ADJACENT PROPERTY RELATIVE TO SIDEWALK OBSTRUCTIONS, HAZARDS.

A. It is unlawful for any person to allow any obstruction of any kind to accumulate in the sidewalk in front of his premises. All owners and occupants of property are required to keep their premises and the sidewalks, gutters, streets and alleys adjacent thereto free from weeds, trash and all obstructions and to remove such weeds, trash and obstructions from such places.

B. It is unlawful to deposit, throw or sweep into or upon a street, alley, parking or sidewalk of the city any trash, weeds, tree trimmings, dirt or any other refuse of any kind.

C. It is unlawful for the owner or occupant of property abutting upon a sidewalk or sidewalk area to permit the sidewalk or sidewalk area adjacent to the property to become a hazard to persons using the sidewalk or sidewalk area. (Prior Code, Sec. 19-12, in part)

SECTION 14-110 SIGNS IN RIGHT OF WAY, OTHER LOCATIONS, PROHIBITED; PERMITTED TIMES FOR POSTING POLITICAL SIGNS ON PRIVATE PROPERTY.

A. For the purpose of this section:

1. "Sign" means a name, identification, image, description, display or illustration which is affixed to, painted or represented directly or indirectly upon a building, structure or piece of land and which directs attention to an object, product, place, activity, service, event, attraction, person, institution, organization or business and which is visible from any street, right of way,sidewalk, alley, park or other public property. For purposes of removal, "sign" also includes any sign structure;

2. "Political sign" means any sign concerning candidates for political office or involving a ballot issue for public election.

B. No political sign shall be erected or maintained on any street,road, highway, right of way, utility pole, fire hydrant, street sign, stop sign or other public place within the city.

C. No political sign shall be placed on private property which constitutes a hazard to pedestrians or vehicular traffic.

D. Political signs may be erected on private property not earlier than forty-five (45) days prior to an election and removed within fifteen (15) days following the election. Any political sign placed in violation of this section shall be deemed a nuisance. (Prior Code, Secs. 19-17 to 19-20)

Cross Reference: See also Section 15-209 of this code prohibiting certain signs on roadways. See also Section 5-8 of the city's zoning ordinance.

SECTION 14-111 PENALTY.

Any person who violates any provision of this chapter is guilty of an offense, and upon conviction thereof, shall be punished as provided in Section 1-108 of this code. Each day upon which a violation continues shall constitute a separate offense.

CHAPTER 2

CURB AND STREET CUTS

ARTICLE A

STREET CUTS

Section 14-201	Unlawful to cut without permit.
Section 14-202	Permit.
Section 14-203	Fee.
Section 14-204	Notification of completion of work.
Section 14-205	No delays.

ARTICLE B

CURB CUTS

Section 14-211	Permit for curb cuts.
Section 14-212	Fee.
Section 14-213	Inspection.
Section 14-214	Penalty.

ARTICLE A

STREET CUTS

SECTION 14-201 UNLAWFUL TO CUT WITHOUT PERMIT.

A. It is unlawful for any person to cut the pavement or curb in or on any of the streets, sidewalks, avenues or alleys in the city for the purpose of laying pipe or other connections for utilities, or to cut or otherwise injure the pavement or curb on any of the streets, sidewalks, avenues or alleys for any purpose whatsoever without a permit therefor as provided by this chapter.

B. No person shall open, improve, grade, surface,provide for drainage of, obstruct, alter,change, cut or otherwise interfere with any public street, avenue, alley or public way within the city without first obtaining a permit therefor from the city council which shall be granted after an application for such permit has been filed with the clerk and a hearing by the city council held thereon. (Prior Code, Sec. 19-13, as amended)

Cross Reference: See also the city paving specifications, Part 5 of this code.

SECTION 14-202 PERMIT.

A. Every person who desires to lay pipes or lines for the purpose of making and preparing any connections to utilities which will require the cutting of the pavement to make such connections shall make application for and procure from the city a written permit to cut such pavement or curb and make such installations for the proposed purpose or otherwise. No person shall have any right or authority to construct or install any pipes or lines or otherwise cut the pavement or curbs without first having secured such permit.

B. The city administrator may grant the permit required in this article after hearing and conditioned upon the applicant performing the work in a satisfactory manner and on such reasonable conditions as the administrator may impose, taking in consideration the topography of the area, the traffic congestion involved and the surfacing, drainage and other improvements necessarily required in regard thereto; and in all events the minimum standard required, shall be in accordance with street standards on file in the office of the city clerk), all of which shall be done and performed in accordance with generally accepted engineering practices. The city administrator can require curbs, gutters and drainage and a base and surface of different types of materials of a higher standard. An appeal of the administrator's ruling may be made to the city council. The appeal shall be taken by filing written notice of appeal with the city clerk within ten (10) days after the date of the administrative order. (Prior Code, Sec. 19-4, 19-14, 19-15)

Cross Reference: Building code 5-101 et seq.

SECTION 14-203 FEE.

Any person desiring to cut the pavement or other hard surface on any street or sidewalk in the city shall pay a fee for the permit. The fee shall be in such amount as set by the city council by motion or resolution. (Prior Code, Sec. 19-15, in part)

Cross Reference: See Fee Schedule, Appendix 1 of this code.

SECTION 14-204 NOTIFICATION OF COMPLETION OF WORK.

All permittees, when they have completed the work for which such cut has been made, shall notify the city of the completion of such work in order that the same may be inspected and approved.

SECTION 14-205 NO DELAYS.

Any permittee cutting pavement by virtue of a permit as authorized herein shall perform the excavation or other work without delay or interruption.

ARTICLE B

CURB CUTS

SECTION 14-211 PERMIT FOR CURB CUTS.

A. It is unlawful for any person to cut, break, tear out or remove the curbing or any part thereof along the street in the city for any purpose except in accordance with this article. Any person desiring to cut any curbing in the city shall first obtain a permit from the city before doing so. Application for such permit shall be in writing to the city and shall state the time and place that applicant desires to break the curbing. The application shall contain such other information as is required by the city.

B. The city may, in its discretion, refuse to approve any permit to cut any curbing along the streets of the city when the cutting of the curbing shall constitute a traffic hazard, or

interfere in any way with the safety of the public in the use of the street or adjacent sidewalk, or in any way deteriorate or damage the street or interfere with the use thereof by the public. Only such portions of any curbing may be cut or removed as in the opinion of the building officer may be consistent with and not detrimental to the general public welfare. (Prior Code, Sec. 19-15, in part)

SECTION 14-212 FEE.

A fee as set by the city council by motion or resolution shall be paid to the city prior to obtaining the permit required in this article.

Cross Reference: See Appendix 1, Fee schedule, of this code.

SECTION 14-213 INSPECTION.

The removing of such curbing, the construction of the driveway and all other parts of the work in connection therewith shall be subject to the inspection and approval of the city.

SECTION 14-214 PENALTY

Any person who violates any provision of this chapter shall be guilty of a misdemeanor and, upon conviction, shall be punished as provided in Section 1-108 of this code.

CHAPTER 3

STREET CONSTRUCTION STANDARDS

Section 14-301	Compliance.
Section 14-302	Permit required.
Section 14-303	General specifications for street construction.
Section 14-304	Roadbed preparation.
Section 14-305	Base course.
Section 14-306	Pavement.
Section 14-307	Street width.
Section 14-308	Curbs and gutters.
Section 14-309	Driveways.
Section 14-310	Requirements for developers or paving contractors.
Section 14-311	City maintenance or improvement of existing streets.

SECTION 14-301 COMPLIANCE.

All streets and roads constructed or rebuilt in the City shall comply with the standards, specifications, and conditions set forth in this Chapter. (Ord. No. 321, 1/24/94)

SECTION 14-302 PERMIT REQUIRED.

No person shall construct, build, rebuild, improve, open, surface, grade, or otherwise perform any maintenance on a public street within the City without first obtaining a permit therefore. The fee for issuance of such permit shall be 1 ½% of the estimated construction cost. The application for permit shall include sufficient plans and specifications for construction to show compliance with the street standards and specifications as set forth in this Chapter. (Ord. No. 321, 1/24/94)

SECTION 14-303 GENERAL SPECIFICATIONS FOR STREET CONSTRUCTION.

A. These specifications set forth the minimum requirements for construction or reconstruction of streets within zoning districts and the corporate limits of the City. They shall be used with, and complement, the subdivision regulations of the City.

B. All materials and construction techniques shall be in accordance with the latest addition of the Oklahoma Department of Transportation's "Standard Specifications for Highway Construction."

C. All testing required by this Chapter shall be conducted by a consulting engineer or testing laboratory as designated by the City Manager, and paid for by the person(s) performing the work. The City reserves the right to require "Additional" testing to ensure these minimum requirements are being met. The City shall pay for any "Additional" testing that passes the minimum requirements; otherwise, the person(s) performing the work shall pay for the "Additional" testing that shows the material or work done fails to meet the requirements of this Chapter.

D. For reconstruction involving existing paved streets, plans and specifications shall be submitted prior to any construction work. The plans and specifications shall be in accordance with Subsection B above. This section shall not apply to streets being repaired, improved, maintained, or built by the City, rather the City street projects shall be governed by Section 11-311 of these regulations.

E. No dedication to the City of a private street or road shall be accepted unless the street or road meets all the minimum requirements of these specifications. (Ord. No. 321, 1/24/94)

SECTION 14-304 ROADBED PREPARATION.

All topsoil shall be removed from the limits of the proposed roadway and stockpiled for future use. This material shall be spread on all shoulder and ditch areas of the finished street to promote the establishment of vegetation. A load test shall be performed with a loaded scraper, loaded front loader, or loaded dump truck. Any unstable soils (soft areas) encountered in the compaction process shall be removed and replaced with an approved borrow material. A written statement shall be supplied to the City stating that the requirements in this section have been followed. (Ord. No. 321, 1/24/94)

SECTION 14-305 BASE COURSE.

A. Base course construction of all streets shall consist of base treated subgrade (approved by the City Engineer) in compliance with Section 307 of the latest addition of the Oklahoma Department of Transportation "Standard Specifications for Highway Construction." A base course modification design shall be submitted to the City Engineer for review.

B. Base testing standards:

1. Additive determination:

   a. One per two thousand four hundred (2,400) square yards;
   b. Minimum percent of additive; and,
   c. PI designation shall be six (6) or less;

2. Proctor:

a. One per two thousand four hundred (2,400) square yards.

3. Density :

a. One per one thousand (1,000) square yards and one per five hundred (500) square yards for roadway embankment including backfill.

b. Minimum ninety-five percent (95%) or standard proctor.
c. Prior to sub-grade modification, the roadway is inspected by a City Representative (i.e., Engineer or Inspector). At this time, the City Representative may request that the contractor dig down below the "Depth of Modification" and run a density test of the existing soil.

SECTION 14-306 PAVEMENT.

The City Representative prior to construction of Pavement shall be notified and shall inspect the base course construction of all streets. The pavement structure shall be either asphaltic or portland cement concrete (see attached typical sections).

A. Pavement requirements for Zoning Districts RM-1, C-1, C-2, C-3, I-1, I-2, and I-3:

1. Portland cement concrete shall consist of a six inch (6") thick slab. This shall be done in compliance with Sections 414, 701, and 723 of "Standard Specifications for Highway Construction" (see attached typical sections, pg 14-16.1).

2. Asphaltic concrete shall consist of a four inch (4") layer of type A covered with a two inch (2") layer of Type B. This shall be in compliance with Sections 411 and 708 of "Standard Specifications for Highway Construction" (see attached typical sections, pg 14-16.2).

B. Pavement requirements for Zoning Districts A-1, RE, RE-1, RS-1, RS-2, RS-3, RD-1, and RMH:

1. Portland cement concrete shall consist of a five inch (5") thick slab. This shall be done in compliance with sections 414, 701, and 723 of "Standard Specifications for Highway Construction" (see attached typical sections/A-1, RE, RE-1 pg 14-16.5/RS-1, RS-2, RS-3, RD-1, RMH pg 14-16.3).

2. Asphaltic concrete shall consist of a three inch (3") layer of type A covered with a two inch (2") layer of Type B. This shall be in compliance with Sections 411 and 708 of "Standard Specifications for Highway Construction" (see attached typical sections/A-1, RE, RE-1 pg 14-16.6/RS-1, RS-2, RS-3, RD-1, RMH pg 14-16.4).

C. Pavement requirements for Zoning district RE-2: Either of the following pavement requirements shall, at the option of the developer, be used in the RE-2 Zoning District:

1. Portland cement concrete shall consist of a five inch (5") thick slab. This shall be done in compliance with sections 414, 701, and 723 of "Standard Specifications for Highway Construction" (see attached typical sections, pg 14-16.5).

2. Asphaltic concrete with curb and gutter. Asphaltic concrete shall consist of a three inch (3") layer of type A covered with a two inch (2") layer of Type B. This shall be in compliance with Sections 411 and 708 of "Standard Specifications for Highway Construction" (see attached typical sections, pg 14-16.4).

All streets within a subdivision shall be the same type construction so as to provide uniformity of street design in each subdivision.

D. Pavement testing standards:

1. Portland cement concrete:

   (a) Strength shall be minimum 3,500 PSI, minimum 28 days.

   (b) Air content – 4% to 7%

   (c) Slump – 1" to 5".

   (d) Concrete compressive strength, 28 day – one set of four cylinders every 600 square yards.

   (e) Thickness – drilled core alternate lanes every 300 feet.

2. Asphaltic concrete:

   (a) Asphalt density – "Minimum of one per production day or one each every 600 tons".

   (b) Thickness – drilled core alternate lanes every 300 feet.

   (c) Extraction and gradation – "Minimum of one per production day or one each, every 600 tons"

SECTION 14-307 STREET WIDTH.

A. The minimum "local" street surface width shall be twenty-four (24) feet.

B. The minimum "collector" street surface shall be thirty (30) feet.

C. The minimum "arterial" street surface width shall be forty-six (46) feet. (Ord. No. 321, 1/24/94)

SECTION 14-308 CURBS AND GUTTERS.

A. Curbs and gutters are requirements in Zoning Districts: RE-2 (where street pavement type is asphaltic concrete), RS-1, RS-2, RS-3, RD-1, RM-1, RMH, C-1, C-2, C-3, I-1, I-2, and I-3.

B. Curb and gutter testing standards:

1. Portland cement concrete:
   (a) Strength shall be minimum Three Thousand Five Hundred (3,500) PSI, minimum twenty-eight (28) days.

   (b) Air content – 4% to 7%.

   (c) Slump – 1" to 5".

   (d) Concrete compressive strength, twenty-eight (28) days – one set of four (4) cylinders every 800 linear feet.

(Ord. No. 321, 1/24/94)

SECTION 14-309 DRIVEWAYS.

Driveway approaches shall be constructed in rights-of-way in those zoning districts that require curbs and gutters. (Ord. No. 321, 1/24/94)

SECTION 14-310 REQUIREMENTS FOR DEVELOPERS OR PAVING CONTRACTORS.

A. At the time of acceptance the developer or paving contractor shall post a five (5) year maintenance bond. The bond shall be for one hundred percent (100%) of the construction costs for the first two years, and fifteen percent (15%) for each remaining year.

B. Penalties shall be consistent with Sections 411 and 414 of "Standard Specifications for Highway Constructions." (Ord. No. 321, 1/24/94)

SECTION 14-311 CITY MAINTENANCE OR IMPROVEMENT OF EXISTING STREETS.

Since many of the streets in the City are composed of dirt, gravel, or shale surfaces, or are not built to current City standards, it may be necessary for the City to perform certain maintenance or improvements to these existing dedicated streets. Nothing in these regulations shall prohibit the City from performing such maintenance or improvements even though it may not meet the minimum standards and specifications of these street standards. It is the intent of these street standards that eventually the City and developers will construct, repair, and rebuild all City streets to the specifications set forth in these regulations. However, due to the number of miles of streets involved the City has a limited financial ability to reconstruct existing streets, and such streets will be constructed or reconstructed under the following conditions: Prior to major construction by the City of an existing street, an engineering study shall be obtained to determine the condition of the base and pavement of the street to determine the necessary scope of work. From this study a correlation can be made relative to what construction is necessary to meet these standards. The priority of street construction projects will be set by the City Council. A financial plan shall be developed for payment of the costs of street improvements providing a well-managed financial structure using the funds available to the City through existing funds, grants, loans, etc. to meet the financial obligations. At least once annually the City Council will develop and implement a schedule of paving improvements based on existing needs and updated to meet changing circumstances. (Ord. No. 321, 1/24/94)

SECTION 14-312 STANDARD STREET SPECIFICATIONS.

The following pages were adopted by Ordinance No. 398

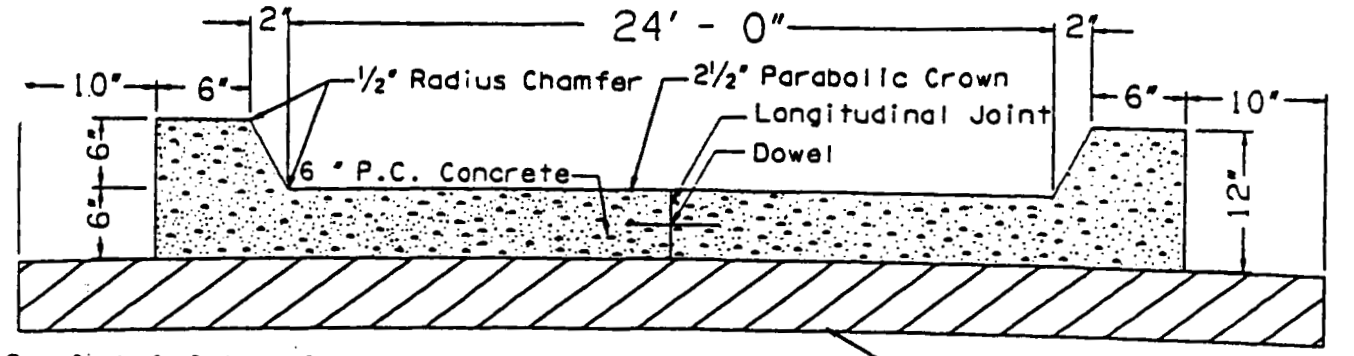

TYPICAL SECTION
P. C. CONCRETE PAVING

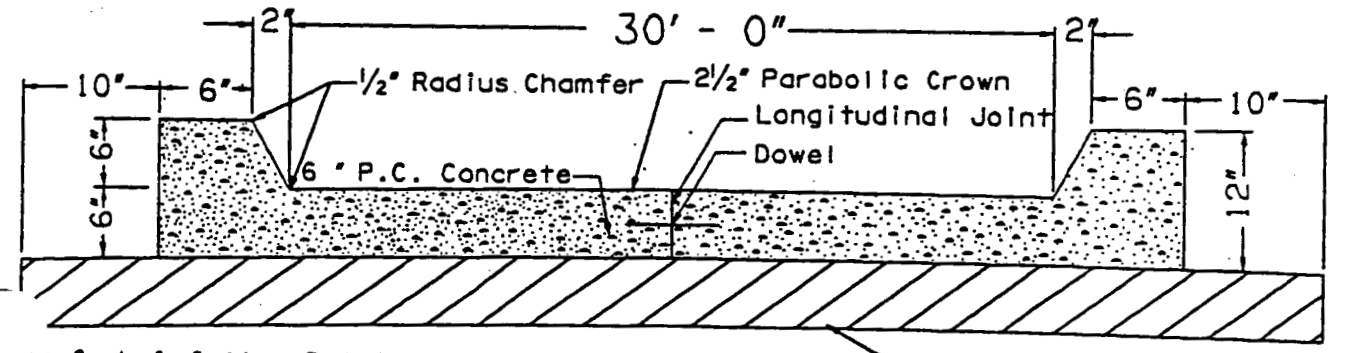

TYPICAL SECTION
P. C. CONCRETE PAVING

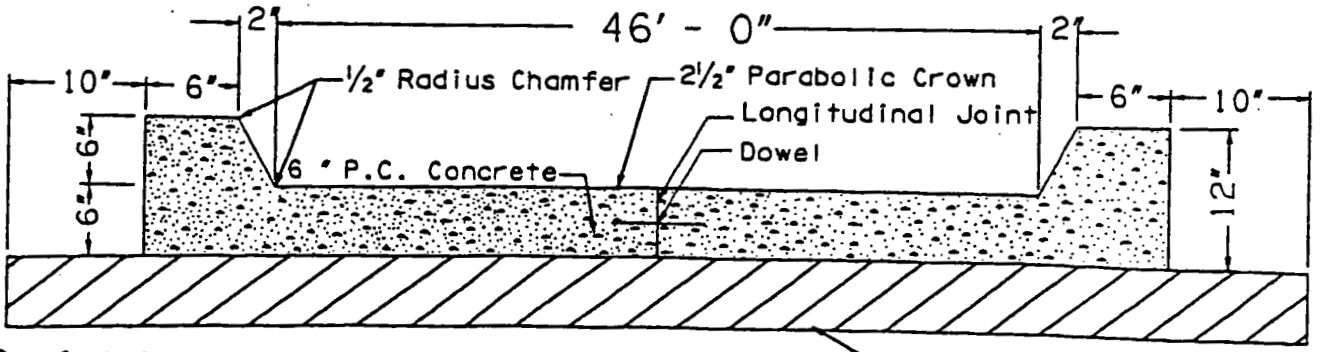

TYPICAL SECTION
P. C. CONCRETE PAVING

Zoning Districts RM-1, C-1, C-2, C-3, I-1, I-2 & I-3

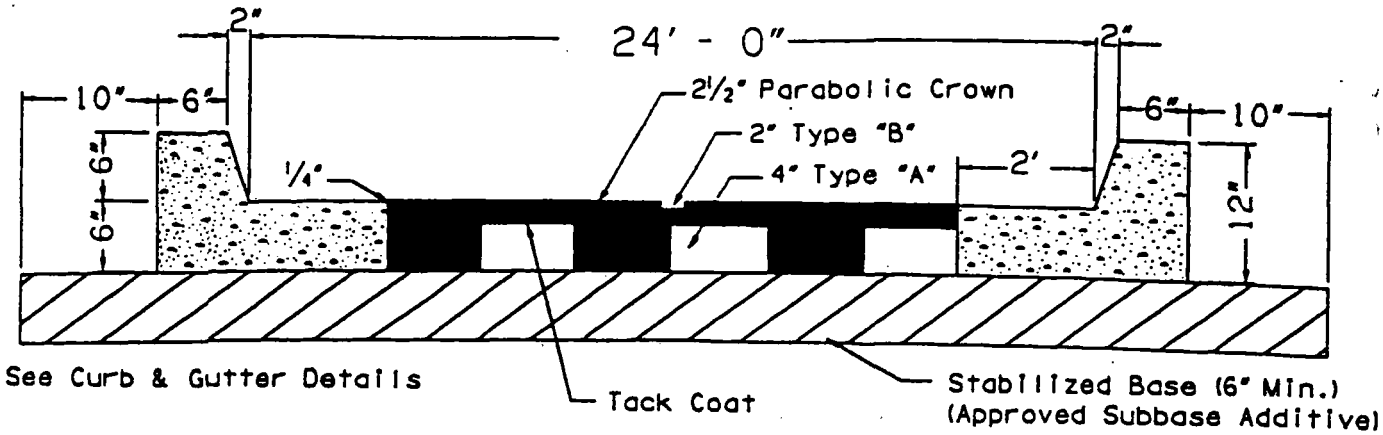

TYPICAL SECTION
ASPHALTIC CONCRETE PAVING

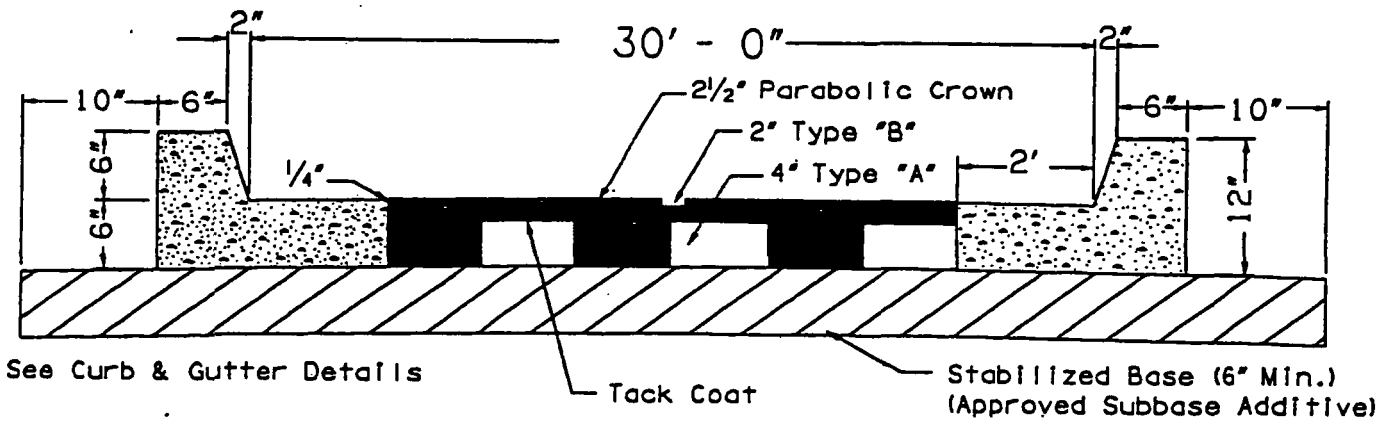

TYPICAL SECTION
ASPHALTIC CONCRETE PAVING

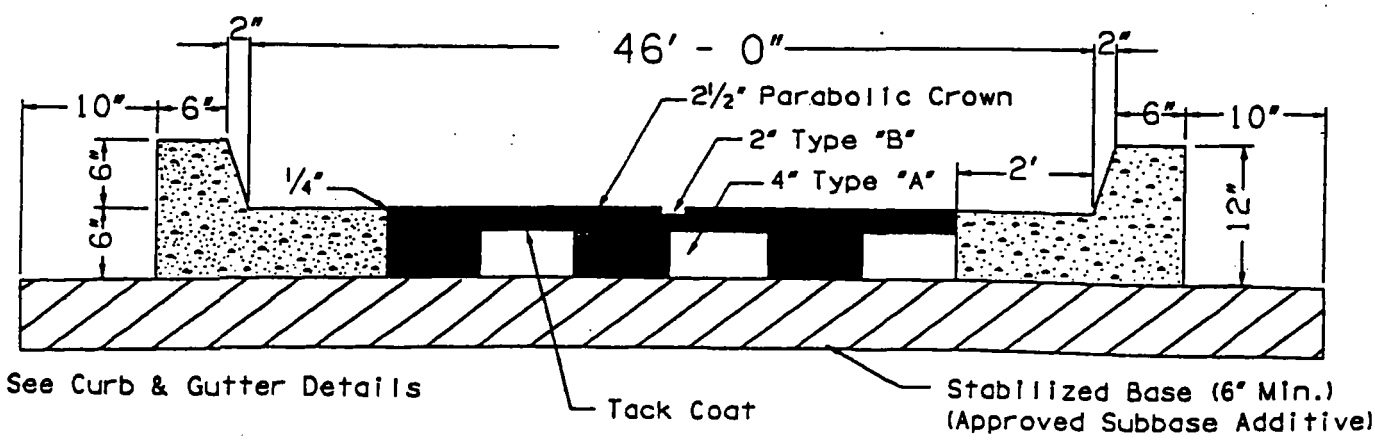

TYPICAL SECTION
ASPHALTIC CONCRETE PAVING

Zoning Districts RM-1, C-1, C-2, C-3, I-1, I-2 & I-3

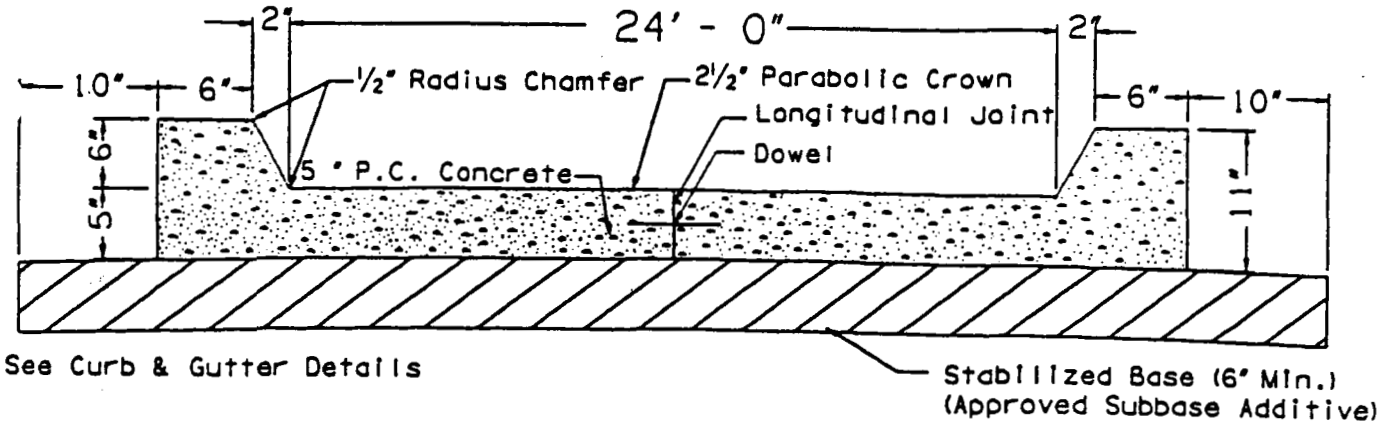

TYPICAL SECTION
P. C. CONCRETE PAVING

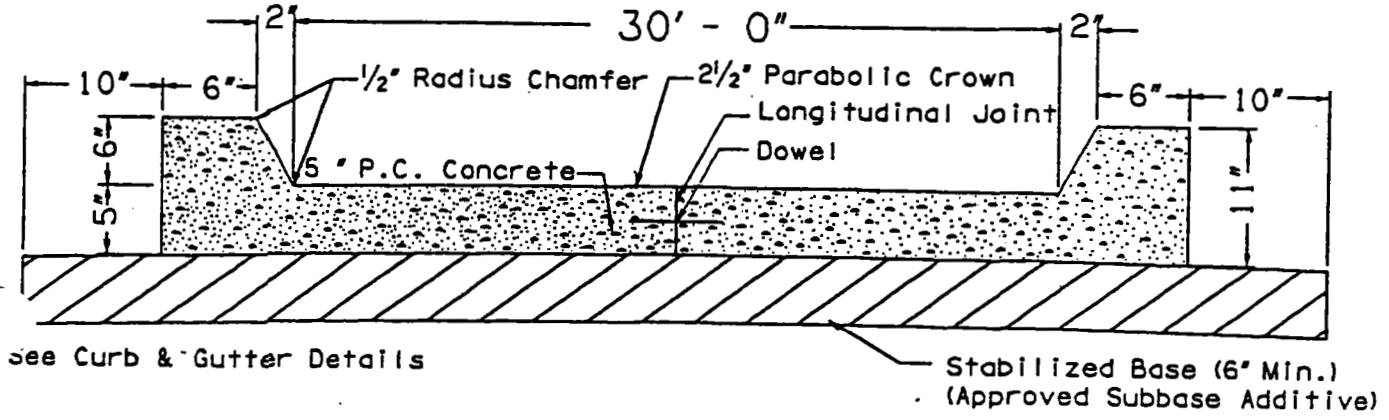

TYPICAL SECTION
P. C. CONCRETE PAVING

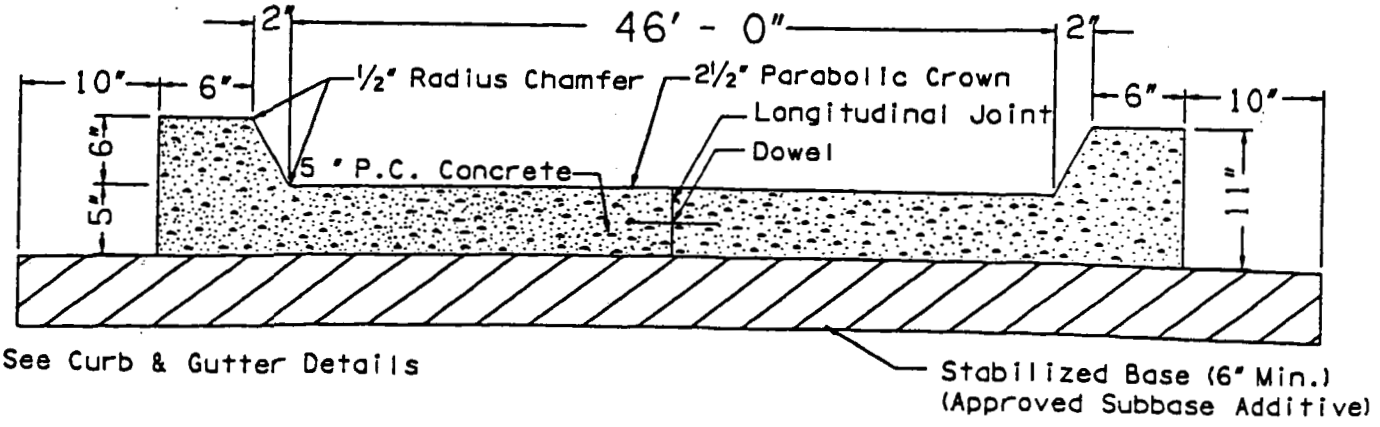

TYPICAL SECTION
P. C. CONCRETE PAVING

Zoning Districts RS-1. RS-2. RS-3. RD-1 & RMH

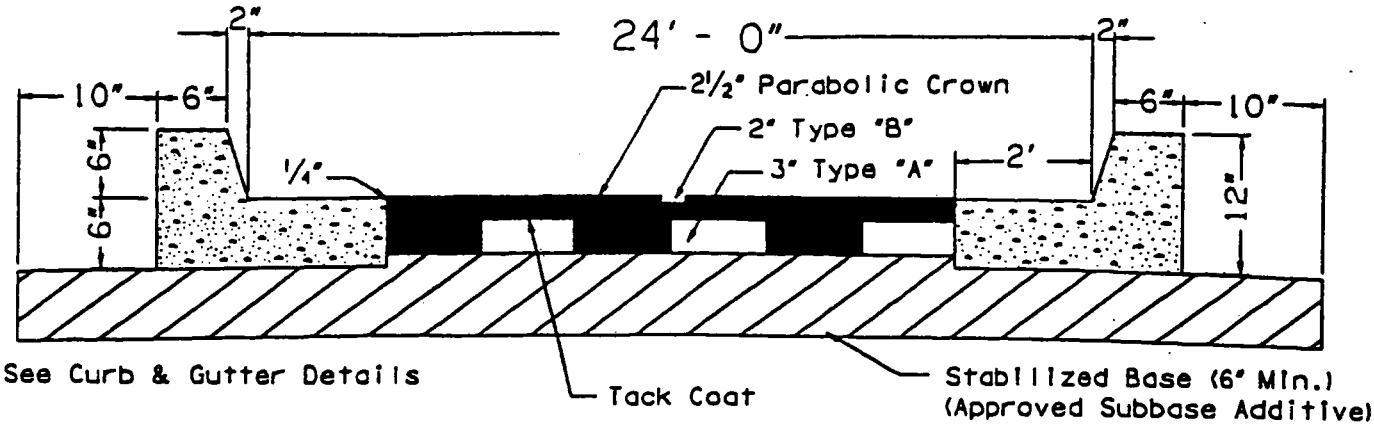

TYPICAL SECTION
ASPHALTIC CONCRETE PAVING

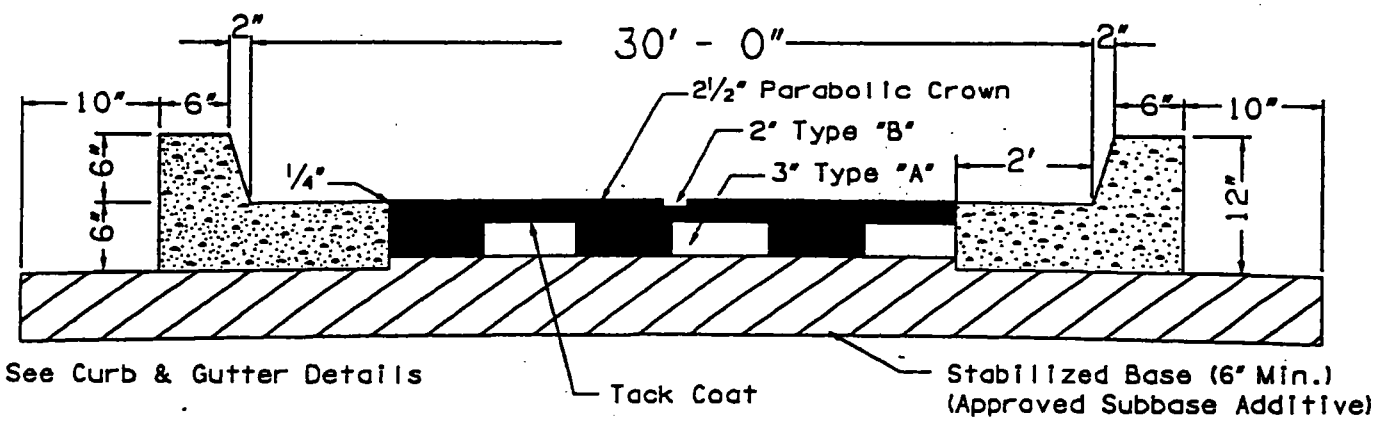

TYPICAL SECTION
ASPHALTIC CONCRETE PAVING

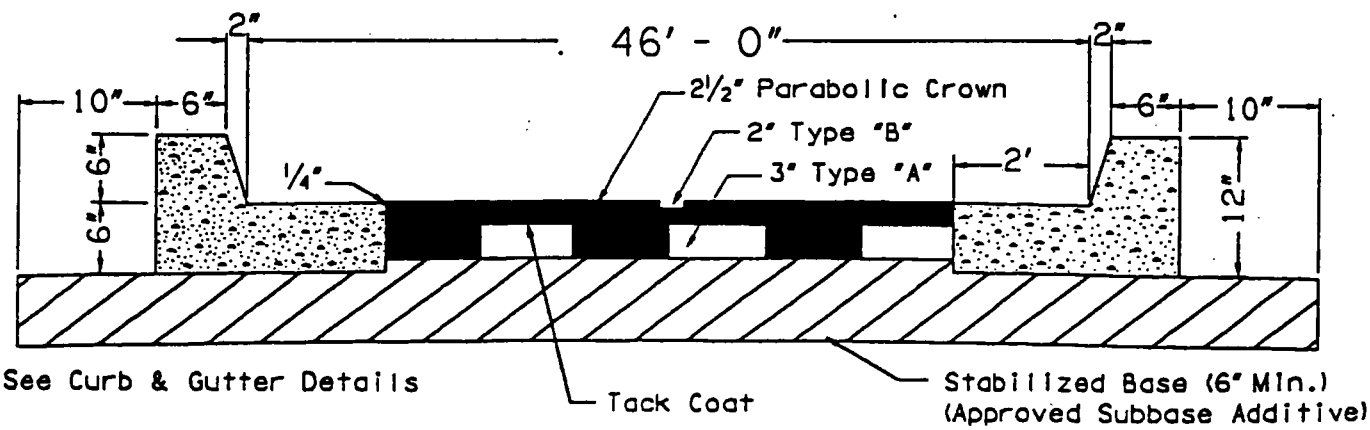

TYPICAL SECTION
ASPHALTIC CONCRETE PAVING

Zoning Districts RE-2, RS-1, RS-2, RS-3, RD-1 & RMH

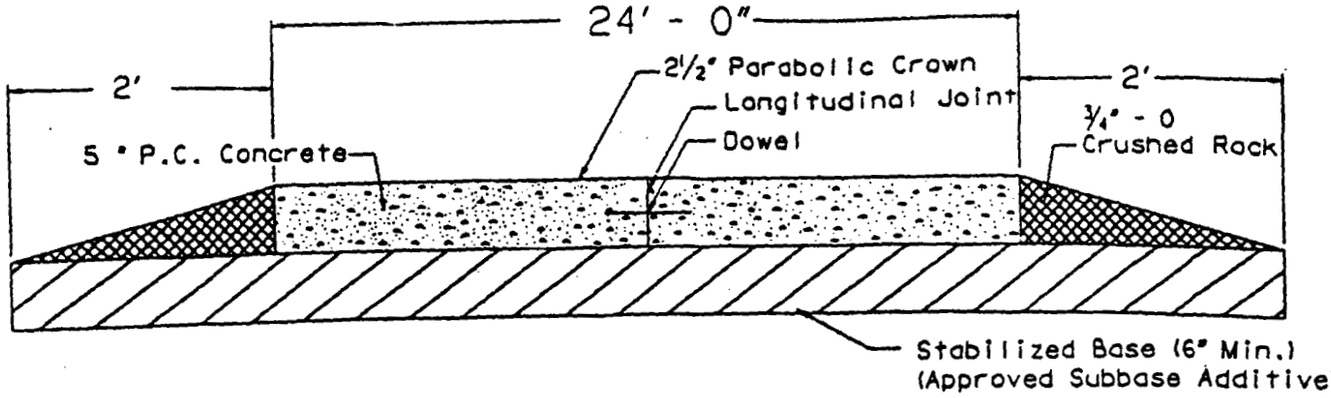

TYPICAL SECTION
P. C. CONCRETE PAVING

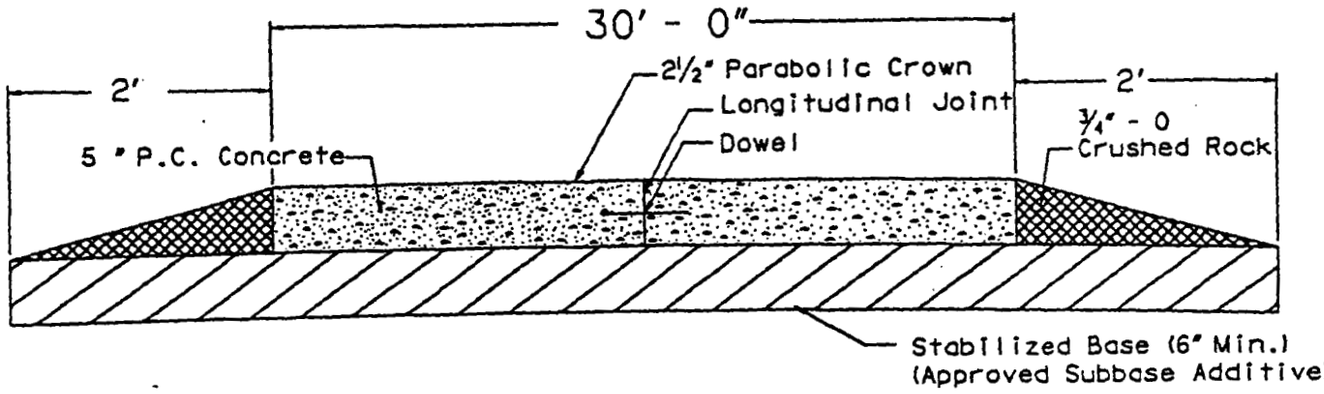

TYPICAL SECTION
P. C. CONCRETE PAVING

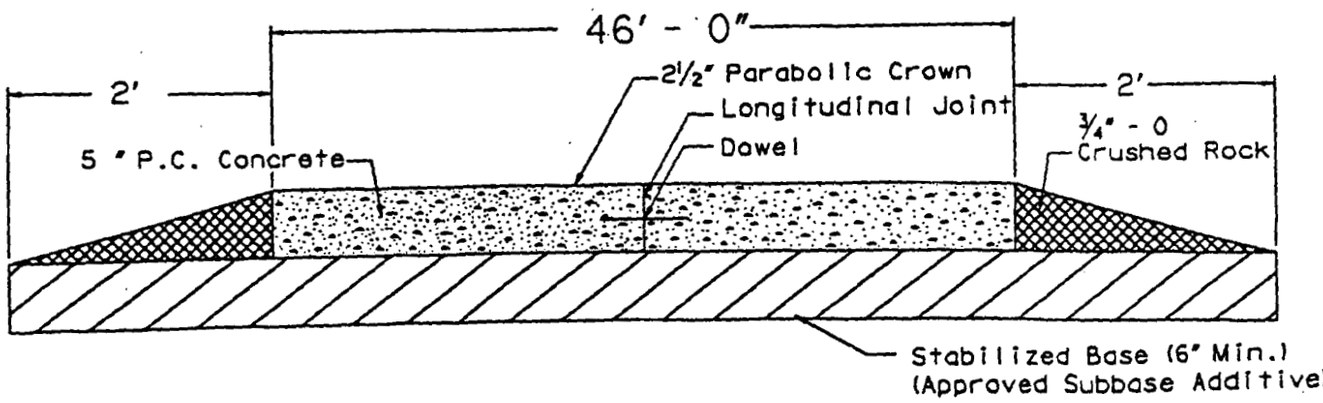

TYPICAL SECTION
P. C. CONCRETE PAVING

Zoning Districts A-1, RE, RE-1 & RE-2

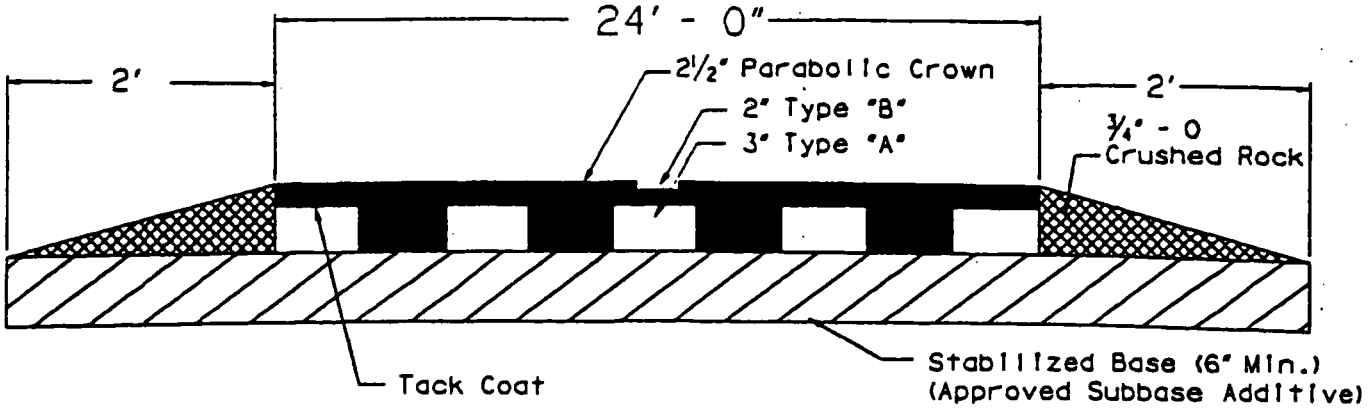

TYPICAL SECTION
ASPHALTIC CONCRETE PAVING

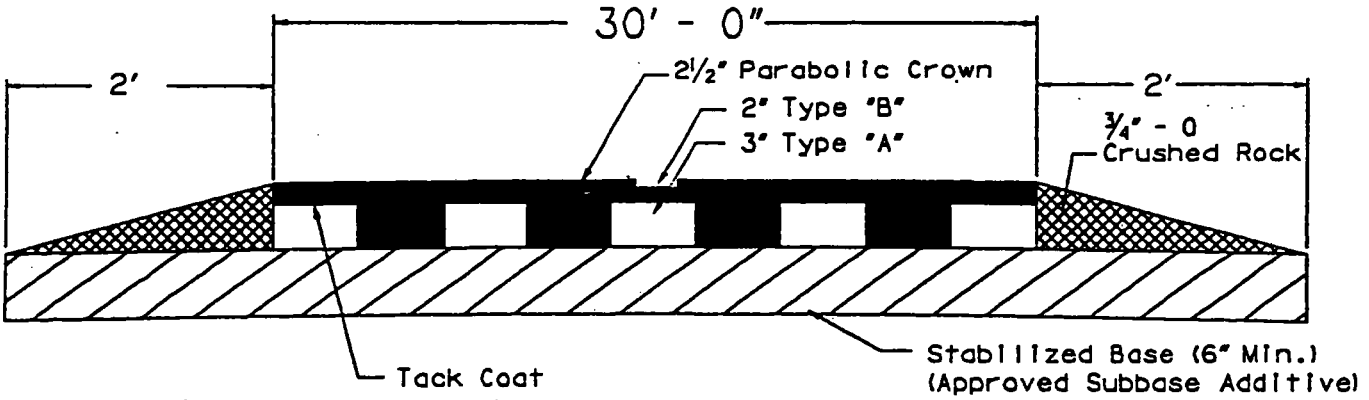

TYPICAL SECTION
ASPHALTIC CONCRETE PAVING

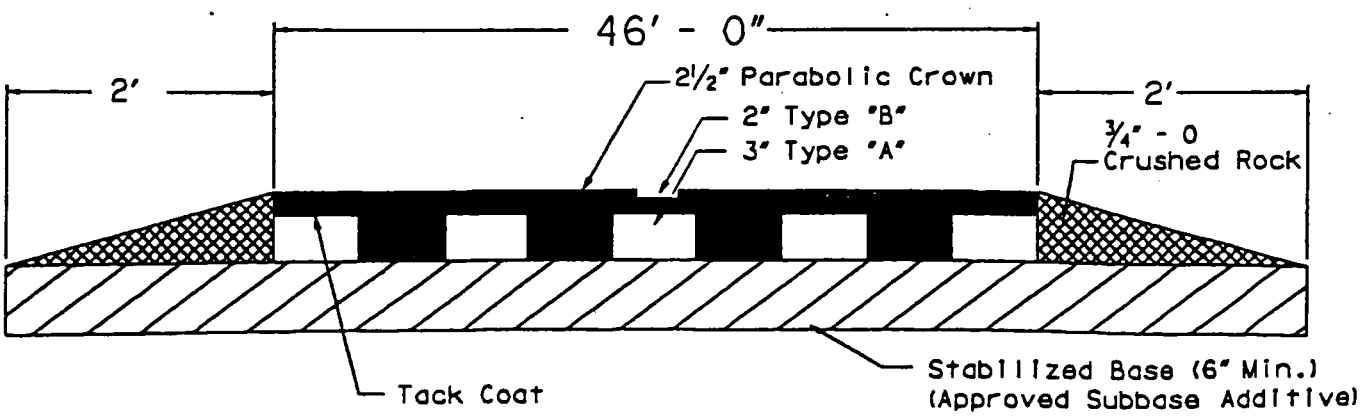

TYPICAL SECTION
ASPHALTIC CONCRETE PAVING

Zoning Districts A-1, RE & RE-1

JOINT LAYOUT DETAIL

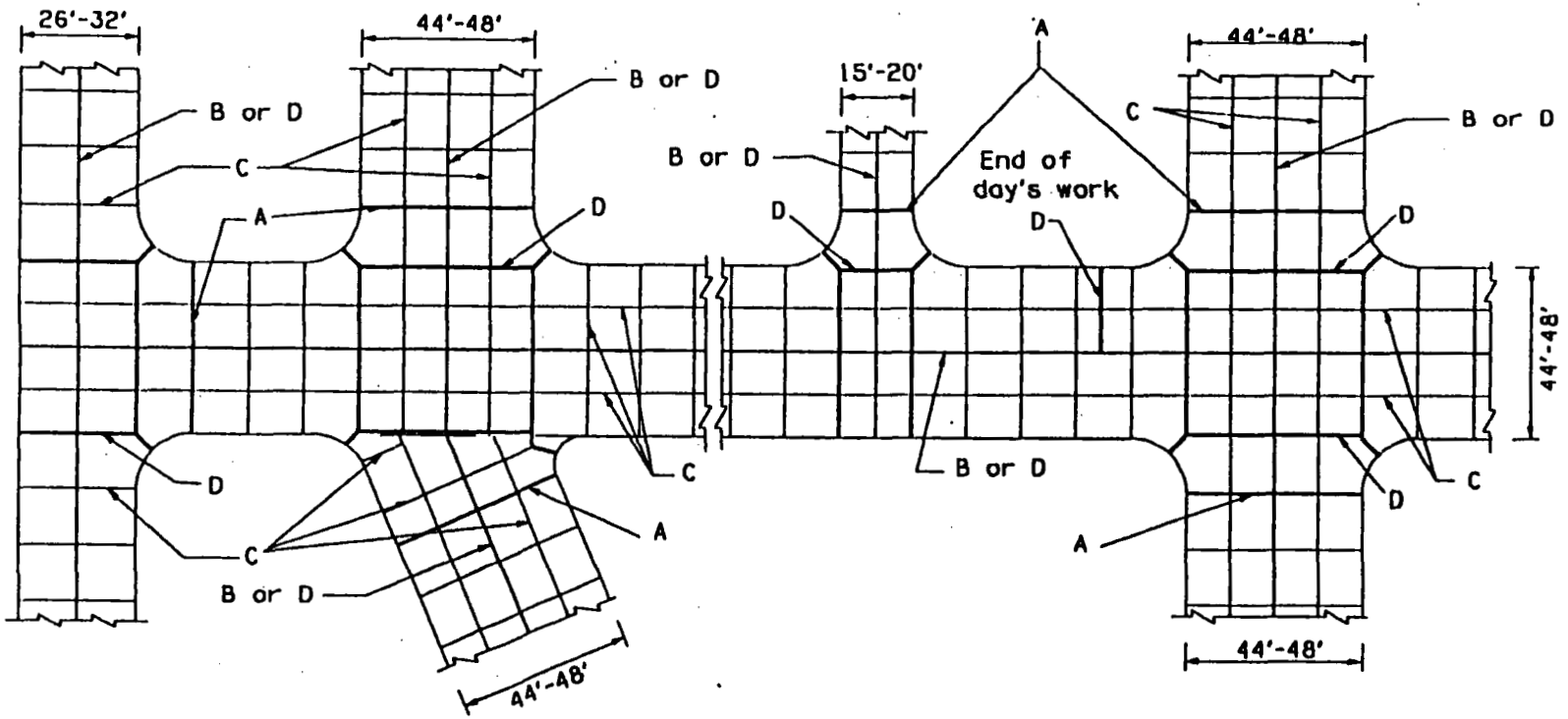

A - EXPANSION JOINT / ISOLATION JOINT
B - LONGITUDINAL JOINT
C - NON-DOWELED CONTRACTION JOINT
D - TIED BUTT JOINT LONGITUDINAL CONSTRUCTION JOINT

NOTE : Maximum Joint Spacing 15'
or as Directed by the Engineer.

CROWN SCHEDULE	
Full Width	To 33' with 6" Curb
	2-1/2"

LONGITUDINAL JOINT DETAILS

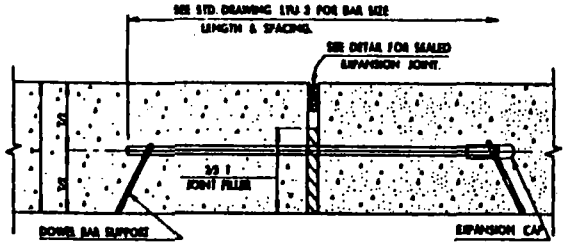

A - EXPANSION JOINT /ISOLATION JOINT

■ OMIT DOWEL BARS, CAPS & SUPPORTS FOR ISOLATION JOINTS
SEE STANDARD DRAWING LTJ 3 FOR DETAILS OF ALTERNATE TYPES OF DOWEL BAR SUPPORTS.

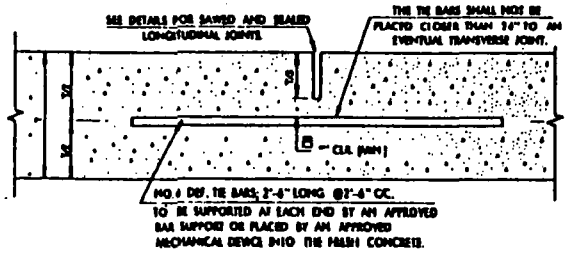

B - LONGITUDINAL JOINT

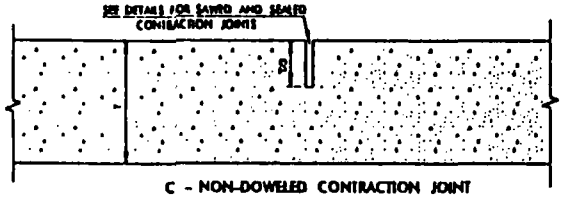

C - NON-DOWELED CONTRACTION JOINT

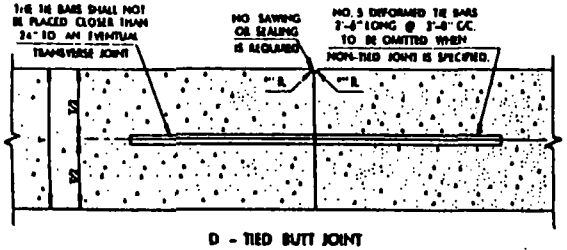

D - TIED BUTT JOINT
LONGITUDINAL CONSTRUCTION JOINT

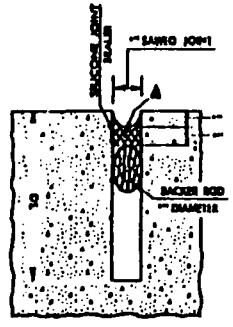

ALTERNATE DETAILS
SAWED AND SEALED CONTRACTION, AND LONGITUDINAL JOINTS

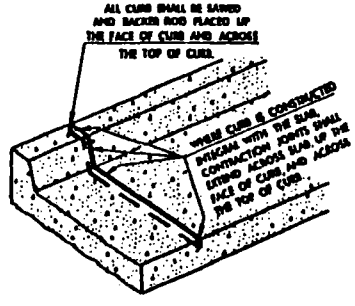

CONTRACTION JOINT WITH
INTEGRAL CURB

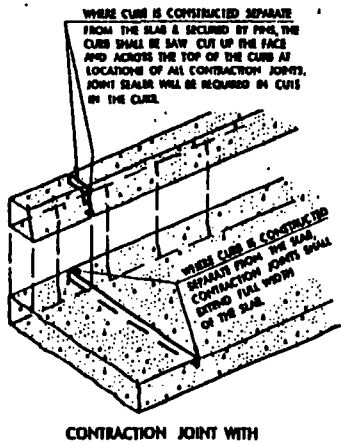

CONTRACTION JOINT WITH
SEPARATE CURB

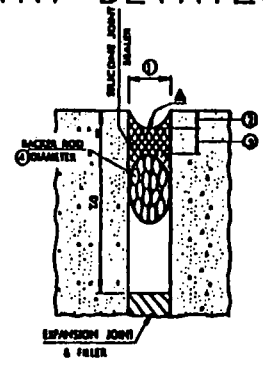

SEALED EXPANSION JOINT

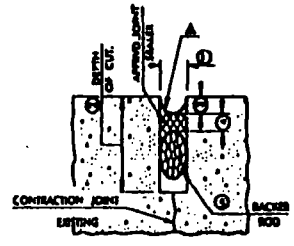

JOINT REHABILITATION DETAILS

JOINT REHABILITATION TREATMENT TABLE				
JOINT WIDTH	DEPTH OF CUT	SEALANT RECESS DEPTH	SEALANT THICKNESS	BACKER ROD DIAMETER
INCHES ①	INCHES ②	INCHES ③	INCHES ④	INCHES ⑤
**	1**	** (MIN)	**	**
**	1**	** (MIN)	**	**
**	1**	** (MIN)	**	**
**	1**	** (MIN)	**	**
**	1**	** (MIN)	**	1"
1"	2"	—	—	1**
OVER 1"	OVER 2"	—	—	1** ◊

SEE SEC. 701.08(b) OF THE STD. SPECIFICATIONS

JOINT REHABILITATION - POLYMER SEALANT

JOINT REHABILITATION TREATMENT TABLE				
JOINT WIDTH	DEPTH OF CUT	SEALANT RECESS DEPTH	SILICONE SEALANT THICKNESS	BACKER ROD DIAMETER
INCHES ①	INCHES ②	INCHES ③	INCHES ④	INCHES ⑤
**	1**	**	**	**
**	1**	**	**	**
**	1**	**	**	**
**	1**	**	**	1"
1"	2"	**	**	1**
OVER 1"	OVER 2"	**	**	2**

SEE SEC. 701.08(f) OF THE STANDARD SPECIFICATIONS

JOINT REHABILITATION - SILICONE SEALANT

EXPANSION JOINT /ISOLATION JOINT TREATMENT TABLE			
JOINT WIDTH ①	SEALANT RECESS DEPTH ②	SILICONE SEALANT THICKNESS ③	BACKER ROD DIAMETER ④
INCHES	INCHES	INCHES	INCHES
**	**	**	**
**	**	**	**
1"	**	**	1**
1**	**	**	2"
2"	**	**	2**

DETAILS FOR SEALED
EXPANSION /ISOLATION JOINT

EXPANSION OR ISOLATION JOINT WIDTH SHALL BE 12", UNLESS OTHERWISE SPECIFIED ON THE PLANS. TABLE VALUES, AS SHOWN THE TABLE, SHALL BE USED IN THOSE SPECIFIED CASES.

GENERAL NOTES

1. ALL CONSTRUCTION AND MATERIALS REQUIREMENTS SHALL BE IN ACCORDANCE WITH THE 1999 ENGLISH STANDARD SPECIFICATIONS.
2. ONLY SILICONE SEALANT MEETING REQUIREMENTS OF THE 1999 ENGLISH STANDARD SPECIFICATIONS SHALL BE ACCEPTABLE FOR USE.
3. ALL JOINTS SHALL BE CLEANED IN ACCORDANCE WITH 1999 ENGLISH STANDARD SPECIFICATIONS 614.04(d) AND 619.04. WATER FLUSHING AND AIR CLEANING OF JOINT SHALL BE IN ONLY ONE DIRECTION FORWARD. SANDBLASTING SHALL BE PERFORMED IN TWO PASSES, ONE FOR EACH FACE OF THE JOINT.
4. THE SHAPE FACTOR COMBINED WITH JOINT CLEANNESS IS THE CRITICAL COMBINATION NECESSARY TO GUARANTEE DESIRED BONDING AND FUNCTION OF SEALED JOINTS. NO TOLERANCE EXCEPT THOSE SHOWN HERE WILL BE ALLOWED.
5. ▲ THE JOINT SHAPE FACTOR IS DEFINED AS THE FINAL PRESSED SHAPE OF THE SILICONE MATERIAL. THE TOOLING OPERATION WILL FINALY PRESS THE FRESHLY APPLIED MATERIAL INTIMATELY AGAINST THE CUT SIDES OF THE JOINTS AND THE BACKER ROD SURFACES. THE ROUNDED SHAPE ON TOP AND BOTTOM OF THE SILICONE ALLOWS THE SEALANT TO PROPERLY FLEX BUT MAINTAIN ADHERANCE TO THE PAVING.
6. ◊ ON JOINTED PORTLAND CEMENT CONCRETE PAVEMENTS, DOWELLED CONTRACTION JOINTS SHALL BE USED ON DRIVING LANES ONLY. CONCRETE SHOULDERS SHALL NOT BE DOWELLED UNLESS SPECIFIED ON THE PLANS.
7. LONGITUDINAL JOINTS BETWEEN PAVEMENT AND TIED CONCRETE SHOULDERS SHALL NOT BE SAWED OR SEALED UNLESS OTHERWISE SHOWN ON THE PLANS.
8. ■ ON ALL SAWED JOINTS, THE REM DEPTH SHALL CLEAR DOWEL BARS, TIE BARS AND/OR REINFORCING STEEL BY A MINIMUM OF 1/2".
9. CONTRACTION JOINTS IN JOINTED P.C. PAVEMENT SHALL BE AT APPROXIMATELY 15'-0" CENTERS, UNLESS OTHERWISE SPECIFIED ON THE PLANS.

CONCRETE CURB AND GUTTER DETAIL

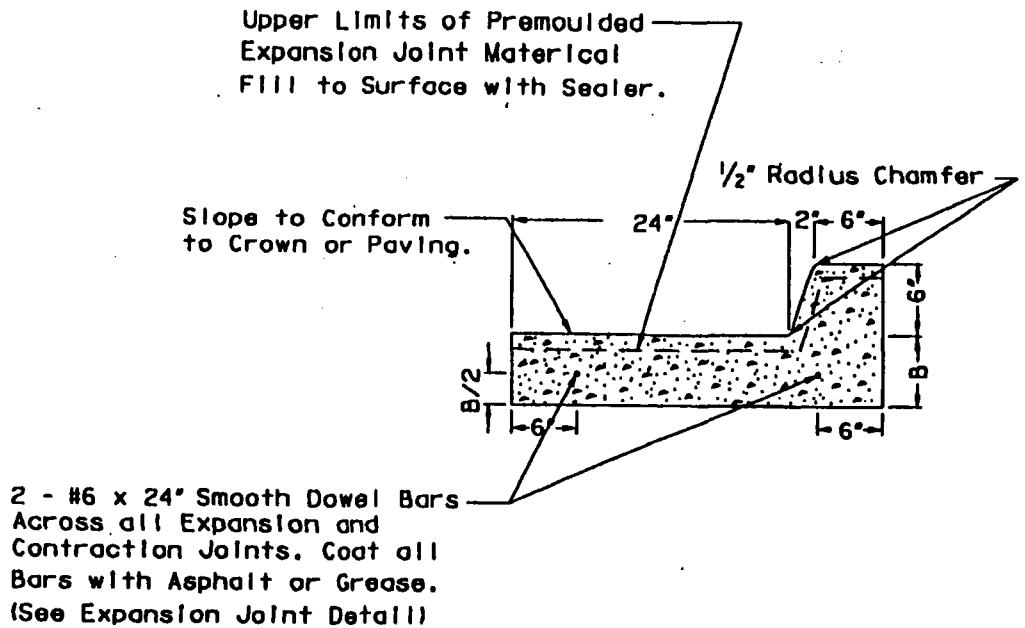

NOTE : Maximum Joint Spacing 15' or as Directed by the Engineer.

	Up to 33' (Residentall Streets)	32' and Over (Thoroughfare Streets)
A	6"	6"
B	6"	6"

TYPICAL CONCRETE CURB TYPES

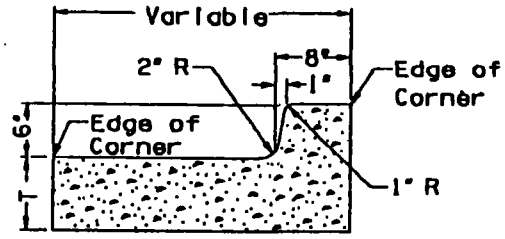

COMBINED CURB AND GUTTER

(6" BARRIER CURB)

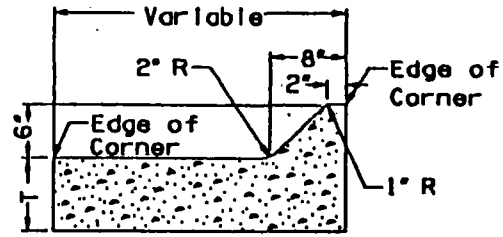

COMBINED CURB AND GUTTER

(6" MOUNTABLE CURB)

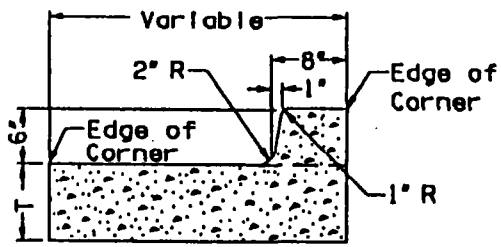

INTEGRAL CURB

(6" BARRIER CURB)

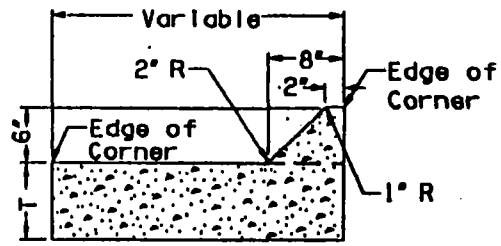

INTEGRAL CURB

(6" MOUNTABLE CURB)

NOTE :

1. T-dimension equals the thickness shown on Typical Section.
2. Combined Curb and Gutter used with Asphalt Surface.
3. Integral Curb used with Concrete Surfave.

8.15 Curbs and Curbed Sections

Curbs are often used on urban facilities to control drainage, delineate the pavement edge, channelize vehicular movements, control access, limit right-of-way needs, provide separation between vehicles and pedestrians and present an attractive appearance. In urban areas, curbs have a major benefit in containing the drainage within the pavement area and in channelizing or controlling traffic into and out of adjacent properties.

8.1.5.1 Warrants (Curbed Section)

Selecting a curbed section or uncurbed section depends upon many variables, including vehicular speeds, urban/rural location, drainage and construction costs. The following discusses those factors which will determine whether or not a curbed section is warranted:

1. Urban Location. Because of restricted right- of-way and other constraints, curbed sections are typically used in urban areas.

Suburban Location. Where design speeds 50 mph or more, uncurbed sections are typically used. The exceptions listed under #3 for rural locations also apply to high-speed suburban facilities. Where design speeds are less than 50 mph, the use of a curbed or uncurbed section will be made on a project-by-project basis considering right-of-way constraints, drainage, pedestrian activity, channelization needs, driveway access control, etc.

3. Rural Location. The use of curbs on rural highways is usually limited to conditions such as the following:

a. where a raised median is present;

b. where there is sufficient development along the highway and there is a need to channelize traffic into and out of properties;

c. where it is absolutely necessary to control drainage;

d. where restricted right-of-way provides no room for roadside ditches; and/or

e. at other sites (e.g., interchanges, intersections) as determined by the Geometric Design Branch.

8.1.5.2 Curb Types

There are two basic types of curbs - mountable and barrier. By definition, mountable curbs have a height of 6 inches or less with a face no steeper than 1 horizontal to 3 vertical. Barrier curbs may range in height between 6 inches and 12 inches with a face steeper than 1 horizontal to 3 vertical.

Figure 8.1C presents the basic curb types used by ODOT. The ODOT *Standard Drawings* provide additional information on the design details and placement for the different curb types. This includes details on driveway radii, construction items, etc.

8.1.5.3 Curb Type Selection

The following discusses those factors which should be considered when selecting a curb type:

1. Material. Concrete curbs are typically used.

2. Outside Curb. Barrier curbs are typically used on the outside of the roadway.

3. Raised Medians. Mountable curbs are typically used with raised medians.

4. Speeds. Barrier curbs may be used where the design speed is 45 mph or less. Mountable curbs may be used at any design speed.

5. Vehicular Encroachment. Where sidewalks, roadside appurtenances, etc., are present, it is desirable to restrict vehicular encroachment beyond the curb. Although no curb type will prohibit encroachments, barrier curbs are superior to mountable curbs. Where vehicular encroachment is permissible or even desirable, mountable curbs should be used.

6. Sidewalks. Where sidewalks are present, barrier curbs are typically used.

7. Local Practices. Where local practices differ from ODOT practices, ODOT criteria should prevail on State highways. On non-State highways, local practices will normally govern.

DRIVEWAY DETAILS FOR P.C. CONC. PAVING

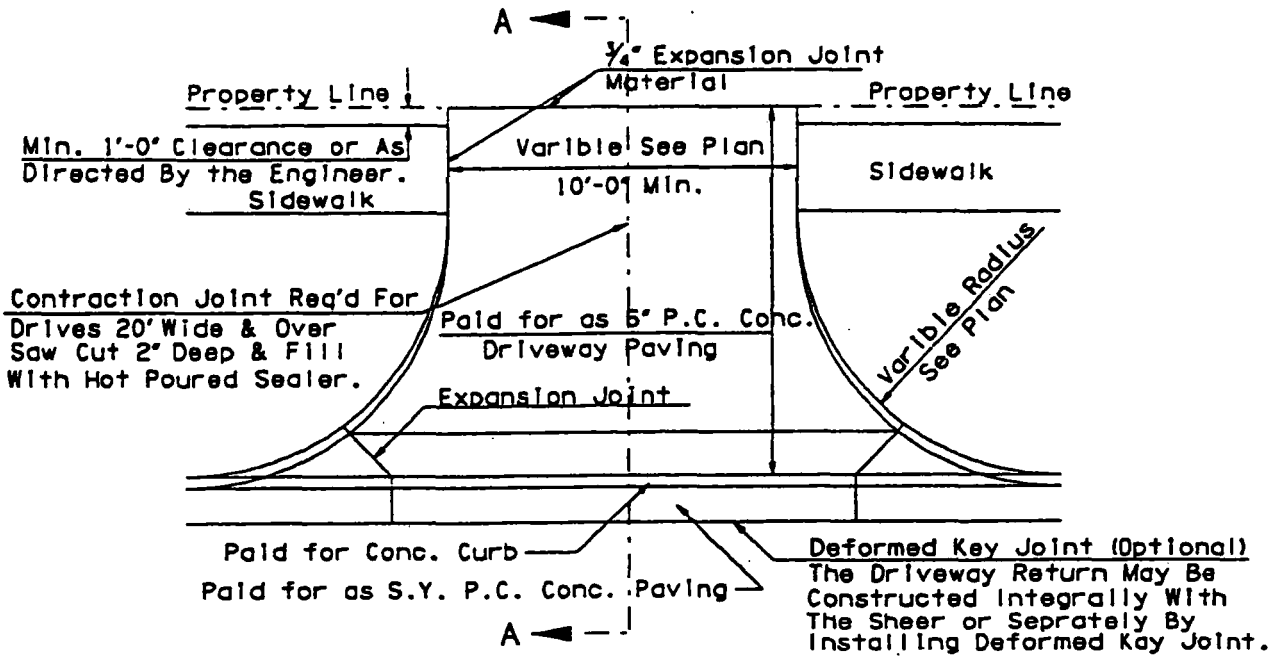

NOTE :

1. A 5'-0" Minimum Radius Is Approved for One & Two Family Residences Not Abutting A Limited Access or Major Street. All other Driveways Will Have A 15' Minimum Radius.

2. Should A Different Curb & Gutter Section be Used (Other than Shown) Refer to the Curb and Gutter Detail for Dimensions.

3. Expansion Joint at Driveway Returns Shall be Full Expansion Joints Extending Completly Across the Street.

4. Curb Cuts Exceeding 42' Must be Approved by the City Engineer.

SECTION A-A

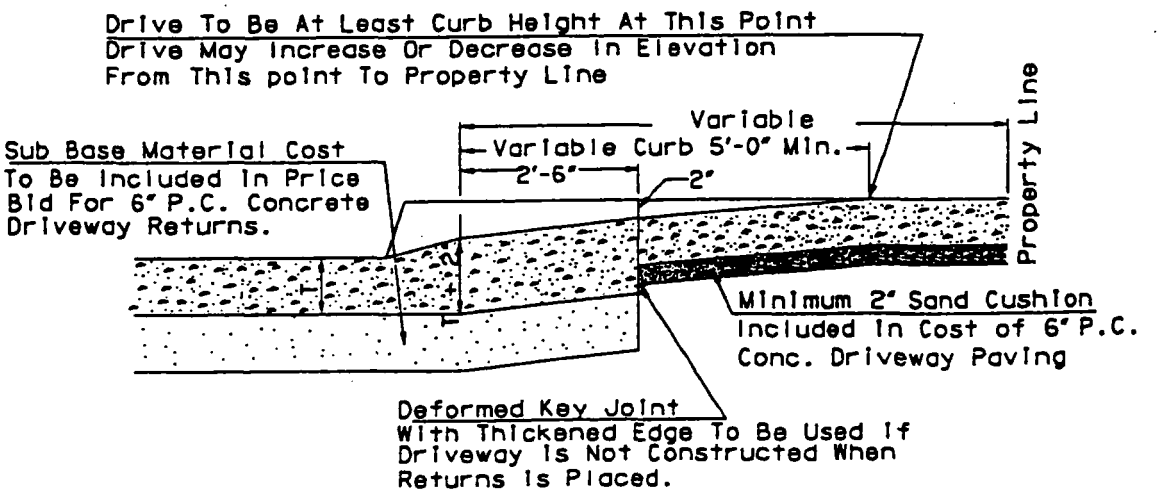

NEW CONSTRUCTION

DRIVEWAY DETAILS FOR ASPHALT PAVING

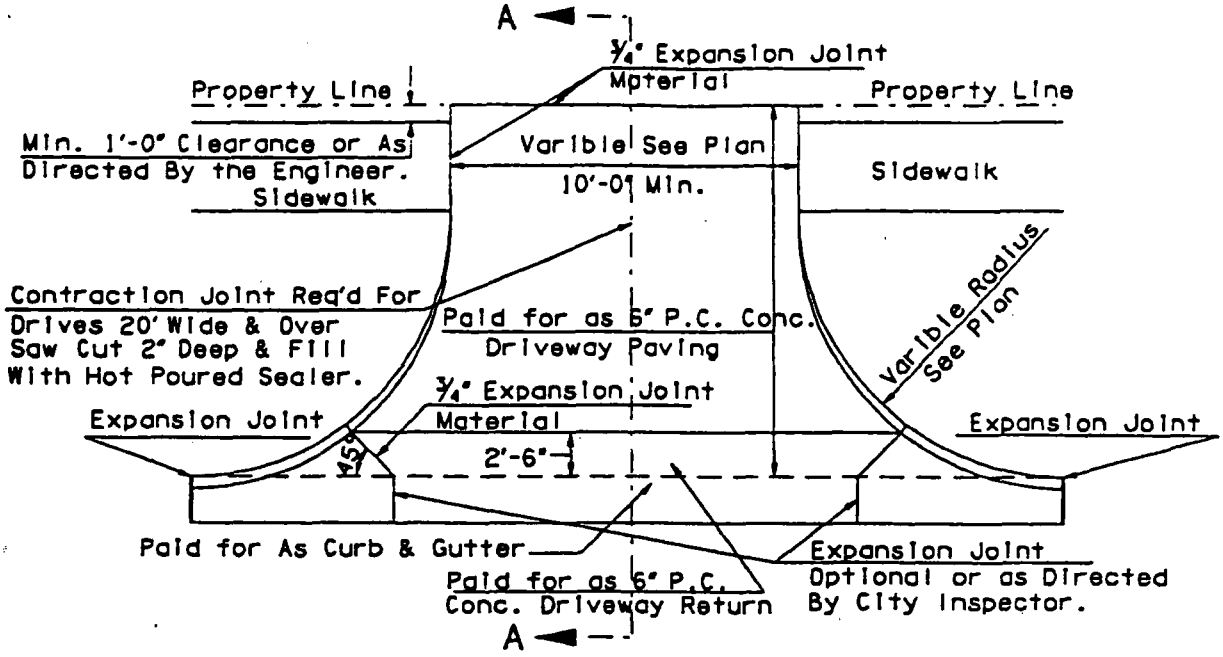

NOTE :

1. A 5'-0" Minimum Radius Is Approved for One & Two Family Residences Not Abutting A Limited Access or Major Street. All other Driveways Will Have A 15' Minimum Radius.

2. Should A Different Curb & Gutter Section be Used (Other than Shown) Refer to the Curb and Gutter Detail for Dimensions.

SECTION A-A

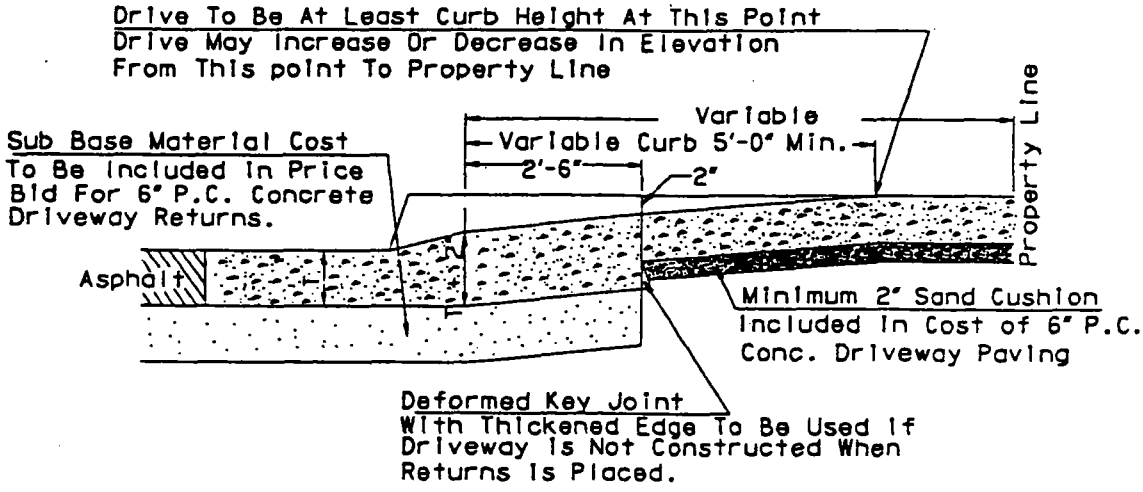

NEW CONSTRUCTION

DRIVEWAY DETAILS FOR ASPHALT PAVING

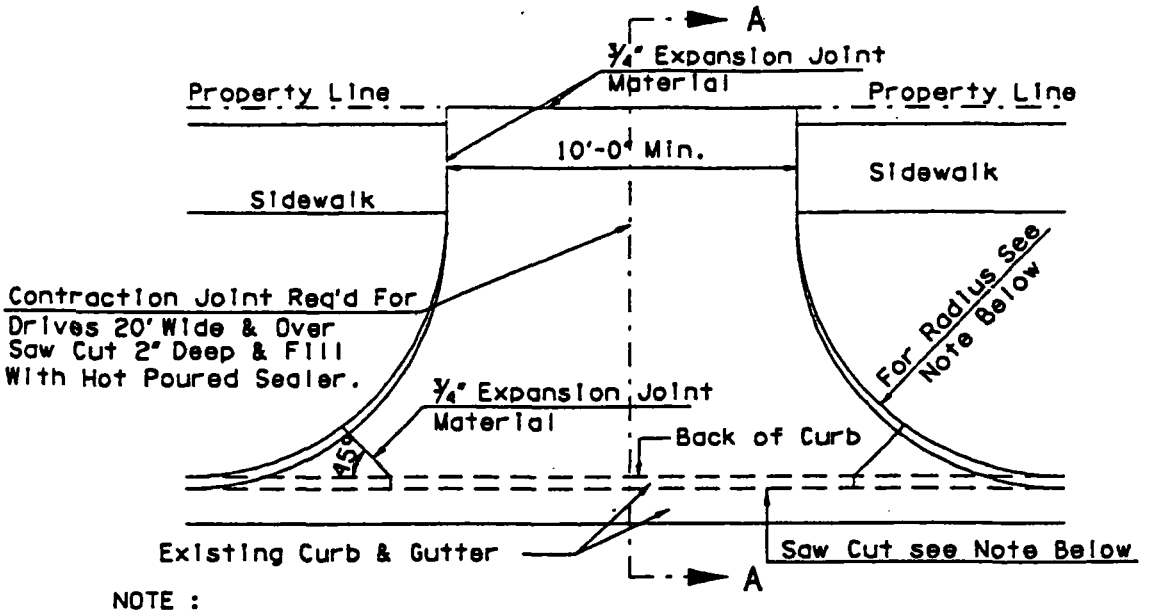

NOTE :

1. If Existing Gutter Holds Water The Contractor Shall Notify The City Engineer Before Starting Work. The New Work Will Not Be Accepted If The Gutter Holds Water Across The Drive Or On Either Side.

2. The Driveway Contractor May Saw Cut And Remove The Complete Curb And Gutter Section Or The Curb Only On A 24" Gutter Section If The Gutter Is In Good Condition. Remove All Of Gutter When Connecting With 10" Gutter. Saw Cuts Shall Be 2" Or 1/3 The Depth Of The Gutter , Which Ever Is Greater. Saw Cuts Shall Include The Top And Face Of Curb As Well As The Gutter. Saw Cuts Shall Be Made Prior To The Removal Of Concrete.

3. A 5'-0" Minimum Radius Is Approved For One And Two Family Residences Not Abutting A Limited Access Or Major Street. All Other Driveways Will Have A Minimum 15' Radius.

4. Do Not Turn Radius In Front Of Adjacent Property Without Written Permission From Adjacent Property Owner.

5. Curb Cuts Exceeding 40' Must Be Approved By The City Engineer.

SECTION A-A

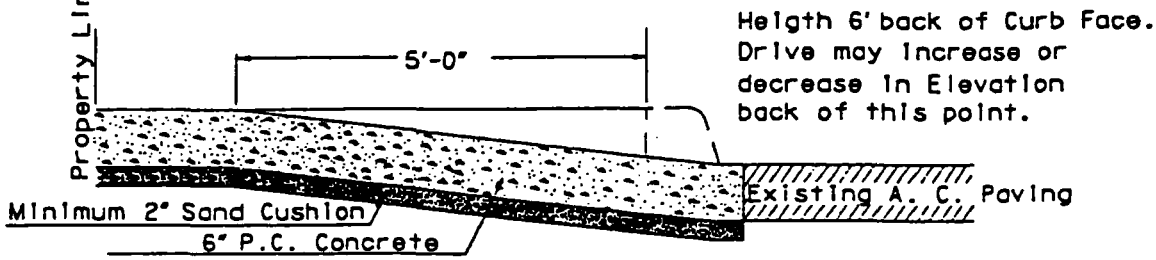

EXISTING PAVING

DRIVEWAY DETAILS FOR P.C. CONC. PAVING

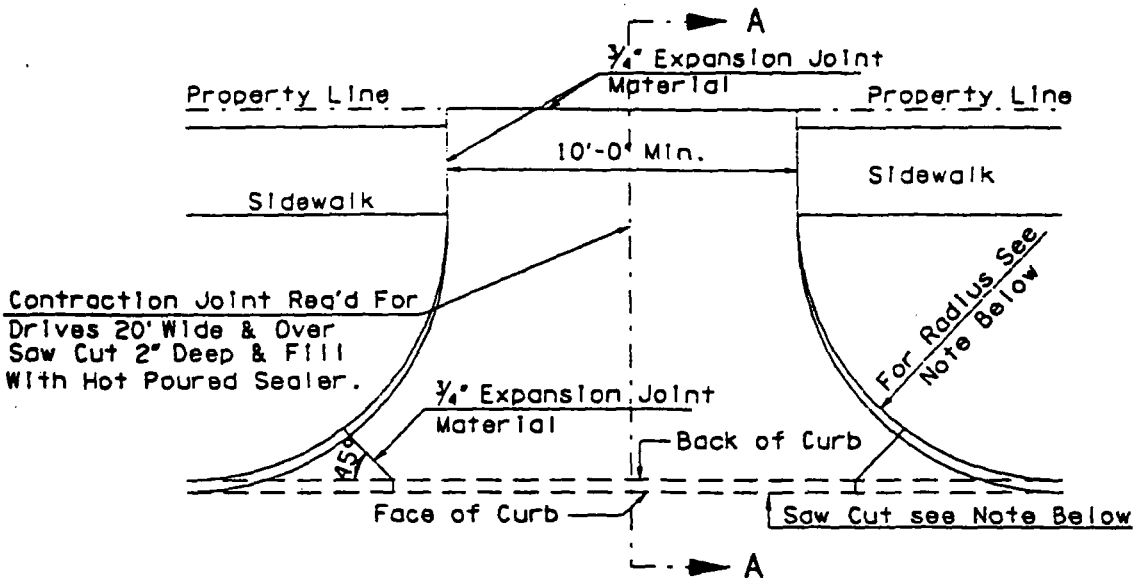

NOTE :

1. Do Not Turn Radius In Front Of Adjacent Property Without Written Permission From Adjacent Property Owner.

2. A 5'-0" Minimum Radius Is Approved For One And Two Family Residences Not Abutting A Limited Access Or Major Street. All Other Driveways Will Have A Minimum 15' Radius.

3. The Driveway Contractor May Saw Cut And Remove The Complete Curb And Gutter Section Or The Curb Only On A 24" Gutter Section If The Gutter Is In Good Condition. Remove All Of Gutter When Connecting With 10" Gutter. Saw Cuts Shall Be 2" Or 1/3 The Depth Of The Gutter , Which Ever Is Greater. Saw Cuts Shall Include The Top And Face Of Curb As Well As The Gutter. Saw Cuts Shall Be Made Prior To The Removal Of Concrete.

4. If A Gutter Holds Water Prior To Any Construction By The Driveway Contractor, He Should Notify The City Engineer Of The Situation Before Doing Any Work. The Completed Driveway Work Will Not Be Accepted If The Gutter Holds Water Due To Poor Construction By The Contractor.

5. It Is Recognized That This Driveway Detail Will Not Cover Every Possible Situation Encountered In Construction. Additional Expansion Joints Will Be Required As Needed.

6. Clean And Seal All Joints And Saw Cuts In Accordance With The Standard Specifications.

7. Curb Cuts Exceeding 40' Must Be Approved By The City Engineer.

SECTION A-A

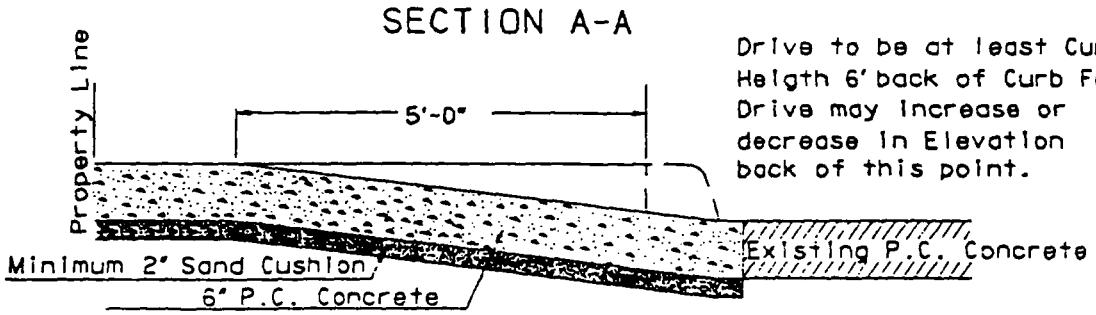

EXISTING PAVING

(This page intentionally left blank)

CHAPTER 4

REVOCABLE PERMIT FOR PARKING ON UNUSED PUBLIC RIGHT-OF-WAYS

Section 14-401 Revocable permit for parking on unused public right-of-ways.

SECTION 14-401 REVOCABLE PERMIT FOR PARKING ON UNUSED PUBLIC RIGHT-OF-WAYS.

A property owner may, upon written application, be granted a revocable permit for purposes of the accessory use of temporary vehicular parking on those portions of the public right-of-way which is not being used by the public or the City of Piedmont, and which abuts the property on which the principal use of applicant's property is located.

The area for which the revocable permit is sought shall not exceed the area of the right-of-way which would revert to the owner if the right-of-way was vacated under 11 Oklahoma Statutes, Section 43-113. The issuance of the revocable permit shall be effective only if approved by the City Council of the City of Piedmont, and then shall be revocable at will by the City of Piedmont when the City Council of the City of Piedmont determines that it is necessary or expedient that the right-of-way be utilized for public purposes. The property owner shall not be entitled to any reimbursement for improvements constructed on the right-of-way under this agreement when the City of Piedmont revokes the permit, and the revocable permit shall not authorize the construction of any permanent structures or buildings on the right-of-way. The City manager shall develop a form for the application and permit provided for in this section. A non-refundable fee of $20.00, shall be paid for each application.

CHAPTER 5

SIDEWALKS

ARTICLE A

PERMITS

Section 14-501	Permit Required.
Section 14-502	Application for permit.
Section 14-503	Fee.
Section 14-504	Submission of plans.
Section 14-505	Expiration, invalid permits, fee for commencing work without permit.
Section 14-507	-
Section 14-509	Reserved.

ARTICLE B

ENFORCEMENT

Section 14-510	Enforcement.
Section 14-511	Violations.
Section 14-512	-
Section 14-519	Reserved

ARTICLE C

SIDEWALK CONSTRUCTION STANDARTS

Section 14-520	Sidewalk construction standards.
Section 14-521	Maintenance of sidewalk and sidewalk area.

ARTICLE A

PERMITS

SECTION 14-501 PERMIT REQUIRED.

No person shall construct, alter, replace or repair any sidewalk, curb or driveway without a required permit issued by the City.

SECTION 14-502 APPLICATION FOR PERMIT.

A permit shall be issued pursuant to the provisions of this sub-section. To obtain a permit, the contractor or his authorized representative shall file with the Community Development Director the following items: a current application form, application fee as established in this sub-section, and a set of construction plans with appropriate specifications.

Said application form shall describe the abutting property adjacent to which the proposed work on public property is to be done, either by lot, block or tract and house number, location on the street or similar description. The application may require such other information as determined reasonably necessary by the City Engineer.

Any required approvals required by ODOT or any other law of this State shall be submitted for City Engineer review prior to issuance of the permit.

SECTION 14-503 FEE.

The fee for a required sidewalk in conjunction with the development of a residential use shall be $10.00. The fee for a required sidewalk in conjunction with a nonresidential use shall be $20.00. A permit submittal fee shall not be required for construction, alteration, replacement or repair of a sidewalk constructed to serve a tax exempt property. There shall be no permit fee charged for repair or replacement of an existing sidewalk.

SECTION 14-504 SUBMISSION OF PLANS.

For any new construction or any alteration to an existing sidewalk, two sets of plans shall be furnished by the applicant showing the location as to lot, size and placement of sidewalks and handicapped ramps, property lines, streets, easement locations and other related information as the building inspector may deem necessary.

All new Subdivision Plats and Planned Unit Developments must show proposed sidewalks on submitted plans including the drainage plans prior to City Council approval.

All sidewalk plans must be signed and executed by a Professional Engineer.

The repair or construction of any existing sidewalk must be performed by a qualified contractor and must be in conformance with Section 14-520 of this Ordinance. All repairs to any existing sidewalk require submission of plans to the building inspector.

SECTION 14-505 EXPIRATION, INVALID PERMITS, FEE FOR COMMENCING WORK WITHOUT PERMIT.

Each permit issued under this sub-section shall expire if the work is not commenced within six (6) months of the date of the permit or if the work authorized by the permit is suspended or abandoned after the expiration of the initial six-month period. An issued permit deemed in violation of this article shall not be considered as granting of any vested right, and upon discovery of any such violation of this article the permit shall be deemed to be null and void. Any work on a sidewalk that is found to have been started without a permit shall be charged ten times the amount of the permit fee.

SECTION 14-507 to SECTION 14-509 Reserved.

ARTICLE B

ENFORCEMENT

SECTION 14-510 ENFORCEMENT.

The provisions of this article shall be administered and enforced by the building inspector of the City, and for this purpose such inspector shall have enforcement powers.

SECTION 14-511 VIOLATIONS.

It shall be unlawful for any person not having a sidewalk permit to construct, alter, replace or repair any sidewalk as provided in this article.

It shall also be unlawful for any person to obstruct the right of way on any sidewalk.

The fine for violations of this ordinance, not otherwise stated, shall be the same as the current nuisance fines.

SECTION 14-512 to SECTION 14-519 Reserved.

ARTICLE C

SIDEWALK CONSTRUCTION STANDARDS

SECTION 14-520 SIDEWALK CONSTRUCTION STANDARDS.

A. The construction of any sidewalk not specifically outlined herein shall be designed and constructed in accordance with Piedmont Standards, Specifications and Standard Details (See, Piedmont DWG 700 City) which are hereby specifically adopted herein, along with Subchapter II of the American With Disabilities Act, 42 U.S.C. § 12131, et seq., as amended ("ADA"), and with any and all other applicable state and federal statutes. The Developer or Contractor, as the case may be, shall be solely responsible for compliance therewith. To maintain compliance with the American Disabilities Act Accessibility Guidelines (ADAAG), these requirements shall be modified in accordance with all subsequent amendments and revisions of the ADAAG requirements.

B. Sidewalk materials and construction shall conform to the Piedmont Standards, Specifications and Standard Details adopted herein and shall conform to the requirements of the American Society for Testing Materials, Serial D Designation C9-26, and all subsequent amendments and revisions.

C. When excavating for concrete sidewalks, construction shall comply with the design standards as outlined in this ordinance and the Piedmont standard details. Construction shall also comply with the Piedmont Drainage Ordinance.

D. All sidewalks shall be at least five feet in width. All sidewalks must be located in an area between the curb and one (1) foot from the property line, unless an alternate location is approved as part of a sidewalk plan. The location of sidewalks shall be designed so that their installation and alignment does not conflict with the location of utilizes. Sidewalks must be designed to be free of obstructions and must maintain the minimum width prescribed above. In cases of repair or replacement, all sidewalks shall be replaced to the existing sidewalk width, unless otherwise required by law.

SECTION 14-521 MAINTENANCE OF SIDEWALK AND SIDEWALK AREA.

It shall be the responsibility of the property owner to maintain, repair, and replace any sidewalk located on the owner's property. However, any sidewalk located on City property or any arterial street shall be maintained by the City.

If the sidewalk on any property becomes a hazard to persons using the sidewalk and the property owner fails to maintain, repair or replace such sidewalk after due notice and reasonable opportunity to remedy such hazard, the City shall have the right to repair or replace such hazardous sidewalk at its discretion. All costs of said repair or replacement shall be at the property owner's expense and shall be payable immediately upon completion of such repair/replacement. If said costs are not paid in full, the City shall have the right to file and maintain a lien against said property until such balance is paid in full.

PART 15

TRAFFIC AND VEHICLES

CHAPTER 1
GENERAL PROVISIONS

Section 15-101.	Citation.
Section 15-102.	Definitions.
Section 15-103.	Proof of liability insurance coverage.
Section 15-104.	Vehicle owner not to permit or authorize violation of law or this chapter.
Section 15-105.	Parent or guardian not to authorize or permit child or ward to violate chapter.
Section 15-106.	Adoption of state vehicle laws.
Section 15-107.	Jurisdiction.

CHAPTER 2
TRAFFIC-CONTROL DEVICES

Section 15-201.	Authority to install traffic-control devices.
Section 15-202.	Design and construction of traffic-control devices; manual of specifications.
Section 15-203.	Traffic signs required for enforcement.
Section 15-204.	Obedience to official traffic-control devices.
Section 15-205.	Traffic control signal legend.
Section 15-206.	Pedestrian-control signals.
Section 15-207.	Flashing signals.
Section 15-208.	Pedestrian-activated school crossing signals.
Section 15-209.	Display of unauthorized signs or signals.
Section 15-210.	Defacing or removing traffic-control devices.
Section 15-211.	Designation of crosswalks and safety zones.

CHAPTER 3
EQUIPMENT

Section 15-301.	Equipment required; use of equipment.
Section 15-302.	Muffler required; cutouts.
Section 15-303.	Width, height, length, weight and load.
Section 15-304.	Windshields to be unobstructed; wipers required.
Section 15-305.	Inspection of vehicles; safety stickers.
Section 15-306.	Vehicles to be registered; display of tags.

CHAPTER 4
CERTAIN VEHICLES PROHIBITED

Section 15-401.	Vehicles injurious to streets; metal tires prohibited.

Section 15-402 Obstructive and dangerous vehicles; covering of loads.
Section 15-403 Permit for vehicles with protruding parts on wheels.
Section 15-404 Deposit for glass, nails, or other injurious matter in streets; Responsibility to remove after accident.

CHAPTER 5

DRIVING, OVERTAKING, AND PASSING

Section 15-501 Driving on the right side of roadway; exception.
Section 15-502 Passing vehicles proceeding in opposite direction.
Section 15-503 Passing vehicle on left.
Section 15-504 Passing vehicle on right.
Section 15-505 Passing requirements, duty of overtaken vehicle.
Section 15-506 Passing prohibited.
Section 15-507 Designation of no-passing zones.
Section 15-508 School buses; markings; passing regulations.
Section 15-509 Driving on laned roadways, marking traffic lanes.
Section 15-510 Driving on divided highways.
Section 15-511 Following too closely.
Section 15-512 Restricted-access roadways.
Section 15-513 Driving trough service drives.
Section 15-514 Reckless driving.
Section 15-515 Careless or negligent driving.
Section 15-516 Driving over fire hose.
Section 15-517 Following fire or emergency apparatus.
Section 15-518 Procedure on approach of emergency vehicles.
Section 15-518.1 Driver of a motor vehicle approaching a stationary emergency vehicle.
Section 15-519 Actual physical control of vehicle while intoxicated.
Section 15-520 Driving under influence of intoxicating liquor or drugs; driving while impaired; evidence; penalty.
Section 15-520.1 Alcohol and drugs--person under 21 years of age.
Section 15-521 Driver's license required.
Section 15-522 Driving while license suspended; use of false license.
Section 15-523 Permitting unlicensed person to drive.
Section 15-524 Driving through funeral processions.
Section 15-525 Driving in funeral procession.
Section 15-526 Identification of funeral processions.
Section 15-527 Use of roller skates, coasters, skateboard on roadway.
Section 15-528 Play streets authorized.

Section 15-529	Use of play streets by motor vehicles.
Section 15-530	Obstructing intersection or crosswalk.
Section 15-531	Driving on sidewalk prohibited.
Section 15-532	Driving in public parks restricted, driving on property without permission.
Section 15-533	Starting stopped or parked vehicles.
Section 15-534	Backing of vehicle.
Section 15-535	Opening and closing vehicle door.
Section 15-536	Obstructions to driver's view; number in front seat.
Section 15-537	Clinging to vehicle.
Section 15-538	Boarding or alighting from moving vehicle.
Section 15-539	Riding outside vehicle compartment.
Section 15-540	Driving through safety zone.
Section 15-541	Child passenger restraint system or seat belt required; exceptions; penalty.
Section 15-542	Seat belts required for front seat passengers; exceptions.
Section 15-543	Obedience to signal indicating approach of train.
Section 15-544	Certain vehicles to stop at all railroad grade crossings.

CHAPTER 6

STOPPING, STANDING, AND PARKING

ARTICLE A

PARKING REGULATIONS

Section 15-601	Stopping, standing, or parking prohibited in certain places.
Section 15-602	Handicapped parking restrictions.
Section 15-603	Parking not to obstruct traffic or signs.
Section 15-604	Parking for certain purposes prohibited.
Section 15-605	Removing enforcement marking.
Section 15-606	Standing or parking on left side of roadway.
Section 15-607	Parking on private property; impounding of vehicle.
Section 15-608	Driving or parking on commercial business property between 6:00 P. M. and 6:00 A. M. restricted, signs.
Section 15-609	Parking more than twenty-four (24) hours.
Section 15-610	Unattended vehicles.

Section 15-611 Authority to restrict parking time.
Section 15-612 Parking in private parking spaces without permission of owner.
Section 15-613 Prohibiting parking within fire lanes on certain private property.
Section 15-614 Limiting parking to authorize emergency vehicles.
Section 15-615 Presumption in prosecutions for standing or parking violations.

ARTICLE B

MANNER OF PARKING

Section 15-620 Distance from curb.
Section 15-621 Brakes to be set; motor not to be running; securing animals.
Section 15-622 Angle parking.
Section 15-623 Parking within marked spaces.
Section 15-624 Parking to be such as to leave ten (10) feet of roadway available for traffic.
Section 15-625 Double parking prohibited.

CHAPTER 7

SPEED REGULATIONS

Section 15-701 Speed limits.
Section 15-702 Minimum speed.

CHAPTER 8

RIGHT-OF-WAY

Section 15-801 Right-of-way at intersections.
Section 15-802 Right-of-way at intersections, vehicles arriving at same time.
Section 15-803 Left turn lane.
Section 15-804 Designation of through streets.
Section 15-805 Signs at through streets.

Section 15-806 Determination of stop and yield intersections.
Section 15-807 Vehicles entering stop intersections.
Section 15-808 Vehicle entering yield intersection.
Section 15-809 School zones and crosswalks.
Section 15-810 Emerging from alley or driveway.
Section 15-811 Obstructing intersection or crosswalk.

CHAPTER 9

TURNING MOVEMENTS

Section 15-901 Method of turning generally and at intersections.
Section 15-902 Authority to place turning markers.
Section 15-903 Authority to restrict turning; obedience required.
Section 15-904 Limitations on turning, U-turns.
Section 15-905 turning or stopping movements; signals required.
Section 15-906 Signals, method required.
Section 15-907 Method of giving hand signals.

CHAPTER 10

ONE-WAY STREETS AND ALLEYS

Section 15-1001 Authority to designate one-way streets.
Section 15-1002 One-way streets; direction of traffic.
Section 15-1003 Rotary traffic islands.

CHAPTER 11

TRUCK ROUTES AND PARKING

Section 15-1101 Truck routes, map, multiple citations, impoundment.
Section 15-1102 permits required for operation on certain streets.

Section 15-1103 Truck parking restricted in residential subdivisions.
Section 15-1104 LPG restrictions.
Section 15-1105 Compliance with state law.
Section 15-1106 Trucks transporting flammable liquids, hazardous materials not to be left unattended more than 15 minutes.

CHAPTER 12

LOADING ZONES

Section 15-1201 Authority to designate curb loading zones.
Section 15-1202 Parking or standing in passenger loading zone restricted.
Section 15-1203 Standing or parking in freight loading zones.
Section 15-1204 permit to back to curb for loading or unloading.

CHAPTER 13

PUBLIC CARRIER STOPS

Section 15-1301 Authority to designate public carrier stops.
Section 15-1302 Bus stops; restrictions.
Section 15-1303 Taxi stands; loading passengers.
Section 15-1304 Restricted use of bus and taxicab stands.

CHAPTER 14

ACCIDENTS

Section 15-1401 Accidents involving death or personal injury.
Section 15-1402 Accidents involving damage to property.
Section 15-1403 Duty to give information and render aid.
Section 15-1404 Duty upon striking unattended vehicle.
Section 15-1405 Duty upon striking fixtures upon a highway.
Section 15-1406 Immediate notice of accident.

Section 15-1407 When driver unable to report.

CHAPTER 15

MOTORCYCLES

Section 15-1501 Operation of motorcycle.
Section 15-1502 Equipment required.
Section 15-1503 Headgear required.
Section 15-1504 License required.
Section 15-1510 Operation of mini-bikes, golf carts, all terrain vehicles, and utility vehicles on public streets.

CHAPTER 16

BICYCLES

Section 15-1601 Effects of regulations; parent's duty.
Section 15-1602 Applicability of traffic laws.
Section 15-1603 Obedience to traffic-control devices.
Section 15-1604 Manner of riding bicycle.
Section 15-1605 Riding on roads and bicycle paths.
Section 15-1606 Speed restrictions.
Section 15-1607 Carrying articles.
Section 15-1608 Parking.
Section 15-1609 Riding on sidewalk prohibited.
Section 15-1610 Lights and brakes.
Section 15-1611 Rider not to cling to other vehicles.
Section 15-1612 Signal devices.
Section 15-1613 Emerging from alley, driveway, or building.
Section 15-1614 Dealers to report.
Section 15-1615 Penalty.

CHAPTER 17

PEDESTRIANS

Section 15-1701	Subject to traffic-control signals.
Section 15-1702	Right-of-way at crosswalks.
Section 15-1703	Pedestrians to use right half of crosswalk.
Section 15-1704	Crossing at right angles.
Section 15-1705	When pedestrians shall yield.
Section 15-1706	Prohibited crossing.
Section 15-1707	Obedience to railroad signals.
Section 15-1708	Walking along roadway.
Section 15-1709	Hitchhiking; soliciting business.
Section 15-1710	Drivers to exercise care.
Section 15-1711	Playing in streets.
Section 15-1712	Use of white cane; special provisions for blind pedestrians.

CHAPTER 18

ENFORCEMENT

Section 15-1801	Authority of police and fire officials.
Section 15-1802	Authority to direct traffic.
Section 15-1803	Emergency and experimental regulations.
Section 15-1804	Obedience to police and fire officials required.
Section 15-1805	Applicability to public employees.
Section 15-1806	Authorized emergency vehicles.
Section 15-1807	Persons working on streets exempted.
Section 15-1808	Closing streets for repairs; barricades required; use of street restricted.
Section 15-1809	Riding animals and animal-drawn vehicles.
Section 15-1810	Notification of runs by emergency vehicles.

CHAPTER 19

IMPOUNDMENT PROCEDURES

Section 15-1901.	Purpose and effect.
Section 15-1902.	Authority to impound vehicles.
Section 15-1903.	Derelict/Disabled vehicles.
Section 15-1904.	Vehicles on bridges.
Section 15-1905.	Vehicles constituting traffic hazards.
Section 15-1906.	Illegal trespass.
Section 15-1907.	Vehicles parked in a prohibited zone.
Section 15-1908.	Vehicles blocking exits or fire hydrants.
Section 15-1909.	Vehicles parked in intersections.
Section 15-1910.	Stolen vehicles; recovery by police.
Section 15-1911.	Arrest and detention of driver.
Section 15-1912.	Place of impoundment.
Section 15-1913.	Impoundment.
Section 15-1914.	Seized and impounded vehicle storage.
Section 15-1915.	Duration; release; impound fee.
Section 15-1916.	Redemption of impounded vehicle.
Section 15-1917.	Penalty.

CHAPTER 20

PENALTIES AND ARREST PROCEDURES

Section 15-2001.	Penalty.
Section 15-2001.1	Increased fines under certain circumstances.
Section 15-2002.	Citation tags on parked vehicles.

(This page intentionally left blank)

CHAPTER 1
GENERAL PROVISIONS

Section 15-101.	Citation.
Section 15-102.	Definitions.
Section 15-103.	Proof of liability insurance coverage.
Section 15-104.	Vehicle owner not to permit or authorize violation of law or this chapter.
Section 15-105.	Parent or guardian or to authorize or permit child or ward to violate chapter.
Section 15-106.	Adoption of state vehicle laws.
Section 15-107.	Jurisdiction.

SECTION 15-101. CITATION.

This part shall be known and may be cited as the City's traffic code. (Prior Code, Chapter 20)

SECTION 15-102. DEFINITIONS.

As used in this chapter the following terms shall have the meanings respectively ascribed to them in this section:

1.. "Alley" means any narrow public passageway or street ordinarily located in the interior portion of platted blocks, having no legal or official name other than alley, as herein defined, and ordinarily open to traffic and used for service or delivery purposes to the rear of stores, dwellings, or buildings.

2. "Arterial street" means any U.S. or state numbered route, controlled-access highway or other major radial or circumferential street or highway designated by local authorities within their respective jurisdictions as part of a major arterial system of streets or highway.

3. "Authorized emergency vehicle" means a vehicle of the fire department, police department, or other law enforcement agencies, state and national, ambulances, and such other emergency vehicle or municipal departments or public service corporations as are authorized by the Chief of Police, and all of which are equipped with sirens and with red lights displayed openly on the front when engaged in emergency runs.

4. "Bicycle" means every device propelled by human power upon which any person may ride, having two (2) tandem wheels.

5. "Boulevard" or "through street" means any street or highway, or portion thereof, designated by ordinances of the City which require vehicles to come to a full and complete stop before entering such street or highway from intersecting streets or highways.

6. "Bus" means every motor vehicle designed for carrying more than ten (10) passengers and used for the transpiration of persons, and every motor vehicle, other than a taxicab, designed

65. "Vehicle" means every device in, upon, or by which any person or property is or may be transported or drawn upon a highway, except devices moved by human power or used exclusively upon stationary rails or tracks; and,

66. "Yield" means the yielding of the right-of-way to all vehicles or pedestrians approaching from the right or left intersecting street which are so close as to constitute an immediate hazard. (Prior Code, Chapter 20)

SECTION 15-103. PROOF OF LIABILITY INSURANCE COVERAGE.

A. Every owner of a motor vehicle registered in the state shall carry in a vehicle, at all times, a current and valid owner's security verification form, as defined in 47 O.S. § 7-601, et. seq., listing the vehicle or a current and valid equivalent form which has been issued by the Department of Public Safety, which shall be produced by any driver thereof upon request for inspection by any law enforcement officer, and in case of collision, the form shall be shown upon request to any person affected by the collision.

B. Every operator of a motor vehicle registered in the state shall, while operating or using the vehicle, carry either a current and valid operator's or a current and valid owner's verification form, as defined in 47 O.S. § 7-601.1, issued by an insurance carrier, providing the operator is not excluded from coverage thereon, or an equivalent form issued by the Department of Public Safety reflecting liability coverage.

C. The following shall not be required to carry an owner's or operator's security verification form or an equivalent form issued by the Department of Public Safety:

(1) Any vehicle owned or leased by the federal or state government or any agency or political subdivision thereof;

(2) Any vehicle bearing the name, symbol or logo of the business, corporation or utility on the exterior, and which is in compliance with the Compulsory Insurance Law according to the records of the Department of Public Safety, which reflect a deposit, bond, self-insurance or fleet policy;

(3) Any vehicle authorized for operation under a permit number issued by the Interstate Commerce Commission or State Corporation Commission;

(4) Any licensed taxicab; and

(5) Any vehicle owned by a licensed used motor vehicle dealer.

D. (1) Any owner or operator who fails to produce for inspection a valid and current security verification form or equivalent form which has been issued by the Department of Public Safety upon request of any police officer, or other authorized person, shall be guilty of an offense.

(2) Any person producing proof in Court that a current security verification form or equivalent form, which has been issued by the Department of Public Safety, reflecting

liability coverage for the person was in force at the time of the alleged offense, shall be entitled to dismissal of the charge upon payment of court costs.

E. A police officer, to establish compliance with the Compulsory Insurance Law during a traffic stop or accident investigation, shall access information from the online verification system to verify the current validity of the policy described on a security verification form produced by the operator of ~~a~~ each motor vehicle during the traffic stop or accident investigation. If compliance is not confirmed for the policy described on the security verification form produced by the operator and a subsequent investigation conducted by the officer verifies that the operator is not in compliance or if no security verification form is produced, the officer shall issue a citation to the operator for failure to comply with the Compulsory Insurance Law. Establishing compliance with the Compulsory Insurance Law through the online verification system shall not be the primary cause for law enforcement to stop a motor vehicle; and

F. Any law enforcement officer who has been notified that the driving privilege of a person has been suspended, upon observing the person or motor vehicle anywhere upon a public street, highway, roadway, turnpike, or public parking lot, may stop the person or motor vehicle , seize the driver license of the person, seize the vehicle being operated by the person and cause the vehicle to be towed and stored as provided in Chapter 19 of this title, if the officer has probable cause to believe that the vehicle is not insured as required by the Compulsory Insurance Law of this state.

G. An owner or operator who fails to comply with the Compulsory Insurance Law, or who fails to produce for inspection a valid and current security verification form or equivalent form which has been issued by the Department of Public Safety upon request of any peace officer, representative of the Department of Public Safety or other authorized person, shall be guilty of a misdemeanor and upon conviction shall be subject to a fine of not more than Two Hundred Fifty Dollars ($250.00), or imprisonment for not more than thirty (30) days, or by both such fine and imprisonment. Upon issuing a citation under this Section, the officer issuing the citation may seize the vehicle being operated by the person and cause the vehicle to be towed and stored as provided by subsection B of Section 955 of this title, if the officer has probable cause to believe that the vehicle is not insured as required by the Compulsory Insurance Law of this state. If the operator of the vehicle produces what appears to be a valid security verification form and the officer is unable to confirm compliance through the online verification system or noncompliance by a subsequent investigation, the officer shall be prohibited from seizing the vehicle and causing such vehicle to be towed and stored. Further, no vehicle shall be seized and towed under the provisions of this paragraph if said vehicle is displaying a temporary license plate that has not expired pursuant to the provisions of Sections 1137.1 and 1137.3 of Title 47 Oklahoma Statutes.

H. An owner other than an owner of an antique or a classic automobile as defined by the Oklahoma Tax Commission who files an affidavit that a vehicle shall not be driven upon the public highways or public streets, pursuant to Section 7-607 of 47 Oklahoma Statutes, who drives or permits the driving of the vehicle upon the public highways or public streets, shall be guilty of a misdemeanor and upon conviction thereof

shall be subject to a fine of not more than Five Hundred Dollars ($500.00), or imprisonment for not more than thirty (30) days, or by both such fine and imprisonment.

I. A sentence imposed for any violation of the Compulsory Insurance Law may be suspended or deferred in whole or in part by the court.

J. Any person producing proof in court that a current security verification form or equivalent form which has been issued by the Department of Public Safety reflecting liability coverage for the person was in force at the time of the alleged offense shall be entitled to dismissal of the charge upon payment of court costs; however, if proof of security verification is presented to the court by the assigned court appearance date, the court shall access information from the online verification system and, if compliance is confirmed, the charge shall be dismissed without payment of court costs.

K. Upon conviction, bond forfeiture or deferral of sentence, the court clerk shall forward an abstract to the Department of Public Safety within ten (10) days reflecting the action taken by the court.

SECTION 15-104. VEHICLE OWNER NOT TO PERMIT OR AUTHORIZE VIOLATION OF LAW OR THIS CHAPTER.

It is lawful for any person to authorize or knowingly permit a motor vehicle owned by him, or under his control, to be driven upon any street in the City by any person who is not authorized to drive a motor vehicle under the laws of the State, or to be driven or to stand or to be parked in violation of any portions of this chapter. (Prior Code, Chapter 20)

SECTION 15-105. PARENT OR GUARDIAN NOT TO AUTHORIZE OR PERMIT CHILD OR WARD TO VIOLATE CHAPTER.

It is unlawful for a parent of a child or the guardian of a ward to authorize or knowingly permit any such child or ward to violate any provision of this chapter. (Prior Code, Chapter 20)

SECTION 15-106. ADOPTION OF STATE VEHICLE LAWS.

There is hereby adopted and incorporated herein by reference the provisions of the State Highway Safety Code, Sections 1-101 et seq. of Title 47 of the Oklahoma Statutes, and the State Rules of the Road, Sections 11-101 et seq. of Title 47 of the Oklahoma Statutes, and all other non-felony motor vehicle violations of Title 47 of the Oklahoma Statutes, as now exist and as may be from time to time amended. Such state laws as adopted hereby in reference shall be fully enforceable by the City within the City limits as fully as if set out at length herein, punishable as provided in Section 1-108 of this code. (Prior Code, Chapter 20; . No. 308, 7/27/92).

SECTION 15-107. JURISDICTION.

The provisions of this chapter shall apply and be enforced on all roads, streets, and highways within the City and on all roads, streets and highways forming the boundary lines of the City. (Ord. No. 282, 1/22/90)

BLANK

PAGES 15-13 THROUGH 15-17 INTENTIONALLY LEFT BLANK

No page 18

CHAPTER 2

TRAFFIC-CONTROL DEVICES

Section 15-201	Authority to install traffic-control devices.
Section 15-202	Design and construction of traffic-control devices; manual of specifications.
Section 15-203	Traffic signs required for enforcement.
Section 15-204	Obedience to official traffic-control devices.
Section 15-205	Traffic control signal legend.
Section 15-206	Pedestrian-control signals.
Section 15-207	Flashing signals.
Section 15-208	Pedestrian-activated school crossing signals.
Section 15-209	Display of unauthorized signs or signals.
Section 15-210	Defacing or removing traffic-control devices.
Section 15-211	Designation of crosswalks and safety zones.

SECTION 15-201 AUTHORITY TO INSTALL TRAFFIC- CONTROL DEVICES.

The city administrator, subject to direction of the council, shall have placed and maintained traffic-control signs, signals and devices when and as required under the traffic ordinances of this city to make effective the provisions of such ordinances, and may have placed and maintained such additional traffic-control signs, signals and devices as it may deem necessary to regulate traffic under the traffic ordinances of this city or under state law or to guide or warn traffic. The city administrator may have traffic-control devices tested under actual conditions of traffic. (Prior Code, Chapter 20)

State Law References: Traffic-control devices generally, 47 O.S. Secs. 11-201 et seq.; power of city to maintain traffic-control devices, 47 O.S. Sec. 16-106.

SECTION 15-202 DESIGN AND CONSTRUCTION OF TRAFFIC-CONTROL DEVICES; MANUAL OF SPECIFICATIONS.

All traffic-control signs, signals and devices shall conform to the latest edition of the "Manual on Uniform Traffic Control Devices for Streets and Highways" as published by the Oklahoma Department of Transportation, All signs and signals required hereunder for a particular purpose shall so far as practicable be uniform as to type and location throughout the city. All traffic-control devices so erected and not inconsistent with the provisions of state law or this chapter shall be official traffic-control devices. (Prior Code, Chapter 20)

State Law Reference: Uniform manual adopted by state, state approval required on state highways, 47 O.S. Secs. 15-104 to 15-106.

SECTION 15-203 TRAFFIC SIGNS REQUIRED FOR ENFORCEMENT.

No provision of this chapter for which signs are required shall be enforced against an alleged violator if at the time and place of the alleged violation an official sign was not in proper position and sufficiently legible to be seen by an ordinarily observant person. Whenever a particular section does not state that signs are required, such section shall be effective even though no signs are erected or in place. (Prior Code, Chapter 20)

SECTION 15-204 OBEDIENCE TO OFFICIAL TRAFFIC- CONTROL DEVICES.

The driver of any vehicle shall obey the instructions of any official traffic-control device unless otherwise directed by a police officer, subject to the exceptions granted in this chapter to the driver of an authorized emergency vehicle. (Prior Code, Chapter 20)

SECTION 15-205 TRAFFIC CONTROL SIGNAL LEGEND.

Whenever traffic is controlled by traffic-control signals exhibiting the word "Go," "Caution" or "Stop," or exhibiting different colored lights successively one at a time, or with arrows, the following colors only shall be used, and the terms and lights shall indicate and apply to drivers of vehicles and pedestrians as follows:

1. Green alone or "Go":

   a. Vehicular traffic facing the signal may proceed straight through or turn right or left unless a sign or barricade at such place prohibits either such turn. But vehicular traffic, including vehicles turning right or left, shall yield the right-of-way to other vehicles and to pedestrians lawfully within the intersection or an adjacent crosswalk at the time such signal is exhibited; and

   b. Pedestrians facing the signal may proceed across the roadway within any marked or unmarked crosswalk;

2. Steady yellow alone:

   a. Vehicular traffic facing the signal is thereby warned that the red or "Stop" signal will be exhibited immediately thereafter, and such vehicular traffic shall not enter or be crossing the intersection when the red or "Stop" signal is exhibited; and

   b. Pedestrians facing such signal are thereby advised that there is sufficient time to cross the roadway, and any pedestrian then starting to cross shall yield right-of-way to all vehicles;

3. Steady red alone or "Stop":

   a. Vehicular traffic facing the signal shall stop before entering the crosswalk on the near side of the intersection or, if none, then before entering the intersection, and shall remain standing until green or "Go" is shown alone. However, vehicles in the right traffic lane after making a stop as above required may enter the intersection cautiously and make a right turn unless "No Turn on Red" signs are posted to prohibit right turns; but such vehicle shall yield the right-of-way to any pedestrian or other traffic in the intersection, and such turn shall not be made so as to interfere with traffic proceeding on a green signal indication on the cross street; and

   b. No pedestrian facing such signal shall enter the roadway until the green or "Go" is shown alone or until authorized so to do by a pedestrian "Walk" signal; and

4. Steady red with green arrow:

a. Vehicular traffic facing such signal may cautiously enter the intersection only to make the movement indicated by such arrow, but shall yield the right-of-way to pedestrians lawfully within a crosswalk and to other traffic lawfully using the intersection;

b. No pedestrian facing such signal shall enter the roadway until the green or "Go" is shown alone or until authorized so to do by pedestrian "Walk" signal; and

c. In the event an official traffic-control signal is erected and maintained at a place other than an intersection, the provisions of this section shall be applicable except as to those provisions which by their nature can have no application. Any stop required shall be made at a sign or marking on the pavement indicating where the stop shall be made. In the absence of any such sign or marking, the stop shall be made at the signal.

(Prior Code, Chapter 20)

State Law References: Obeying traffic-control devices, 47 O.S. Sec. 11-201; Signal legend, 47 O.S. Sec. 11-202.

SECTION 15-206 PEDESTRIAN-CONTROL SIGNALS.

Whenever special pedestrian-control signals exhibiting the term "Walk" or "Wait" or "Don't Walk" are in place, such signals shall indicate as follows:

1. Walk: Pedestrians facing such signal may proceed across the roadway in the direction of the signal and shall be given the right-of-way by the drivers of all vehicles; and

2. Wait, Don't Walk: No pedestrian shall start to cross the roadway in the direction of such signal, but any pedestrian who has partially completed his crossing on the "Walk" signal shall proceed to a sidewalk or safety island while the "Wait" signal is showing.

(Prior Code, Chapter 20)

SECTION 15-207 FLASHING SIGNALS.

A. Whenever an illuminated flashing red or yellow signal is used in a traffic sign or signal, it shall require obedience by vehicular traffic as follows:

1. Flashing red (stop signal): When a red lens is illuminated with rapid intermittent flashes, drivers of vehicles shall stop before entering the nearest crosswalk at an intersection or at a limit line when marked, or, if none, than before entering the intersection. The right to proceed shall be subject to the rules applicable after making a stop at a stop sign; and

2. Flashing yellow (caution signal): When a yellow lens is illuminated with rapid intermittent flashes, drivers of vehicles may proceed through the intersection or past such signal only with caution.

B. This section shall not apply at railroad grade crossings. (Prior Code, Chapter 20)

SECTION 15-208 PEDESTRIAN-ACTIVATED SCHOOL CROSSING SIGNALS.

Whenever a pedestrian-actuated school crossing signal is provided, it requires obedience by vehicular traffic and pedestrians as follows:

1. Flashing yellow:

   a. When a yellow lens is illuminated with rapid intermittent flashes, drivers or operators of vehicles may proceed through the intersection or past such signal only with caution; and

   b. Pedestrians shall not proceed in conflict with traffic, but may actuate the signal-control switch, and shall wait until steady red alone is shown before entering the roadway or intersection controlled by the signal;

2. Steady yellow alone:

   a. Vehicular traffic facing the signal is thereby warned that the red or "Stop" signal will be exhibited immediately thereafter, and such vehicular traffic shall not enter or be crossing the intersection or past the signal when the red or "Stop" signal is exhibited; and

   b. No pedestrian shall enter the roadway or intersection on which the signal controls vehicular traffic until steady red alone is shown;

3. Steady red:

   a. Vehicular traffic facing the signal shall stop before entering the crosswalk on the near side of the intersection, or, if none, then before passing the signal or entering the intersection, and shall remain standing until flashing yellow is shown alone; and

   b. Pedestrians may proceed across the road controlled by the signal, and shall be given the right-of-way by the drivers of all vehicles; and

4. Steady red and steady yellow combined:

   a. Vehicular traffic facing the signal is thereby warned that the flashing yellow signal will be exhibited immediately thereafter, and that such vehicular traffic shall remain standing until the flashing yellow is shown alone; and

   b. Pedestrians are thereby warned that the flashing yellow signal is about to be shown, and shall not enter the signal-controlled roadway or intersection, or in a direction which conflicts with the movement of vehicular traffic; but any pedestrian who has partially completed his crossing shall proceed to the nearest sidewalk or safety island and shall be given the right-of-way by the drivers of all vehicles.

(Prior Code, Chapter 20)

SECTION 15-209 DISPLAY OF UNAUTHORIZED SIGNS OR SIGNALS.

A. No person shall place, maintain or display upon or in view of any highway an unauthorized sign, signal, marking or device which purports to be or is an imitation of or resembles an official traffic-control device or railroad sign or signal, which attempts to direct the movement of traffic which projects any flashing or revolving beams of light, or which hides from view or interferes with the effectiveness of any official traffic-control device or any railroad sign or signal.

B. No person shall place or maintain nor shall any public authority permit upon any highway any traffic sign, signal or device bearing thereon any commercial or other advertising.

C. This section shall not prohibit the erection upon private property adjacent to highways of signs giving useful directional information and of a type that cannot be mistaken for official signs.

D. No sign or advertising shall be placed in a street right-of-way except official signs or devices placed by authority of this code or state law.

E. Every such prohibited sign, signal, marking or device is declared to be unlawful and a public nuisance; the city is empowered to remove the same without notice. (New)

Cross Reference: See also Section 14-111 of this code on signs in the right of way.

SECTION 15-210 DEFACING OR REMOVING TRAFFIC- CONTROL DEVICES.

No person shall, without lawful authority, attempt to or in fact alter, deface, injure, knock down, change the position of or remove any official traffic-control device or any railroad sign or signal or any inscription, shield or insignia thereon, or any other part thereof. (Prior Code, Chapter 20)

Cross Reference: See also Part 10 on removal of barricades.

SECTION 15-211 DESIGNATION OF CROSSWALKS AND SAFETY ZONES.

The city administrator, subject to direction by the council, is authorized to:

1. Designate and have maintained by appropriate devices, marks or lines upon the surface of the roadway crosswalks at intersections where in his opinion there is particular danger to pedestrians crossing the roadway, and at such other places as he may deem necessary; and

2. Establish safety zones or islands of such kind and character and at such places as he may deem necessary for the protection of pedestrians.

(Prior Code, Chapter 20)

CHAPTER 3

EQUIPMENT

Section 15-301 Equipment required; use of equipment.
Section 15-302 Muffler required; cutouts.
Section 15-303 Width, height, length, weight and load.
Section 15-304 Windshields to be unobstructed; wipers required.
Section 15-305 Inspection of vehicles; safety stickers.
Section 15-306 Vehicles to be registered; display of tags.

SECTION 15-301 EQUIPMENT REQUIRED; USE OF EQUIPMENT.

A. Every vehicle operated upon the streets of the city shall be equipped as required by Title 47 of the Oklahoma Statutes. No person shall operate a vehicle upon a street of the city which is not equipped as required by state law.

B. No person shall fail to use such equipment in the manner required by the state law, or use it in a manner prohibited by state law. (Prior Code, Chapter 20)

State Law Reference: Equipment required on vehicles, 47 O.S. Secs. 131 et seq.

SECTION 15-302 MUFFLER REQUIRED; CUTOUTS.

Every motor vehicle shall at all times be equipped with a muffler in good working order and in constant operation to prevent excessive or unusual noise. No person shall use a muffler cutout, bypass or similar device upon a motor vehicle on a highway. No person shall modify the exhaust system of a motor vehicle in any manner which will amplify or increase the noise or sound emitted louder than that emitted by the muffler originally installed on the vehicle. (Prior Code, Chapter 20)

State Law Reference: Similar Provisions, 47 O.S., Sec. 12-402.

SECTION 15-303 WIDTH, HEIGHT, LENGTH, WEIGHT AND LOAD.

No person shall drive or convey through any street or bridge any vehicle the width, height, length, weight or load of which exceeds that authorized by state law, or which vehicle exceeds the width, height, length, weight or load limits established by the city, county or state as indicated by appropriate signs erected on the street, road or bridge. (Prior Code, Chapter 20)

SECTION 15-304 WINDSHIELDS TO BE UNOBSTRUCTED; WIPERS REQUIRED.

A. No person shall drive any motor vehicle with any sign, poster or other nontransparent material upon the front windshield, side wings or side or rear windows of such vehicle which obstructs the driver's clear view of the street or highway or any intersecting street or highway.

B. The windshield on every motor vehicle shall be equipped with a device for cleaning rain, snow or other moisture from the windshield. Such device shall be so constructed as to be controlled or operated by the driver of the vehicle. Every windshield wiper upon a motor vehicle

shall be maintained in good working order. (Prior Code, Chapter 20)

SECTION 15-305 INSPECTION OF VEHICLES; SAFETY STICKERS.

A. Police officers shall have authority to inspect and test any vehicle upon the streets of the city at any time to determine whether it is safe, whether it is properly equipped, or whether its equipment is in proper adjustment and repair.

B. It is unlawful for any person to operate a motor vehicle on, over or along the streets of the city without a valid and current safety inspection sticker, as required by state law, in the lower left-hand corner of the windshield. (Prior Code, Chapter 20)

State Law Reference: State officers may inspect vehicles, 47 O.S. Secs. 13-102, 13-103; Inspection of vehicles required, 47 O.S. Sec. 851.

SECTION 15-306 VEHICLES TO BE REGISTERED; DISPLAY OF TAGS.

A. No person shall operate a vehicle of any kind upon a street of the city without a state vehicle license or tag as may be required by law.

B. No person shall fail to display the state vehicle license or tag as required by law or attach any trailer hitch or other device in a manner as to cover or partially cover the vehicle license. (Prior Code, Chapter 20)

CHAPTER 4

CERTAIN VEHICLES PROHIBITED

Section 15-401 Vehicles injurious to streets; metal tires prohibited.
Section 15-402 Obstructive and dangerous vehicles; covering of loads.
Section 15-403 Permit for vehicles with protruding parts on wheels.
Section 15-404 Deposit of glass, nails or other injurious matter in streets; responsibility to remove after accident.

SECTION 15-401 VEHICLES INJURIOUS TO STREETS; METAL TIRES PROHIBITED.

No vehicle or object which injures or is likely to injure the surface of a street shall be driven or moved on any street. Vehicles equipped with metal tires or lugs are specifically prohibited. (Prior Code, Chapter 20)

SECTION 15-402 OBSTRUCTIVE AND DANGEROUS VEHICLES; COVERING OF LOADS.

A. No person shall drive any vehicle in such condition, so constructed, or so loaded as to cause delay or be likely to cause delay in traffic, or as to constitute a hazard to persons or property, except by permit issued by the city and in accordance with the terms of such permit.

B. No vehicle shall be driven or moved on any street unless such vehicle is so constructed or loaded as to prevent any of its load from dropping, sifting, leaking, blowing or otherwise escaping therefrom, except that sand may be dropped for the purpose of securing traction or water or other substances may be sprinkled on a roadway in cleaning or maintaining such roadway.

C. No person shall operate on any street any vehicle with any load unless the load and any covering thereon is securely fastened so as to prevent the covering or load from becoming loose, detached or in any manner a hazard to other users of the highway. Any vehicle loaded with sand, cinders or other loose materials susceptible to blowing or escaping by reason of wind shall have such load covered or dampened so as to prevent the blowing or escaping of the load from the vehicle.

D. This section shall not apply to trucks loaded with livestock, poultry or agricultural products only, except baled agricultural products; however, any such trucks shall be so constructed or loaded as to prevent such livestock or poultry from escaping therefrom. (Prior Code,Chap. 20)

SECTION 15-403 PERMIT FOR VEHICLES WITH PROTRUDING PARTS ON WHEELS.

It is unlawful for any person to drive, pull or move, otherwise than by hauling, upon the paved streets of the city, any tractor or other vehicle with lugs, flanges or other protruding parts upon the surface of the wheels of the same, without first obtaining a written permit from the city engineer. Such permit shall not be granted unless all lugs, flanges or other protruding parts upon the surface of the wheels are first removed, or unless a base or board way is laid upon the paved street for the wheels of such vehicle to run upon so as to keep the wheels from coming in contact with the pavement and so as to entirely protect the pavement from the wheels. (Prior Code, Chapter 20)

SECTION 15-404 DEPOSIT OF GLASS, NAILS OR OTHER INJURIOUS MATTER IN STREETS: RESPONSIBILITY TO REMOVE AFTER ACCIDENT.

A. It shall be unlawful for any person to place, or cause to be placed, or let fall and remain, in or upon any street, any scrap iron, nail, tack, glass or other thing which is likely to injure persons or damage property, or to render a street unsafe for traffic.

B. Any person removing a wrecked or damaged vehicle from a street shall remove any glass or other injurious substance dropped upon the street from such vehicle. (Prior Code, Chapter 20)

State Law Reference: Similar provisions, 47 O.S., Sec. 11-1110(a)(c).

Cross Reference: Accidents, see Sec. 15-1401 of this code.

CHAPTER 5

DRIVING, OVERTAKING AND PASSING

Section 15-501	Driving on right side of roadway; exception.
Section 15-502	Passing vehicles proceeding in opposite direction.
Section 15-503	Passing vehicle on left.
Section 15-504	Passing vehicle on right.
Section 15-505	Passing requirements, duty of overtaken vehicle.
Section 15-506	Passing prohibited.
Section 15-507	Designation of no-passing zones.
Section 15-508	School buses; markings; passing regulations.
Section 15-509	Driving on laned roadways, marking traffic lanes.
Section 15-510	Driving on divided highways.
Section 15-511	Following too closely.
Section 15-512	Restricted-access roadways.
Section 15-513	Driving through service drives.
Section 15-514	Reckless driving.
Section 15-515	Careless or negligent driving.
Section 15-516	Driving over fire hose.
Section 15-517	Following fire or emergency apparatus.
Section 15-518	Procedure on approach of emergency vehicles.
Section 15-518.1	Driver of a motor vehicle approaching a stationary emergency vehicle.
Section 15-519	Actual physical control of vehicle while intoxicated.
Section 15-520	Driving under the influence of intoxicating liquor or drugs; driving while impaired; evidence; penalty.
Section 15-520.1	Alcohol and drugs – person under 21 years of age.
Section 15-521	Driver's license required.
Section 15-522	Driving while license suspended; use of false license.
Section 15-523	Permitting unlicensed person to drive.
Section 15-524	Driving through funeral processions.
Section 15-525	Driving in funeral procession.
Section 15-526	Identification of funeral processions.
Section 15-527	Use of roller skates, coasters, skateboards on roadway.
Section 15-528	Play streets authorized.
Section 15-529	Use of play streets by motor vehicles.
Section 15-530	Obstructing intersection or crosswalk.
Section 15-531	Driving on sidewalk prohibited.
Section 15-532	Driving in public parks restricted, driving without permission.
Section 15-533	Starting stopped or parked vehicles.
Section 15-534	Backing of vehicle.
Section 15-535	Opening and closing vehicle door.
Section 15-536	Obstructions to driver's view; number in front seat.
Section 15-537	Clinging to vehicle.
Section 15-538	Boarding or alighting from moving vehicle.
Section 15-539	Riding outside vehicle compartment.
Section 15-540	Driving through safety zone.
Section 15-541	Child passenger restraint system or seat belt required; exceptions; penalty.
Section 15-542	Seat belts required for front seat passengers; exceptions.
Section 15-543	Obedience to signal indicating approach of train.
Section 15-544	Certain vehicles to stop at all railroad grade crossings.

SECTION 15-501 DRIVING ON RIGHT SIDE OF ROADWAY; EXCEPTION.

A. Upon all roadways of sufficient width, a vehicle shall be driven upon the right half of the roadway except as follows:

1. When overtaking and passing another vehicle proceeding in the same direction under the rules governing such movement;

2. When the right half of a roadway is closed to traffic while under construction or repair;

3. Upon a roadway divided into three (3) marked lanes for traffic under the rules applicable thereon; and

4. Upon a roadway designated and sign-posted for one-way traffic.

B. Upon all roadways, any vehicle proceeding at less than the normal speed of traffic at the time and place and under the conditions then existing shall be driven in the right-hand lane when available to traffic, or as close as practicable to the right-hand curb or edge of the roadway, except when overtaking and passing another vehicle proceeding in the same direction or when preparing for a left turn at an intersection or into a private road or driveway. (Prior Code, Chapter 20)

State Law Reference: Driving and passing regulations, 47 O.S. Secs. 11-301 et seq.

SECTION 15-502 PASSING VEHICLES PROCEEDING IN OPPOSITE DIRECTION.

Drivers of vehicles proceeding in opposite directions shall pass each other to the right. Upon roadways having width for not more than one line of traffic in each direction, each driver shall give to the other at least one-half of the traveled portion of the roadway as nearly as possible. (Prior Code, Chapter 20)

SECTION 15-503 PASSING VEHICLE ON LEFT.

The following rules shall govern the overtaking and passing of vehicles proceeding in the same direction, subject to those limitations, exceptions and special rules hereinafter stated:

1. The driver of a vehicle overtaking another vehicle proceeding in the same direction shall pass to the left thereof at a safe distance and shall not again drive to the right side of the roadway until safely clear of the overtaken vehicle; and

2. Except when overtaking and passing on the right is permitted, the driver of an overtaken vehicle shall give way to the right in favor of the overtaking vehicle on audible signal and shall not increase the speed of his vehicle until completely passed by the overtaking vehicle. (Prior Code, Chapter 20)

SECTION 15-504 PASSING VEHICLE ON RIGHT.

A. The driver of a vehicle may overtake and pass upon the right of another vehicle only under the following conditions:

1. When the vehicle overtaken is making or about to make a left turn and has so properly signaled for a left turn;

2. Upon a street or highway with unobstructed pavement not occupied by parked vehicles and marked with lines for two (2) or more lanes of traffic in each direction; and

3. Upon a one-way street or upon any roadway on which traffic is restricted to one direction of movement, where the roadway is free from obstructions and of sufficient width for two (2) more lines of moving vehicles.

B. The driver of a vehicle may overtake and pass another vehicle upon the right only under conditions permitting such movement in safety. In no event shall such movement be made by driving off the pavement or main-traveled portion of the roadway. (Prior Code, Chapter 20)

SECTION 15-505 PASSING REQUIREMENTS, DUTY OF OVERTAKEN VEHICLE.

A. No vehicle shall be driven to the left side of the center of the roadway in overtaking and passing another vehicle proceeding in the same direction unless such left side is clearly visible and is free of oncoming traffic for a sufficient distance ahead to permit such overtaking and passing to be completely made without interfering with the safe operation of any vehicle approaching from the opposite direction or any vehicle overtaken. The overtaking vehicle must return to the roadway before coming within one hundred (100) feet of any vehicle approaching from the opposite direction.

B. Except as provided elsewhere in this chapter, the driver of a vehicle overtaking another vehicle proceeding in the same direction shall pass to the left thereof at a safe distance, and shall not again drive to the right side of the roadway until safely clear of the overtaken vehicle.

C. Every driver who intends to pass another vehicle proceeding in the same direction, which requires movement of his vehicle from one lane of traffic to another, shall first see that such movement can be made with safety and shall proceed to pass only after giving a proper signal by hand or mechanical device.

D. Except when overtaking and passing on the right is permitted, the driver of an overtaken vehicle shall give way to the right in favor of the overtaking vehicle on audible signal, and shall not increase the speed of his vehicle until completely passed by the overtaking vehicle. (Prior Code, Chapter 20)

SECTION 15-506 PASSING PROHIBITED.

A. No vehicle shall at any time be driven to the left side of the roadway under the following conditions:

1. When approaching the crest of a grade or upon a curve in the highway where the driver's view is obstructed within such distance as to create a hazard in the event another vehicle might approach from the opposite direction;

2. When approaching within one hundred (100) feet of or traversing an intersection or railroad grade crossing; or

3. When the view is obstructed upon approaching within one hundred (100) feet of any bridge, viaduct or tunnel.

B. It is a violation to pass on the left by going to the left of the center of the roadway across a double-marked center line for the purpose of passing a vehicle traveling in the same direction.

C. This section shall not apply upon a one-way roadway. (Prior Code, Chapter 20)

SECTION 15-507 DESIGNATION OF NO-PASSING ZONES.

A. The Oklahoma Department of Transportation as regards state and federal highways, and the city administrator, subject to direction of the council, as regards all other streets, are authorized to determine those portions of a highway where overtaking and passing or driving to the left of the roadway would be especially hazardous and shall by appropriate signs or markings on the roadway have the beginning and end of such zones indicated. When such signs or markings are in place and clearly visible to an ordinarily observant person, every driver of a vehicle shall obey the directions thereof.

B. Where signs or markings are in place to define a no-passing zone, no driver shall at any time drive to the left side of the roadway within such no-passing zone or on the left side of any pavement stripping designed to mark such no-passing zone through its length. (Prior Code, Chapter 20)

SECTION 15-508 SCHOOL BUSES; MARKINGS; PASSING REGULATIONS.

A. The driver of a vehicle upon any street or highway in the city upon meeting or overtaking from either direction any school bus on which the red loading signals are in operation and which has stopped for the purpose of receiving or discharging any schoolchildren and other occupants shall stop the vehicle before it reaches the school bus. The driver may then proceed to pass such school bus at a speed which is reasonable and prudent and with due caution for the safety of such schoolchildren and other occupants after the loading signals are deactivated.

B. Every school bus used for the transportation of schoolchildren shall bear upon the front and rear thereof plainly visible signs containing the words "School Bus" in letters not less than eight (8) inches in height and, in addition, shall be equipped with visual signs meeting the requirements of state law which shall be actuated by the driver of the school bus whenever, but only whenever, such vehicle is stopped on a street or highway for the purpose of receiving or discharging schoolchildren.

C. The driver of a vehicle upon a street or highway with separate roadways need not stop upon meeting or passing a school bus which is on a different roadway or when upon a controlled-access highway and the school bus is stopped in a loading zone which is part of or adjacent to such street or highway and where pedestrians are not permitted to cross the roadway. (Prior Code, Chapter 20)

State Law Reference: Similar provisions, 47 O.S. Sec. 11-705.

SECTION 15-509 DRIVING ON LANED ROADWAYS, MARKING TRAFFIC LANES.

A. The city administrator, subject to direction of the council, is authorized to have traffic lanes marked upon the roadway or any street where a regular alignment of traffic is necessary.

B. Whenever any roadway has been divided into two (2) or more clearly marked lanes for traffic, the following rules in addition to all others consistent herewith shall apply:

1. A vehicle shall be driven as nearly as practicable entirely within a single lane and shall not be moved from such lane until the driver has first ascertained that such movement can be made with safety and has properly signaled his intentions to do so;

2. Upon a roadway which is divided into three (3) lanes, a vehicle shall not be driven in the center lane except when overtaking and passing another vehicle where the roadway is clearly visible and such center lane is clear of traffic within a safe distance, or in preparation for a left turn, or where such center lane is at the time allocated exclusively to traffic moving in the direction the vehicle is proceeding and is sign posted to give notice of such allocation; and

3. Official signs may be erected directing slow-moving traffic to use a designated lane or designating those lanes to be used by traffic moving in a particular direction regardless of the center of the roadway, and drivers of vehicles shall obey the directions of every such sign.

C. Where traffic lanes have been marked, no operator of any vehicle shall fail or refuse to keep the vehicle within the boundaries of any such lane except when lawfully passing another vehicle or preparatory to making lawful turning movement or otherwise authorized by ordinance. (Prior Code, Chapter 20)

SECTION 15-510 DRIVING ON DIVIDED HIGHWAYS.

Whenever any highway has been divided into two (2) roadways by leaving an intervening space or by a physical barrier or clearly indicated divided section so constructed as to impede vehicular traffic, every vehicle shall be driven only upon the right-hand roadway. No vehicle shall be driven over, across or within any such dividing space barrier or section, except through an opening in such physical barrier, dividing section or space or at a crossover or intersection established by public authority.

SECTION 15-511 FOLLOWING TOO CLOSELY.

The driver of a motor vehicle shall not follow another vehicle more closely than is reasonable and prudent, having due regard to the speed of such vehicles and the traffic upon and the condition of the highway. Such driver following too closely shall be deemed negligent. (Prior Code, Chapter 20)

SECTION 15-512 RESTRICTED-ACCESS ROADWAYS.

No person shall drive a vehicle onto or from any controlled-access roadway except at such entrances and exits as are established by public authority. (Prior Code, Chapter 20)

SECTION 15-513 DRIVING THROUGH SERVICE DRIVES.

No vehicle shall be driven through any service drive or parking area except for the purpose of attaining service or merchandise or for the purpose of parking thereon.

SECTION 15-514 RECKLESS DRIVING.

It shall be deemed reckless driving for any person to drive a motor vehicle in a careless or wanton manner without regard for the safety of persons or property. (Prior Code, Chapter 20)

State Law Reference: Similar provisions, 47 O.S. Sec. 11-901.

SECTION 15-515 CARELESS OR NEGLIGENT DRIVING.

A. No person shall drive, use, operate, park, cause to be parked, or stop any vehicle:

1. In a careless manner;

2. In a negligent manner;

3. In such a manner as to endanger life, limb, person or property; or

4. In such a manner or condition as to interfere with the lawful movement of traffic or use of the streets.

B. Every driver shall remain alert and give full attention to the safe control and operation of his vehicle while it is in motion. Every driver of a motor vehicle shall, upon stopping, or upon stopping and leaving the vehicle, park the same in a careful and prudent manner and place so as not to interfere with the operation of other vehicles or with pedestrians or other traffic. Failure to comply with these requirements shall be deemed careless driving in violation of this section.

C. Any driver who engages in any activity or does any act while driving that interferes with the safe operation and control of his vehicle, or who continues to operate his vehicle when any other person riding thereon or therein engages in any activity or does any act which interferes with his operation thereof, is guilty of careless driving.

D. A driver of a motor vehicle who collides with another vehicle or with any person or property because of driving error or inattention is guilty of careless driving. (Prior Code, Chapter 20)

SECTION 15-516 DRIVING OVER FIRE HOSE.

Whenever any hose of the fire department is laid upon any street, avenue, alley, bridge or vacant lot in the city, no person shall drive any automobile, truck, locomotive, railroad car or any other vehicle over the same unless the hose shall have been protected by wooden railings or other device laid along the side thereof, and then only at the places so protected unless otherwise directed by a city official. (Prior Code, Chapter 20)

State Law Reference: Driving over fire hose, 47 O.S. Sec. 11-1109.

SECTION 15-517 FOLLOWING FIRE OR EMERGENCY APPARATUS.

The driver of any vehicle other than on official business shall not follow any emergency or fire apparatus traveling in response to a fire alarm closer than five hundred (500) feet, or drive into or park such vehicle within the block where emergency apparatus has stopped in answer to a fire alarm.

SECTION 15-518 PROCEDURES ON APPROACH OF EMERGENCY VEHICLES.

A. Upon the immediate approach of an authorized emergency vehicle making use of audible and visual signals meeting the requirements of the laws of this State, or of a police vehicle properly and lawfully making use of an audible signal only, the driver of every other vehicle shall yield the right-of-way and shall immediately drive to a position parallel to, and as close as possible to, the right-hand edge or curb of the roadway clear of any intersection, and shall stop and remain in such position until the authorized emergency vehicle has passed, except when otherwise directed by a police officer.

B. This section shall not operate to relieve the driver of an authorized emergency vehicle from the duty to drive with due regard for the safety of all persons using the highway. (Prior Code, Chapter 20)

State Law Reference: Similar provisions, 42 O.S. Sec. 11-405.
Cross Reference: See also Sec. 15-2006 on exemptions for emergency vehicles.

SECTION 15-518.1 DRIVER OF A MOTOR VEHICLE APPROACHING A STATIONARY EMERGENCY VEHICLE.

A. The driver of a motor vehicle, upon approaching a stationary authorized emergency vehicle that is displaying a flashing combination red or blue light or any combination of red or blue lights, shall:

1. If traveling on a road, street, or highway that consists of two or more lanes that carry traffic in the same direction of travel as that of the driver, the driver shall proceed with due caution and shall, if possible and with due regard to the road, weather, and traffic conditions, change lanes into a lane that is not adjacent to the stationary authorized emergency vehicle; or if the driver is not able to change lanes or if to do so would be unsafe, the driver shall proceed with due caution and reduce the speed of the motor vehicle to a safe speed for the existing road, weather, and traffic conditions; and,

2. If traveling on a road, street, or highway other than as described in paragraph 1 of this subsection, the driver shall proceed with due caution and reduce the speed of the motor vehicle to a safe speed for the existing road, weather, and traffic conditions.

SECTION 15-519 ACTUAL PHYSICAL CONTROL OF VEHICLE WHILE INTOXICATED.

No person who is under the influence of alcoholic beverage, non intoxicating beverage,

or drug as defined in this Code and in Section 15-519, shall be in actual physical control of any motor vehicle within the City. (Prior Code, Chapter 20)

Cross Reference: See also transporting open container, Sec. 3-106. 3-210 of this Code.

SECTION 15-520 DRIVING UNDER THE INFLUENCE OF ALCOHOL OR INTOXICATING SUBSTANCES; DRIVING WHILE IMPAIRED; EVIDENCE; PENALTY.

A. No person who is:

1. Under the influence of an alcoholic beverage or nonintoxicating beverage;

2. Under the combined influence of alcohol or any other intoxicating substance as provided in Subsection D; or,

3. Under the influence of any other intoxicating substance to a degree which renders such person incapable of safely driving or operating a motor vehicle shall drive or operate a motor vehicle in the City.

B. No person shall drive or operate a motor vehicle while his ability to operate the motor vehicle is impaired by the consumption of alcoholic beverage or nonintoxicating beverage within the City.

C. No person who is an habitual user of or under the influence of any narcotic drug, barbiturate, amphetamine, or marijuana, or who is under the influence of any other drug to a degree which renders him incapable of safety diving a motor vehicle, shall operate a motor vehicle within the City. The fact that any person charged with a violation of this subsection is or has been lawfully entitled to use such narcotic drug, barbiturate, amphetamine, marijuana, or other drug shall not constitute a defense against any charge of violating this subsection.

D. As used in this section, "other intoxicating substance" or "drug" means any controlled dangerous substance as defined in the Uniform Controlled Dangerous Substance Act, and any other substance, other than alcohol, which is capable of being ingested, inhaled, injected, or absorbed into the human body and is capable of adversely affecting the central nervous system, vision, hearing, or other sensory or motor functions.

E. Upon the trial of any criminal action or proceeding arising out of acts alleged to have been committed by any person while driving or in actual physical control of a motor vehicle while under the influence of alcohol or intoxicating liquor, evidence of the amount of alcohol or intoxicating liquor in the person's blood as shown by a chemical analysis of his blood or breath is admissible for the purpose of this section:

1. Evidence that there was an alcohol concentration of five-hundredths (.05) or less is Prima facie evidence that the person was not under the influence of alcohol or Intoxicating liquor.

2. Evidence that there was an alcohol concentration of more than five-hundredths (.05) but less than eight-hundredths .08 is relevant evidence of operating a motor vehicle while his ability to operate such motor vehicle is impaired by the consumption of alcohol or intoxicating liquor. No person shall be convicted of the offense of operating a motor vehicle while his ability to operate such vehicle is impaired by consumption of alcohol or intoxicating liquor solely because there was an alcohol concentration of more than five-hundredths (.05) in the absence of additional evidence that such person's driving was affected by the consumption of alcohol to the extent that the public health and safety was threatened or that the person had violated a state statute or local ordinance in the operation of the motor vehicle.

3. Evidence that there was an alcohol concentration of eight hundredths (.08) or more shall be admitted as prima facie evidence that the person was under the influence of alcohol or intoxicating liquor.

4. Alcohol concentration shall mean grams of alcohol per 100 milliliters of blood if blood was tested, or grams of alcohol per 210 liters of breath, if breath was tested.

5. To be admissible, such evidence must first be qualified by establishing that such specimen was obtained from the subject within not more than two (2) hours of the arrest of the subject.

F. Every person who is convicted of a violation of this section for operating a motor vehicle under the influence of alcohol or intoxicating liquor shall be punished as provided in Section 1-108 of this Code.

SECTION 15-520.1 ALCOHOL AND DRUGS–PERSONS UNDER 21 YEARS OF AGE.

A. It is unlawful and an offense for any person under the age of 21 years of age to drive, operate, or be in actual physical control of a motor vehicle within the City of Piedmont who:

1. Has any measurable quantity of alcohol in the person's blood or breath at the time of a test administered within two (2) hours after an arrest.

2. Exhibits evidence of being under the influence of any other intoxicating substance as shown by analysis of blood, breath, saliva, or urine in accordance with the provisions of Section 752 and 759 of Title 47, Oklahoma Statutes.

3. Exhibits evidence of the combined influence of alcohol and any other intoxicating substance.

B. As used in this section "intoxicating substance" means any controlled dangerous substance as defined in Section 2-101, et seq., of Title 63 Oklahoma Statutes, or any other substance, other than alcohol, which is capable of being ingested, inhaled, injected, or absorbed into the human body and is capable of adversely affecting the central nervous system, vision, hearing, or other sensory or motor functions.

SECTION 15-521 DRIVER'S LICENSE REQUIRED.

A. No person shall drive or operate any motor vehicle on any public street or roadway within the City unless such person has in his immediate possession a current, not suspended or revoked, valid driver's license for the class of vehicle being operated as required by State law and bearing all necessary endorsements thereon.

B. The following persons are exempt from an Oklahoma driver's license hereunder: A non-resident who is sixteen (16) years of age or older, who is properly licensed in his home state or country to operate a commercial or noncommercial vehicle, and who has in his immediate possession a valid driver's license issued by his home state or country, may operate a motor vehicle in Oklahoma as authorized by the class, restrictions, and endorsements specified on the license. (Prior Code, Chapter 20; Ord. No. 308, 7/27/92).

(This page intentionally left blank)

SECTION 15-522 DRIVING WHILE LICENSE SUSPENDED; USE OF FALSE LICENSE.

A. No person shall:

1. Display or cause or permit to be displayed or have in his possession any cancelled, revoked, suspended, fictitious, photostatic, or fraudulently altered operator's or chauffeur's license.

2. Lend his operator's or chauffeur's license to any other person or knowingly permit the use thereof by another.

3. Display or represent as his own any operator's or chauffeur's license not issued to him.

4. permit any unlawful use of an operator's or chauffeur's license issued to him.

B. No person shall drive a motor vehicle on any public street within the City at a time when his privilege to do so is cancelled, suspended, or revoked. (Prior Code, Chapter 20).

SECTION 15-523 PERMITTING UNLICENSED PERSON TO DRIVE.

No person shall authorize or knowingly permit a motor vehicle owned by him or under his control to be driven upon any street in the City by any person who is not authorized or licensed to drive a motor vehicle under the laws of the State or under the laws of the State of the driver's residence of record. (Prior Code, Chapter 20)

SECTION 15-524 DRIVING THORUGH FUNERAL PROCESSIONS.

A. No driver of a vehicle shall drive between the vehicles comprising a funeral or other authorized procession while they are in motion and when such vehicles are conspicuously designated as required in this Chapter.

B. This section shall not apply at intersections where traffic is controlled by police officers. (Prior Code, Chapter 20)

SECTION 15-525 DRIVING IN FUNERAL PROCESSION.

Each driver in a funeral or other procession shall drive as near to the right-hand edge of the roadway as practicable except when otherwise directed or escorted by a police officer. Each driver shall follow the vehicle ahead as closely as is practicable and safe, and at a speed as designated by the escort of the procession. (Prior Code, Chapter 20)

SECTION 15-526 IDENTIFICATION OF FUNERAL PROCESSIONS.

A funeral composed of a procession of vehicles shall be identified by headlights turned on, or by the display upon the outside of each vehicle an identifying insignia, or by such other method as may be determined and designated by the police department. (Prior Code, Chapter 20)

SECTION 15-527 USE OF ROLLER SKATES, COASTERS, SKATEBOARDS, ON ROADWAY.

No person upon roller skates, or riding in or by means of any coaster, skateboard, toy vehicle, or similar device shall go upon any roadway except while crossing a street in a crosswalk. While so crossing such person shall be granted all of the rights and be subject to all of the duties applicable to pedestrians. This section shall not apply upon any street while set aside as a play street authorized by ordinance. (Prior Code, Chapter 20)

SECTION 15-528 PLAY STREETS AUTHORIZED.

The City Manager, subject to direction by the Council, if any, shall have authority to declare any street or part thereof a play street and have placed appropriate signs or devices in the roadway indicating and helping to protect the same. (Prior Code, Chapter 20)

SECTION 15-529 USE OF PLAY STREETS BY MOTOR VEHICLES.

Whenever authorized signs are erected indicating any street or part thereof as a play street, no person shall drive a vehicle upon any such street or portion thereof except drivers of vehicles having business or whose residences are within such closed area, and then such drivers shall exercise the greatest care in driving upon any such street or portion thereof. (Prior Code, Chapter 20)

SECTION 15-530 OBSTRUCTING INTERSECTION OR CROSSWALK.

No driver shall enter an intersection or a marked crosswalk unless there is sufficient space on the other side of the intersection or crosswalk to accommodate the vehicle he is operating without obstructing the passage of other vehicles or pedestrians, notwithstanding any traffic control signal indication to proceed. (Prior Code, Chapter 20)

SECTION 15-531 DRIVING ON SIDEWALK PROHIBITED.

The driver of a vehicle shall not drive upon a sidewalk or within any sidewalk area except at a permanent or temporary driveway. (Prior Code, Chapter 20)

State Law Reference: Power of city to prohibit driving on sidewalks, 11 O.S. Sec. 20-117.

SECTION 15-532 DRIVING IN PUBLIC PARKS RESTRICTED, DRIVING ON PROPERTY WITHOUT PERMISSION.

A. No person shall drive, operate or propel a motor vehicle or motor-driven cycle, including a motor scooter or motor-driven bicycle, in any park, public property or right of way or easement, within or owned by the city, except upon established roadways or roadways designed for vehicular traffic. A vehicle may be driven a reasonable distance from the roadway for the purpose of going to and from a parking place.

B. No person shall drive, operate or propel a motor vehicle or motor-driven cycle past any barrier, sign or other device indicating that vehicular traffic is prohibited in, upon or through any area upon which vehicular traffic is prohibited.

C. No person shall drive a motor vehicle of any size on any private property unless the operator has obtained the permission of the owner of the private property.

D. Emergency vehicles are exempt from the provisions of this section. (Prior Code, Chapter 20)

Cross Reference: Park and recreation rules, Part 11 of this code.

SECTION 15-533 STARTING STOPPED OR PARKED VEHICLES.

No person shall start a vehicle which is stopped, standing or parked unless and until such movement can be made with reasonable safety. (Prior Code, Chapter 20)

SECTION 15-534 BACKING OF VEHICLE.

The driver of a vehicle shall not back the same unless such movement can be made without interfering with other traffic. When a vehicle is backed more than thirty (30) feet, such movement shall be deemed unsafe. (Prior Code, Chapter 20)

SECTION 15-535 OPENING AND CLOSING VEHICLE DOOR.

No person shall open the door of a motor vehicle on the side available to moving traffic unless and until it is reasonably safe to do so. No person shall leave a door open on the side of a motor vehicle available to moving traffic to load or unload passengers. (Prior Code, Chapter 20)

SECTION 15-536 OBSTRUCTIONS TO DRIVER'S VIEW; NUMBER IN FRONT SEAT.

A. No person shall drive a vehicle when it is so loaded or when there are in the front seat such a number of persons, exceeding three (3), as to obstruct the view of the driver to the front or sides of the vehicle or as to interfere with the driver's control over the driving mechanism

of the vehicle.

B. No passenger in a vehicle shall ride in such position as to interfere with the driver's view ahead or to the sides or to interfere with his control over the driving mechanism of the vehicle. (Prior Code, Chapter 20)

SECTION 15-537 CLINGING TO VEHICLE.

No person riding upon any bicycle, coaster, roller skates, sled or toy vehicle shall attach the same or himself to any vehicle upon a roadway. (Prior Code, Chapter 20)

SECTION 15-538 BOARDING OR ALIGHTING FROM MOVING VEHICLE.

No person shall board or alight from any vehicle while such vehicle is in motion. (Prior Code, Chapter 20)

SECTION 15-539 RIDING OUTSIDE VEHICLE COMPARTMENT.

No person shall ride on any vehicle upon any portion thereof not designed or intended for use of passengers. This section shall not apply to an employee engaged in the necessary discharge of a duty, or to persons riding within truck bodies in space intended for merchandise. (Prior Code, Chapter 20)

SECTION 15-540 DRIVING THROUGH SAFETY ZONE.

No vehicle shall at any time be driven through or within a safety zone or island. (Prior Code, Chapter 20)

SECTION 15-541 CHILD PASSENGER RESTRAINT SYSTEM OR SEAT BELT REQUIRED; EXCEPTIONS; PENALTY.

A. As used in this section , "child passenger restraint system" means an infant or child passenger restraint system that meets the federal standards for crash-tested restraint systems as set by the United States Department of Transportation.

B. Every driver when transporting a child under four (4) years of age in a motor vehicle operated in this city shall properly secure the child in a child passenger restraint or in a seat belt in the rear of the motor vehicle. Children four (4) and five (5) years of age shall be protected by use of a child passenger restraint system or a seat belt.

C. This section shall not apply to:

1. The driver of a school bus, taxicab, moped, motorcycle, or other motor vehicle not required to be equipped with safety belts pursuant to city ordinance, state statute, or federal law;

2. The driver of an ambulance or emergency vehicle; or

3. A driver of a vehicle if all of the seat belts in the vehicle are in use; and

4. The transportation of children who for medical reasons are unable to be placed in such devices.

D. A law enforcement officer is hereby authorized to stop a vehicle if it appears that the driver of the vehicle has violated the provisions of this section and to give an oral warning to the driver. The warning shall advise the driver of the possible danger to children resulting from the failure to install or use a child passenger restraint system or seat belts in the motor vehicle.

E. A violation of the provisions of this section shall not be admissible as evidence in any civil action or proceeding for damages. In any action brought by or on behalf of an infant for personal injuries or wrongful death sustained in a motor vehicle collision, the failure of any person to have the infant properly restrained in accordance with the provisions of this section shall not be used in aggravation or mitigation of damages.

F. Any person convicted of violating this section shall be punished by a fine of Ten Dollars ($10.00), or the maximum amount allowed by State law, whichever is greater, and shall pay court costs. The fine shall be suspended in the case of the first offense upon proof of purchase or acquisition by loan of a child passenger restraint system. The fine need not be suspended if the child was being transported in a motor vehicle already equipped with a child passenger restraint system.

Cross Reference: See also Sec. 1-108 for general penalty section.

SECTION 15-542 SEAT BELTS REQUIRED FOR FRONT SEAT PASSENGERS; EXCEPTIONS.

A. 1. Every operator and front seat passenger of a passenger car operated in this City shall wear a property adjusted and fastened safety seat belt system, required to be installed in the motor vehicle when manufactured pursuant to 49 C.F.R., Section 571.208.

2. For the purposes of this section, "passenger car" shall mean "vehicle" as defined in Section 1102. "Passenger car" shall include the passenger compartment of pickups, vans, minivans, and sport utility vehicles. "Passenger car" shall not include trucks, truck-tractor, recreational vehicles, motorcycles, or motorized bicycles. "Passenger car" shall not include a vehicle used primarily for farm use which is registered and licensed pursuant to the provisions of Section 47 Oklahoma Statutes, Section 1134 of this title.

B. The Commissioner of Public Safety, upon application from a person who, for medical reasons, is unable to wear a safety seat belt system supported by written attestation of such fact from a physician licensed pursuant to Section 495 of Title 59 of the Oklahoma Statutes, may issue to the person an exemption from the provisions of this section. The exemption shall be in the form of a restriction appearing on the driver's license of the person and shall remain in effect until the expiration date of the driver's license. Nothing in this subsection shall be construed to prevent the person from applying for another exemption as provided for in this section. The issuance of an attestation by a physician and the subsequent issuance of an exemption by the Commissioner, in good faith, shall not give rise to, nor shall the physician and the state thereby incur, any liability whatsoever in damages or

otherwise, to any person injured by reason of failure of the person to wear a safety seat belt system.

C. This section shall not apply to an operator of a motor vehicle while performing official duties as a route carrier of the U. S. Postal Service.

D. Fine and court costs for violating the provisions of this section shall not exceed Twenty Dollars ($20.00), or the maximum amount permitted by State law.

Cross Reference: See also Sec. 1-108 for general penalty section.

SECTION 15-543 OBEDIENCE TO SIGNAL INDICATING APPROACH OF TRAIN.

A. whenever any person driving a vehicle approaches a railroad grade crossing under any of the circumstances stated in this section, the driver of such vehicle shall stop within fifteen (50) feet but not less than fifteen (15) feet from the nearest rail of such railroad, and shall not proceed until he can do so safely. The foregoing requirements shall apply when:

1. A clearly visible electrical or mechanical signal device gives warning of the immediate approach or passage of a railroad train;

2. A crossing gate is lowered or when a human flagman gives or continues to give a signal of the approach or passage of a railroad train;

3. A railroad train approaching within approximately one thousand five hundred (1,500) feet of the highway crossing emits a signal audible from such distance and such railroad train, by reason of its speed or nearness to such crossing, is an immediate hazard; or,

4. An approaching railroad train is plainly visible and is in hazardous proximity to such crossing.

B. No person shall drive any vehicle through, around, or under any crossing gate or barrier at a railroad crossing while such gate or barrier is closed or is being opened or closed.

SECTION 15-544 CERTAIN VEHICLES TO STOP AT ALL RAILROAD GRADE CROSSINGS.

A. The driver of any motor vehicle carrying passengers for hire, or of any school bus carrying any school child, or of any vehicle carrying explosive substances or flammable liquids as a cargo or part of a cargo, before crossing at grade any track or tracks of railroad, shall stop such vehicle within fifty (50) feet but not less than fifteen (15) feet from the nearest rail of such railroad, and while so stopped shall listen and look in both directions along such track for any approaching train and for signals indicating the approach of a train, except as hereinafter provided, and shall not proceed until he can do so safety. After stopping as required herein and upon proceeding when it is safe to do so, the driver of any

such vehicle shall cross only in such gear of the vehicle that there will be no necessity for changing gears while traversing such crossing, and the driver shall not shift gears while crossing the track or tracks.

B. No stop need be made at any such crossing where a police officer or traffic control signal directs traffic to proceed.

(This page intentionally left blank)

CHAPTER 6

STOPPING, STANDING AND PARKING

ARTICLE A

PARKING REGULATIONS

Section 15-601	Stopping, standing or parking prohibited in certain places.
Section 15-602	Handicapped parking restrictions.
Section 15-603	Parking not to obstruct traffic or signs.
Section 15-604	Parking for certain purposes prohibited.
Section 15-605	Removing enforcement marking.
Section 15-606	Standing or parking on left side of roadway.
Section 15-607	Parking on private property; impounding of vehicle.
Section 15-608	Driving or parking on commercial business property restricted, signs.
Section 15-609	Parking more than twenty-four (24) hours.
Section 15-610	Unattended vehicles.
Section 15-611	Authority to restrict parking time.
Section 15-612	Parking in private parking spaces without permission of owner.
Section 15-613	Prohibiting parking within fire lanes on certain private property.
Section 15-614	Limiting parking to authorized emergency vehicles.
Section 15-615	Presumption in prosecutions for standing or parking violations.

ARTICLE B

MANNER OF PARKING

Section 15-620	Distance from curb.
Section 15-621	Brakes to be set; motor not to be running; securing animals.
Section 15-622	Angle parking.
Section 15-623	Parking within marked spaces.
Section 15-624	Parking to be such as to leave ten (10) feet or roadway available for traffic.
Section 15-625	Double parking prohibited.

ARTICLE A

PARKING REGULATIONS

SECTION 15-601 STOPPING, STANDING OR PARKING PROHIBITED IN CERTAIN PLACES.

A. No person shall stop, stand or park a vehicle, except when necessary to avoid a conflict with other traffic or in compliance with law or ordinance or the directions of a police officer or traffic-control device, in any of the following places:

1. On a sidewalk;

2. In front of a public or private driveway;

3. Within an intersection;

4. Within fifteen (15) feet of a fire hydrant except in a parking space officially marked;

5. On a crosswalk;

6. Within twenty (20) feet of a crosswalk at an intersection except in a parking space officially marked;

7. Within thirty (30) feet upon the approach to any flashing beacon, stop sign or traffic-control signal located at the side of a roadway;

8. Between a safety zone and the adjacent curb or within thirty (30) feet of points on the curb immediately opposite the ends of a safety zone, unless the city indicates the different length by signs or markings;

9. Within fifty (50) feet of the nearest rail of a railroad crossing;

10. Within twenty (20) feet of the driveway entrance to any fire station or, on the side of a street opposite the entrance to any fire station, within seventy-five (75) feet of such entrance when properly signposted;

11. Alongside or opposite any street excavation or obstruction when stopping, standing or parking would obstruct traffic;

12. On the roadway side of any vehicle stopped or parked at the edge or curb of a street;

13. Upon any bridge or other elevated structure upon a highway or within a highway underpass; and

14. At any place where official signs prohibit stopping, standing or parking;

15. At any other place prohibited by this code or law.

B. No person shall move a vehicle not lawfully under his control into any such prohibited area or away from a curb such distance as is lawful.

C. No person shall park any vehicle in front of any show, theater, or place of amusement during any performance or entertainment therein, or while patrons are in such place either before the commencement or after the close of any performance. The police or fire chief shall plainly indicate such nonparking spaces by appropriate signs or markings. (Prior Code, Chapter 20)

State Law Reference: Requirements for stopping, standing and parking, 47 O.S. Secs. 11-1001 et seq.

Cross Reference: See also truck parking restrictions, Section 15-1101 et seq. of this code.

SECTION 15-602 HANDICAPPED PARKING RESTRICTIONS.

No person shall be permitted to place or park a motor vehicle in any parking space that is designated and posted as a reserved area for parking of motor vehicles of a physically disabled person unless such vehicle is eligible for a detachable insignia of a physically disabled person issued by the State Department of Public Safety as provided for in Section 15-112 of Title 47 of the Oklahoma Statutes, as amended, and such insignia is displayed as provided in accordance with state law or regulations adopted pursuant thereto. The provisions of this section shall apply to any such designated and posted reserved area on public property or private property accessible to the public and where the public is invited. Any person convicted of a violation of this section shall be punished as provided in Section 1-108 of this code, subject to the maximum penalty allowed by state law. In addition thereto, any person so convicted shall pay any and all reasonable and necessary charges incurred by the landowner or other person in having any motor vehicle unlawfully parked hereunder removed from the property and stored. (Prior Code, Chapter 20)

State Law Reference: Handicapped parking restrictions, 47 O.S. Secs. 11-1007, 11-1008.

SECTION 15-603 PARKING NOT TO OBSTRUCT TRAFFIC OR SIGNS.

A. No person shall park a vehicle within a street or alley in such a manner or under such conditions as to prohibit the free movement of authorized emergency vehicles or vehicular traffic.

B. No person shall stop, stand or park a vehicle within a street or alley in such a position as to block the driveway entrance to any abutting property.

C. No person shall at any time stop, stand or park a vehicle except when necessary to avoid conflict with other traffic, in compliance with the directions of a police officer or traffic-control device or in case of emergency within any alley except for the purpose of and while actually engaged in loading or unloading merchandise, with the maximum time permitted for loading or unloading being one hour; however, such vehicle must be headed in the proper direction in the alley and it must be parked on the right half of one way alleys.

D. Any vehicle parked upon the public streets or right-of-way shall be parked so as not to obstruct the view of any flashing beacon, stop sign or traffic-control signal by oncoming traffic. (Prior Code, Chapter 20)

SECTION 15-604 PARKING FOR CERTAIN PURPOSES PROHIBITED.

No person shall park his vehicle upon any street or highway for the principal purpose of:

1. Displaying the vehicle for sale;

2. Displaying advertising or displaying merchandise;

3. Washing, greasing or repairing the vehicle except repairs necessitated by an emergency; and

4. Selling merchandise or any other thing from vehicles without appropriate permit or license from the city. (Prior Code, Chapter 20)

Cross Reference: Businesses, itinerant vendors, Part 9 of this code.

SECTION 15-605 REMOVING ENFORCEMENT MARKING.

No person, with intent to extend the time during which a motor vehicle can be parked at a time-restricted parking space, shall remove, erase, obliterate, smudge or otherwise delete or disfigure any chalk or any other mark or symbol used by authorized employees of the city in connection with the enforcement of motor vehicle parking restrictions. (Prior Code, Chapter 20)

SECTION 15-606 STANDING OR PARKING ON LEFT SIDE OF ROADWAY.

A. The city administrator, subject to direction of the council, may determine when standing or parking may be permitted upon the left-hand side of any one-way roadway and to have signs or marks placed giving notice thereof.

B. In the event a highway includes two (2) or more separate roadways and traffic is restricted to one direction upon any such roadway, no person shall stand or park a vehicle upon the left-hand side of such one-way roadway unless signs or marks are placed to permit such standing or parking. (Prior Code, Chapter 20)

SECTION 15-607 PARKING ON PRIVATE PROPERTY; IMPOUNDING OF VEHICLE.

A. No person shall park a vehicle on the private property of another without the consent of the owner of the property, his agent or tenant.

B. Any unoccupied vehicle parked in violation of this section may, upon complaint of the property owner, his agent or tenant, be removed and impounded by the police; and the vehicle owner must pay removal, storage and impounding fees.

Cross Reference: See also Part 8 on removing abandoned vehicles and Section 10-318 on parking vehicles after hours.

SECTION 15-608 DRIVING OR PARKING ON COMMERCIAL BUSINESS PROPERTY RESTRICTED, SIGNS.

A. It is unlawful for any person to drive or park a motor vehicle onto the driveway, parking area or any portion of the premises of any business or commercial property if signs are posted.

B. This section shall be enforced as to all private property where a sign shall have been posted in a clearly visible location stating substantially as follows:

"PRIVATE PROPERTY. NO PARKING OR TRESPASSING."

(Prior Code, Chapter 20)

Cross Reference: See also Section 10-318 prohibiting parking on business property after hours.

SECTION 15-609 PARKING MORE THAN TWENTY-FOUR (24) HOURS.

No person shall park a vehicle on any street for a period of time longer than twenty-four (24) hours. (Prior Code, Chapter 20)

SECTION 15-610 UNATTENDED VEHICLES.

The person driving or in charge of a motor vehicle shall not permit it to stand unattended without first stopping the engine and effectively setting the brake thereon and, when standing upon any grade, turning the front wheels to the curb or side of the street. (Prior Code, Chapter 20)

State Law Reference: Similar provisions, 47 O.S., Sec. 11-1101.

SECTION 15-611 AUTHORITY TO RESTRICT PARKING TIME.

A. The city council, by resolution, may establish parking time limits, or prohibit parking, on designated streets by having appropriate signs placed thereon.

B. When such signs are in place, no person shall park a vehicle in violation thereof. (Prior Code, Chapter 20)

SECTION 15-612 PARKING IN PRIVATE PARKING SPACES WITHOUT PERMISSION OF OWNER.

A. The parking, leaving or keeping of vehicles, either with or without occupants, upon real property owned or leased for use of hotels or business establishments as private parking places, without permission of the owner or lessee, as the case may be, is hereby prohibited.

B. Any vehicle parked or left in violation of subsection A shall, upon the complaint of the owner or lessee of the property, be removed from the premises by the police or on the order of any police officer, at the expense of the owner of the vehicle. Such removal may be accomplished by the police department or by a police department order directing any person operating a towing service to pull the vehicle to his garage or place of business, where it shall be held in the custody of the police department until the towing charges and the fine and costs, if any, are paid. (Prior Code, Chapter 20)

SECTION 15-613 PROHIBITING PARKING WITHIN FIRE LANES ON CERTAIN PRIVATE PROPERTY.

The city administrator, or his authorized representative, when the public safety shall require, is authorized and directed to prohibit parking upon private property used for shopping centers, schools, hospitals, nursing homes, restaurants and places of public entertainment within zones to be clearly designated and defined by appropriate sign, when the same is necessary for the establishment of fire lanes to avoid obstruction of free passage and access. No person shall stop, stand or park a vehicle, except an authorized emergency vehicle, within such prohibited fire lanes, except on direction and by authority of a police officer. (Prior Code, Chapter 20)

SECTION 15-614 LIMITING PARKING TO AUTHORIZED EMERGENCY VEHICLES.

The city administrator, subject to any directions which the city council may give, is authorized to designate streets or portions thereof where parking is limited to authorized emergency vehicles. When signs are in place giving notice of such limitation, it shall be unlawful for any person to park any vehicle, except an authorized emergency vehicle, upon any such street or portion thereof. (Prior Code, Chapter 20)

SECTION 15-615 PRESUMPTION IN PROSECUTIONS FOR STANDING OR PARKING VIOLATIONS.

In any prosecution charging a violation of any law or regulation governing the standing or parking of a vehicle, proof that the particular vehicle described in the complaint was parked in violation of any such law or regulation, together with proof that the defendant named in the complaint was, at the time of such violation, the registered owner of such vehicle shall constitute in evidence a prima facie presumption that the registered owner of such vehicle was the person who parked or placed such vehicle at the point where, and for the time during which, such violation occurred. (Prior Code, Chapter 20)

State Law Reference: Removal of illegally stopped vehicles, 47 O.S. Sec. 11-1002.

Cross Reference: See also Part 8 of this code on removal of abandoned vehicles; Sections 15-1901 et seq on impoundment of illegally stopped and other vehicles.

ARTICLE B

MANNER OF PARKING

SECTION 15-620 DISTANCE FROM CURB.

Except as otherwise provided in this section, every vehicle stopped or parked upon roadway where there are adjacent curbs shall be so stopped or parked with the right-hand wheels of such vehicle parallel to and within eighteen (18) inches of the right-hand curb. Every vehicle stopped and parked upon the left-hand side of a one-way street where there are adjacent curbs shall be parked or stopped with the left-hand wheels parallel to and within eighteen (18) inches of the left-hand curb. (Prior Code, Chapter 20)

SECTION 15-621 BRAKES TO BE SET; MOTOR NOT TO BE RUNNING; SECURING ANIMALS.

Adequate brakes shall be set on all parked vehicles. No driver of a motor vehicle shall leave the vehicle with the motor running while parked. Animals left or parked on the streets shall be securely hitched. (Prior Code, Chapter 20)

SECTION 15-622 ANGLE PARKING.

A. The city administrator, subject to direction of the council, may determine upon what streets and parts of streets angle parking will be permitted and authority shall continue until changed permitting angle parking on any such street or part of street and the angle parking markings or signs are amended.

B. On those streets which have been so signed or marked for angle parking, no person shall park or stand a vehicle other than at the angle to the curb or edge of the roadway indicated by such signs or markings.

C. Angle parking is not permitted on any state or federal-aid highway unless the state department of transportation has determined that the roadway is of sufficient width to permit angle parking without interfering with the free movement of traffic. (Prior Code, Chapter 20)

SECTION 15-623 PARKING WITHIN MARKED SPACES.

In an area where parking spaces have been marked off on the surface of the street, a driver parking a vehicle shall park it within a parking space as thus marked off and not on or over a line delineating a space. (Prior Code, Chapter 20)

SECTION 15-624 PARKING TO BE SUCH AS TO LEAVE TEN (10) FEET OF ROADWAY AVAILABLE FOR TRAFFIC.

No person shall park a vehicle upon a street or alley in such a manner or under such conditions as to leave available less than ten (10) feet of the width of roadway for the free movement of vehicular traffic. (Prior Code, Chapter 20)

SECTION 15-625 DOUBLE PARKING PROHIBITED.

A. No vehicle shall be double parked on any street within the city limits except in compliance with the direction of a police officer, or traffic control device, or except when necessary to avoid conflict with another vehicle.

B. Delivery vehicles, either loading or unloading, may double park in the right-hand lane while in the process of loading or unloading and making delivery to local business establishments; provided that the driver of the delivery vehicle shall keep a lookout for cars and vehicles needing or attempting to move away from the curb and shall move his delivery vehicle as soon as possible to permit the parked vehicles to be moved. Such double parking shall be permitted only so long as both traffic lanes are not blocked. (Prior Code, Chapter 20)

CHAPTER 7

SPEED REGULATIONS

Section 15-701 Speed limits.
Section 15-702 Minimum speed.

SECTION 15-701 SPEED LIMITS.

A. Notwithstanding a maximum speed limit enumerated in this code, no person shall drive a vehicle upon any alley, highway, roadway, street or public parking area at a speed greater than or less than is reasonable or prudent under the conditions then existing, considering visibility, amount of traffic, condition of roadway surface, presence of pedestrians, obstruction of view and other similar facts.

B. No person shall drive any vehicle upon a street at a speed greater than will permit him to bring it to a stop within the assured clear distance ahead.

C. Except when a special hazard exists that requires lower speed for compliance with Subsection A of this section, the limits specified in this chapter or established as authorized shall be maximum lawful speeds. No person shall drive a vehicle on a highway at a speed in excess of such maximum limits as follows:

1. Twenty (20) miles per hour on any street in the central traffic district, except as may be posted otherwise and except on state or federal highways;

2. Twenty (20) miles per hour during the hours as posted in school zones when school is in session, except on state or federal highways;

3. Twenty-five (25) miles per hour on any state or federal highway adjacent to any school during the hours as posted in school zones when school is in session;

4. Thirty (30) miles per hour on other streets and highways.

These speeds may be reduced or increased by authority of the city and by posting appropriate signs.

D. The city administrator has authority to post lower speed limits than those prescribed in this chapter where special hazards exist.

E. The fact that the speed of a vehicle is lower than the designated limits shall not relieve the driver from the duty to decrease speed when approaching and crossing an intersection, when approaching and going around a curve, when approaching a hill crest, when traveling upon any narrow winding roadway, or when a special hazard exists with respect to pedestrians or other traffic, or by reason of weather or highway conditions and speed shall be decreased as may be necessary to avoid colliding with any person or vehicle or on entering the roadway in compliance with legal requirement and the duty of all persons to use due care and precaution. (Prior Code, Chapter 20)

State Law Reference: Power of city to set maximum speed limits, 47 O.S. Sec. 11-803.

SECTION 15-702 MINIMUM SPEED.

It is unlawful for any person to drive a motor vehicle at such slow speed as to impede or block the normal and reasonable movement of traffic, except when reduced speed is necessary for safe operation. Police officers are hereby authorized to enforce this provision by directions to drivers and in the event of willful disobedience to this provision or refusal to comply with the direction of an officer in accordance herewith, the continued slow operation by a driver shall be unlawful and constitute a blocking of traffic and a violation of this section. (Prior Code, Chapter 20)

State Law Reference: Similar provisions, 47 O.S., Sec. 11-804.

CHAPTER 8

RIGHT-OF-WAY

Section 15-801	Right-of-way at intersections.
Section 15-802	Right-of-way at intersections, vehicles arriving at same time.
Section 15-803	Left turn at intersection.
Section 15-804	Designation of through streets.
Section 15-805	Signs at through streets.
Section 15-806	Determination of stop and yield intersections.
Section 15-807	Vehicles entering stop intersections.
Section 15-808	Vehicle entering yield intersection.
Section 15-809	School zones and crosswalks.
Section 15-810	Emerging from alley or driveway.
Section 15-811	Obstructing intersection or crosswalk.

SECTION 15-801 RIGHT-OF-WAY AT INTERSECTIONS.

A. The driver of a vehicle on a street which is not a state or federal highway approaching an intersection with a state or federal highway shall stop and yield the right-of-way to a vehicle which has entered the intersection or which is so close thereto as to constitute an immediate hazard.

B. When two (2) vehicles enter or approach an intersection from different highways at approximately the same time, the driver of the vehicle on the left shall yield the right-of-way to the vehicle on the right.

C. The right-of-way rules declared in Subsections A and B are modified at through highways and otherwise as stated in this chapter.

D. The driver of a vehicle approaching a "T" intersection, traveling down the base of the "T" intersection approaching a dead end must yield the right- of-way to all traffic. (Prior Code, Chapter 20)

State Law Reference: Right-of-way regulations, 47 O.S. Secs. 11-401 et seq.

SECTION 15-802 RIGHT-OF-WAY AT INTERSECTIONS, VEHICLE ARRIVING AT SAME TIME.

A. Where two (2) or more vehicles face stop, slow, warning or caution signs or signals on two (2) or more intersecting cross streets, and are approaching so as to enter the intersection at the same time, where each vehicle is required to stop, the vehicle coming from the right shall have the right-of-way. Where each vehicle is required to slow, the vehicle coming from the right shall have the right-of-way. Where each vehicle is required to take caution, the vehicle coming from the right shall have the right-of-way.

B. The driver of a vehicle approaching an intersection shall yield the right-of-way to a vehicle which has entered the intersection from a different highway; provided that the driver of a vehicle on a street which is not a state or federal highway approaching an intersection with a

state or federal highway shall stop and yield the right-of-way to a vehicle which has entered the intersection or which is so close thereto as to constitute an immediate hazard.

C. Where one vehicle is required to stop and the other to slow or take caution, the one slowing or taking caution, shall have the right-of-way. Where one vehicle is required to slow and the other to take caution, the one required to take caution shall have the right-of-way. (Prior Code, Chapter 20)

SECTION 15-803 LEFT TURN AT INTERSECTION.

The driver of a vehicle within an intersection intending to turn to the left shall give a signal and yield the right-of-way to any vehicle approaching from the opposite direction which is within the intersection or so close thereto as to constitute an immediate hazard. However, the driver, having so yielded and having given a signal when and as required by this chapter, may make such left turn, and the drivers of all other vehicles approaching the intersection from the opposite direction shall yield the right-of-way to the vehicle making the left turn. (Prior Code, Chapter 20)

State Law Reference: Similar provisions, 47 O.S. Sec. 11-402.

SECTION 15-804 DESIGNATION OF THROUGH STREETS.

The city administrator, subject to direction of the council, may designate any street or part of street as a through street. (Prior Code, Chapter 20)

SECTION 15-805 SIGNS AT THROUGH STREETS.

Whenever the city administrator designates and describes a through street, the city administrator shall have placed and maintained a stop sign, or if deemed more appropriate at any intersection a yield sign, on each and every street intersection such through street, and a heavy-traffic street not so designated. Stop signs shall be erected at the approaches of either of the streets as may be determined by the administrator if deemed desirable. (Prior Code, Chapter 20)

SECTION 15-806 DETERMINATION OF STOP AND YIELD INTERSECTIONS.

A. The city administrator, subject to direction by the council, is authorized to determine and designate intersections where particular hazard exists upon other than through streets and to determine:

1. Whether vehicles shall stop at one or more entrances to any such intersection, in which event he shall cause to be erected a stop sign at every such place where a stop is required; or

2. Whether vehicles shall yield the right-of-way to vehicles on a different street at such intersection as prescribed in Section 15-807, in which event he shall cause to be erected a yield sign at every place where obedience thereto is required.

B. Every stop sign and every yield sign shall be erected as near as practicable to the nearest line of the crosswalk on the near side of the intersection or, if there is no crosswalk, then as near as practicable to the nearest line of the intersecting roadway.

C. Every stop sign shall bear the word "Stop" in letters not less than eight (8) inches in height. Every yield sign shall bear the word "Yield" in letters not less than seven (7) inches in height. Every stop sign and every yield sign shall, at nighttime, be rendered luminous by internal illumination, or by a floodlight project on the face of the sign, or by efficient reflecting elements in the face of the sign. (Prior Code, Chapter 20)

SECTION 15-807 VEHICLES ENTERING STOP INTERSECTIONS.

A. Except when directed to proceed by a police officer or traffic-control signal, every driver of a vehicle approaching a stop intersection indicated by a stop sign shall stop before entering the crosswalk on the near side of the intersection, or, in the event there is no crosswalk, shall stop at a clearly marked stop line, but, if none, then at the point nearest the intersecting roadway where the driver has a view of approaching traffic on the intersecting roadway before entering the intersection.

B. Such driver, after having stopped, shall yield the right-of-way to any vehicle which has entered the intersection from another highway or which is approaching so closely on the highway as to constitute an immediate hazard. The driver having so yielded may proceed only when it is prudent and apparently safe to do so. (Prior Code, Chapter 20)

SECTION 15-808 VEHICLE ENTERING YIELD INTERSECTION.

A. The driver of a vehicle approaching a yield sign shall in obedience to such sign slow down to a speed reasonable for the existing conditions, or shall stop if necessary and yield the right-of-way to any pedestrian legally crossing the roadway on which he is driving and to any vehicle in the intersection or approaching on another highway so closely as to constitute an immediate hazard. If such driver is involved in a collision with a pedestrian in a crosswalk or a vehicle in the intersection after driving past a yield sign, such collision shall be deemed prima facie evidence of his failure to yield the right-of-way.

B. The driver of a vehicle approaching a yield sign, is required for safety to stop, shall stop before entering the crosswalk on the near side of the intersection or, in the event there is no crosswalk, at a clearly marked stop line, but, if none, then at the point nearest the intersecting roadway where the driver has a view of approaching traffic on the intersection roadway. (Prior Code, Chapter 20)

SECTION 15-809 SCHOOL ZONES AND CROSSWALKS.

A. The city administrator, subject to direction by the council, is authorized to erect signs to designate school zones and school zone crosswalks.

B. No person may drive a vehicle past a school sign or through a school zone at a speed greater than that posted per hour posted on school days. Drivers proceeding in a school zone shall stop and yield the right-of-way to pedestrians in school zone crosswalks when so directed by a school safety patrol member or when such crosswalk is occupied by pedestrians between the hours posted on school days.

C. Any driver involved in a school zone crosswalk collision with a pedestrian after failing to slow and yield the right-of-way to such pedestrian shall be deemed prima facie in violation of this section.

SECTION 15-810 EMERGING FROM ALLEY OR DRIVEWAY.

The driver of a vehicle emerging from an alley, driveway or building shall stop such vehicle immediately prior to driving onto a sidewalk or onto the sidewalk area extending across any alleyway or driveway and shall yield the right-of-way to any pedestrian as may be necessary to avoid collision, and upon entering the roadway shall yield the right-of-way to all vehicles approaching on the roadway. (Prior Code, Chapter 20)

State Law Reference: Similar provisions, 47 O.S. Sec. 11-704.

SECTION 15-811 OBSTRUCTING INTERSECTION OR CROSSWALK.

No driver shall enter an intersection or a marked crosswalk unless there is sufficient space on the other side of the intersection or crosswalk to accommodate the vehicle he is operating without obstructing the passage of other vehicles or pedestrians, notwithstanding any traffic-control signal indication to proceed.

CHAPTER 9

TURNING MOVEMENTS

Section 15-901	Method of turning generally and at intersections.
Section 15-902	Authority to place turning markers.
Section 15-903	Authority to restrict turning; obedience required.
Section 15-904	Limitations on turns, U-turns.
Section 15-905	Turning or stopping movements; signals required.
Section 15-906	Signals; method required.
Section 15-907	Method of giving hand signals.

SECTION 15-901 METHOD OF TURNING GENERALLY AND AT INTERSECTIONS.

A. The driver of a vehicle intending to turn at an intersection shall do so as follows:

1. Right turns. Both the approach for a right turn and a right turn shall be made as close as practicable to the right-hand curb or edge of the roadway;

2. Left turns on two-way roadways. At any intersection where traffic is permitted to move in both directions on each roadway entering the intersection, an approach for a left turn shall be made in that portion of the right half of the roadway nearest the center line thereof and by passing to the right of such center line where it enters the intersection; and after entering the intersection, the left turn shall be made so as to leave the intersection to the right of the center line of the roadway being entered. Whenever practicable, the left turn shall be made in that portion of the intersection to the left of the center of the intersection; and

3. Left turns on other than two-way roadways. At any intersection where traffic is restricted to one direction on one or more of the roadways, the driver of a vehicle intending to turn left at any such intersection shall approach the intersection in the extreme left-hand lane lawfully available to traffic moving in the direction of travel of such vehicle. After entering the intersection, the left turn shall be made so as to leave the intersection, as nearly as practicable, in the left-hand lane lawfully available to traffic moving in such direction upon the roadway being entered.

B. No person shall turn a vehicle at an intersection unless the vehicle is in proper position upon the roadway as required by this section, or turn a vehicle to enter a private road or driveway, or otherwise turn a vehicle from a direct course or move right or left upon a roadway, unless and until such movement can be made with reasonable safety. (Prior Code, Chapter 20)

State Law Reference: Similar provisions, 47 O.S. Sec. 11-601.

SECTION 15-902 AUTHORITY TO PLACE TURNING MARKERS.

A. The city administrator, subject to direction by the council, is authorized to have placed markers, buttons or signs within or adjacent to intersections indicating the course to be traveled by vehicles turning at such intersections. Such course to be traveled shall be indicated.

B. When authorized markers, buttons or other indications are placed within an intersection indicating the course to be traveled by vehicles turning thereat, no driver of a vehicle

shall disobey the directions of such indications. (Prior Code, Chapter 20)

SECTION 15-903 AUTHORITY TO RESTRICT TURNING; OBEDIENCE REQUIRED.

A. The city administrator, subject to direction by the council, may determine those intersections at which drivers of vehicles shall not make a right turn, left turn or U-turn, and shall have placed proper signs at such intersections. The making of such turns may be prohibited between certain hours of any day and permitted at other hours.

B. Whenever authorized signs are erected indicating that no right turn, left turn or U-turn is permitted, no driver of a vehicle shall disobey the directions of any such sign. (Prior Code, Chapter 20)

SECTION 15-904 LIMITATIONS ON TURNING, U-TURNS.

A. Except as hereinafter provided, no person shall operate a vehicle so as to turn more than ninety degrees (90°) on any street or highway.

B. Persons excepted are those who can safely execute that turn if at an intersection, but it is unlawful for the driver of a vehicle to make such a turn at any intersection:

1. Where traffic-control signals are installed;

2. Where a police officer is directing traffic except at the latter's direction; or

3. Where an official no U-turn sign has been placed and is maintained.

(Prior Code, Chapter 20)

SECTION 15-905 TURNING OR STOPPING MOVEMENTS; SIGNALS REQUIRED.

A. No person shall turn a vehicle at an intersection unless the vehicle is in proper position upon the roadway as required by ordinance, or turn a vehicle to enter a private road or driveway, or otherwise turn a vehicle from a direct course or move right or left upon a roadway, or otherwise turn a vehicle from a direct course or move right or left upon a roadway unless and until such movement can be made with reasonable safety. No person shall turn any vehicle without giving an appropriate signal in the manner hereinafter provided in the event any other traffic may be affected by such movement.

B. A signal of intention to turn right or left when required shall be given continuously during not less than the last one hundred (100) feet traveled by the vehicle before turning.

C. No person shall stop or suddenly decrease the speed of a vehicle without first giving an appropriate signal in the manner provided herein to the driver of any vehicle immediately to the rear when there is opportunity to give such signal. (Prior Code, Chapter 20)

State Law Reference: Similar provisions, 47 O.S. Sec. 11-604.

SECTION 15-906 SIGNALS; METHOD REQUIRED.

A. Any stop or turn signal, when required herein, shall be given either by means of the hand and arm or by signal lamps, except as otherwise provided in Subsection B.

B. Any motor vehicle in use on a highway shall be equipped with, and required signal shall be given by, signal lamps when the distance from the center of the top of the steering post to the left outside limit of the body, cab or load of such motor vehicle exceeds twenty-four (24) inches, or when the distance from the center of the top of the steering post to the rear limit of the body or load thereof exceeds fourteen (14) feet. The latter measurement shall apply to any single vehicle and to any combination of vehicles. (Prior Code, Chapter 20)

SECTION 15-907 METHOD OF GIVING HAND SIGNALS.

All signals herein required given by hand and arm shall be given from the left side of the vehicle in the following manner:

1. Left turn: Hand and arm extended horizontally;

2. Right turn: Hand and arm extended upward; and

3. Stop or decrease speed: Hand and arm extended downward.

(Prior Code, Chapter 20)

State Law Reference: Similar provisions, 47 O.S. Secs. 11-605, 11-606.

CHAPTER 10

ONE-WAY STREETS AND ALLEYS

Section 15-1001 Authority to designate one-way streets.
Section 15-1002 One-way streets; direction of traffic.
Section 15-1003 Rotary traffic islands.

SECTION 15-1001 AUTHORITY TO DESIGNATE ONE- WAY STREETS.

The city council, by resolution, may designate any street or alley or part thereof as a one-way street or alley. Signs indicating the direction of lawful traffic movement shall be placed at every intersection where movement of traffic in the opposite direction is prohibited. (Prior Code, Chapter 20)

SECTION 15-1002 ONE-WAY STREETS; DIRECTION OF TRAFFIC.

Upon those streets and parts of streets in those alleys and parts of alleys designated as one-way streets and alleys, vehicular traffic shall move only in the indicated direction when signs indicating the direction of traffic are erected and maintained at every intersection where movement in the opposite direction is prohibited. (Prior Code, Chapter 20)

SECTION 15-1003 ROTARY TRAFFIC ISLANDS.

A vehicle passing around a rotary traffic island shall be driven only to the right of such island. (Prior Code, Chapter 20)

CHAPTER 11

TRUCK ROUTES AND PARKING

Section 15-1101	Truck routes, map, multiple citations, impoundment.
Section 15-1102	Permits required for operation on certain streets.
Section 15-1103	Truck parking restricted in residential subdivisions.
Section 15-1104	LPG restrictions.
Section 15-1105	Compliance with state law.
Section 15-1106	Trucks transporting flammable liquids, hazardous materials not to be left unattended more than 15 minutes.

SECTION 15-1101 TRUCK ROUTES, MAP, MULTIPLE CITATIONS, IMPOUNDMENT.

A. The council, by motion or resolution, may prescribe routes through the city for the use of trucks in general or trucks of particular kinds or other vehicles which are not ordinary private passenger vehicles passing through the city. The city shall see that appropriate and adequate signs are placed along such routes so that drivers of such vehicles may follow the routes.

B. The council, by motion or resolution, may prescribe certain streets and roads in the city for restricted travel and limit any truck having more than two (2) axles from travel on certain designated roads and streets. Restrictions shall not apply to trucks making local deliveries or picking up materials or merchandise on the street so restricted, nor will it apply to agricultural equipment or vehicles using the roads for agricultural purposes.

C. When such signs are so erected and in place as provided in Subsection A hereof, the driver of a truck or other vehicle for which a route has been prescribed as provided herein, while passing through the city, shall keep on such route and shall not deviate therefrom except in case of emergency. Drivers of such vehicles shall follow such routes so far as practicable also when driving within the city and not merely through the city. When signs are erected and in place restricting trucks with two (2) or more axles as provided in Subsection B hereof, no driver of such vehicle shall drive on the street so designated.

D. The city clerk shall keep and maintain accurate maps setting out the truck routes designated by the city. (Prior Code, Chapter 20)

SECTION 15-1102 PERMITS REQUIRED FOR OPERATION ON CERTAIN STREETS.

A. No person, except in case of emergency, shall drive or operate a bus or truck larger than a one and one-half (1 1/2) ton truck upon any minor or collector street without a permit issued by the city.

B. The city clerk shall issue a permit as provided herein upon application and approval by the city administrator or his designee. A fee shall be charged and collected for such permit which shall state the time and street upon which the vehicle is to be operated. A permit is valid only for the date and time issued.

SECTION 15-1103 TRUCK PARKING RESTRICTED IN RESIDENTIAL SUBDIVISIONS.

A. As used in this section:

1. "Bus" means any vehicle designed for carrying more than eighteen (18) passengers and used for the transportation of persons; and every motor vehicle, other than a taxicab, designed and used for the transportation of persons for compensation excluding school buses owned and operated by public or private schools or school districts and church buses from 6:00 A.M. to 6:00 P.M.; and

2. "Truck" means any truck above one ton capacity or truck-tractor with or without semitrailer or poletrailer attached or any other combination of vehicles.

B. It is unlawful for any truck or bus to be parked or stored on public or private property within an area zoned for residential use or in other zoning districts within three hundred (300) feet of residential subdivisions except for purposes of loading and unloading.

C. The following trucks or buses are exempt from the three-hundred foot restriction in Subsection B hereof:

1. Those used in businesses lawfully established within the city's commercial or industrial zoning districts;

2. Those used for farming by the owner or occupant in agricultural zoning districts; or

3. Buses operated by schools and churches within residential zones.

SECTION 15-1104 LPG PROHIBITIONS.

It is unlawful for any person to drive a liquefied petroleum or hazardous material truck whether empty or loaded in the city. Liquefied petroleum or hazardous material trucks may be driven on through streets as designated by the city, but may not be parked for any purpose on any public street in the city. No truck, trailer, storage building or any other structure containing hazardous materials in bottles, buckets, barrels or any other container may be parked for any purpose on a public street in the city. Such hazardous materials may be removed at the expense of the owner, by the city administrator or designee, to storage in a proper location until the city judge shall direct that such hazardous materials be returned to the rightful owner or otherwise disposed of as provided by law.

SECTION 15-1105 COMPLIANCE WITH STATE LAW.

All persons owning liquefied petroleum gas or hazardous material trucks shall comply with all state laws, the city liquefied petroleum gas regulations, and have in force adequate public liability and property damage insurance.

Cross Reference: City liquefied petroleum gas regulations, see Part 5 of this code.

SECTION 15-1106 TRUCKS TRANSPORTING FLAMMABLE LIQUIDS, HAZARDOUS MATERIALS NOT TO BE LEFT UNATTENDED MORE THAN 15 MINUTES.

It is unlawful for any person to park a truck or vehicle transporting explosives, gasoline or other flammable liquids, combustible liquids or hazardous materials and to leave the same unattended within the city. Such truck or vehicle may be left parked within an agricultural district or may be parked unattended on any street or alley only for an emergency and then only for a period of time not to exceed fifteen (15) minutes. Such a truck shall in no way obstruct traffic using the street or alley.

CHAPTER 12

LOADING ZONES

Section 15-1201 Authority to designate curb loading zones.
Section 15-1202 Parking or standing in passenger loading zone restricted.
Section 15-1203 Standing or parking in freight loading zones.
Section 15-1204 Permit to back to curb for loading or unloading.

SECTION 15-1201 AUTHORITY TO DESIGNATE CURB LOADING ZONES.

The city administrator, subject to direction of the council, may determine the location of passenger and freight curb loading zones, and shall have placed and maintained appropriate signs indicating the same and stating the hours during which the provisions of this section are applicable. (Prior Code, Chapter 20)

SECTION 15-1202 PARKING OR STANDING IN PASSENGER LOADING ZONE RESTRICTED.

No person shall stop, stand or park a vehicle for any purpose or period of time other than for the expeditious loading or unloading of passengers in any place marked as a passenger curb loading zone during hours when the regulations applicable to such curb loading zone are effective, and then only for period not to exceed three (3) minutes. (Prior Code, Chapter 20)

SECTION 15-1203 STANDING OR PARKING IN FREIGHT LOADING ZONES.

A. No person shall stop, stand or park a vehicle for any purpose or length of time other than for the expeditious unloading and delivery or pickup and loading of materials in any place marked as a freight curb loading zone during hours when the provisions applicable to such zones are in effect. In no case shall the stop for loading or unloading of materials exceed thirty (30) minutes.

B. The driver of a passenger vehicle may stop temporarily at a place marked as a freight curb loading zone for the purpose of and while actually engaged in loading or unloading passengers when such stopping does not interfere with any motor vehicle used for the transportation of materials which is waiting to enter or about to enter such zone. (Prior Code, Chapter 20)

SECTION 15-1204 PERMIT TO BACK TO CURB FOR LOADING OR UNLOADING.

A. The city administrator is authorized to issue special permits to permit the backing of a vehicle to the curb for the purpose of loading or unloading merchandise or materials subject to the terms and conditions of such permit. Such permits may be issued either to the owner or lessee of real property or to the owner of the vehicle and shall grant to such person the privilege as therein stated and authorized herein. The traffic engineer may revoke such permits at any time.

B. It is unlawful for any permittee or other person to violate any of the special terms or conditions of any permit issued under this section. (Prior Code, Chapter 20)

CHAPTER 13

PUBLIC CARRIER STOPS

Section 15-1301 Authority to designate public carrier stops.
Section 15-1302 Bus stops; restrictions.
Section 15-1303 Taxi stands; loading passengers.
Section 15-1304 Restricted use of bus and taxicab stands.

SECTION 15-1301 AUTHORITY TO DESIGNATE PUBLIC CARRIER STOPS.

The city administrator, subject to direction of the council, may establish bus stops, stands, taxicab stands and stands for other passenger common carrier motor vehicles on such public streets in such places and in such manner as it determines to be of the greatest benefit and convenience to the public. Every such bus stop, bus stand, taxicab stand or other stand shall be designated by appropriate signs. (Prior Code, Chapter 20)

SECTION 15-1302 BUS STOPS; RESTRICTIONS.

A. The operator of a bus shall not stand or park such vehicle upon any street at any place other than a bus stand.

B. The operator of a bus shall not stop such vehicle upon any street at any place for the purpose of loading or unloading passengers or their baggage other than at a bus stop, bus stand or passenger loading zone so designated, except in case of an emergency.

C. The operator of a bus shall enter a bus stop, bus stand or passenger loading zone on a public street in such a manner that the bus, when stopped to load or unload passengers or baggage, shall be in a position with the right front wheel of such vehicle not further than eighteen (18) inches from the curb and the bus approximately parallel to the curb so as not to unduly impede the movement of other vehicular traffic. (Prior Code, Chapter 20)

SECTION 15-1303 TAXI STANDS; LOADING PASSENGERS.

The operator of a taxicab shall not stand or park such vehicle upon any street at any place than in a taxicab in a taxicab stand so designated. This section shall not prevent the operator of a taxicab from temporarily stopping in accordance with other stopping or parking regulations at any place for the purpose of and while actually engaged in the expeditious loading or unloading of passengers. (Prior Code, Chapter 20)

SECTION 15-1304 RESTRICTED USE OF BUS AND TAXICAB STANDS.

No person shall stop, stand or park a vehicle other than a bus in a bus stop, or other than a taxicab in a taxicab stand, when any such stop or stand has been officially designated and appropriately signed; except that the driver of a passenger vehicle may temporarily stop therein for the purpose of and while actually engaged in loading or unloading passengers when such stopping does not interfere with any bus or taxicab waiting to enter such zone. (Prior Code, Chapter 20)

CHAPTER 14

ACCIDENTS

Section 15-1401	Accidents involving death or personal injury.
Section 15-1402	Accidents involving damage to property.
Section 15-1403	Duty to give information and render aid.
Section 15-1404	Duty upon striking unattended vehicle.
Section 15-1405	Duty upon striking fixtures upon a highway.
Section 15-1406	Immediate notice of accident.
Section 15-1407	When driver unable to report.

SECTION 15-1401 ACCIDENTS INVOLVING DEATH OR PERSONAL INJURY.

The driver of any vehicle involved in an accident resulting in injury to or death of any person shall immediately stop such vehicle at the scene of such accident or as close thereto as possible but shall then forthwith return to and in every event shall remain at the scene of the accident until he has fulfilled the requirements of Section 15-1403 of this code. (Prior Code, Chapter 20)

SECTION 15-1402 ACCIDENTS INVOLVING DAMAGE TO PROPERTY.

A. The driver of any vehicle involved in an accident resulting only in apparent damage to property shall immediately stop such vehicle at the scene of such accident or as close thereto as possible. The driver shall remain at the scene of such accident until he has fulfilled the requirements of Section 15-1403 of this code. Every such stop shall be made without obstructing traffic more than is necessary. Any person failing to stop or comply with the requirements under such circumstances shall be guilty of a misdemeanor.

B. If the damage resulting from such accident is to the property of the driver only, with no damage to the person or property of another, the driver need not stop at the scene of the accident but shall make report of the damage resulting.

SECTION 15-1403 DUTY TO GIVE INFORMATION AND RENDER AID.

The driver of any vehicle involved in an accident resulting in injury to or death of any person or damage to any vehicle which is driven or attended by any person shall give his correct name, address and registration number of the vehicle he is driving, and shall upon request and if available exhibit his operator's or chauffeur's license and his security verification form, as defined in this code, to the person struck or the driver or occupant of or person attending any vehicle collided with, and shall render to any person injured in such accident reasonable assistance, including the carrying, or the making of arrangements for the carrying, of such person to a physician, surgeon or hospital for medical or surgical treatment if it is apparent that such treatment is necessary or if such carrying is requested by the injured person. (Prior Code, Chapter 20)

State Law Reference: Similar provisions, 47 O.S. Sec. 10-104.

Cross Reference: Security verification form, See Sec. 15-103 of this code.

SECTION 15-1404 DUTY UPON STRIKING UNATTENDED VEHICLE.

The driver of any vehicle which collides with any vehicle which is unattended shall immediately stop and shall then and there either locate and notify the operator or owner of such vehicle of the correct name and address of the driver and owner of the vehicle striking the unattended vehicle, and provide the operator or owner with information from his security verification form, as defined in this code, or shall leave in a conspicuous place in the vehicle struck a written notice giving the name and address of the driver and of the owner of the vehicle doing the striking, and providing information from his security verification form, as defined by this code, and a statement of the circumstances thereof. (Prior Code, Chapter 20)

SECTION 15-1405 DUTY UPON STRIKING FIXTURES UPON A HIGHWAY.

The driver of any vehicle involved in an accident resulting only in damage to fixtures or other property legally upon or adjacent to a highway shall take reasonable steps to locate and notify the owner or person in charge of such property of such fact and of his name and address and of the registration number of the vehicle he is driving and shall upon request and if available exhibit his operator's or chauffeur's license and his security verification form, as defined in this code, and shall make report of such accident when and as required in Section 15-1407 of this code.

SECTION 15-1406 IMMEDIATE NOTICE OF ACCIDENT.

The driver of a vehicle involved in any accident shall immediately, by the quickest means of communication, give notice of such accident to the police department, on forms provided by the police department, after complying with the requirements of Section 15-1403 of this code. A report shall be made on forms provided by the department. Where personal injury or death occurs, the driver or drivers of the vehicles shall remain at the scene of the accident until police officers arrive, except in cases of personal injury requiring immediate attention.

Cross Reference: False reports, penalty for making, see Part 10 of this code.

SECTION 15-1407 WHEN DRIVER UNABLE TO REPORT.

A. An accident report is not required under this chapter from any person who is physically incapable of making report during the period of such incapacity.

B. Whenever the driver of a vehicle is physically incapable of giving an immediate notice of an accident as required in Section 15-1406 of this code and there was another occupant in the vehicle at the time of the accident capable of doing so, such occupant shall make or cause to be given the notice not given by the driver.

CHAPTER 15

MOTORCYCLES

Section 15-1501 Operation of motorcycle.
Section 15-1502 Equipment required.
Section 15-1503 Headgear required.
Section 15-1504 License required.
Section 15-1510 Operation of minibikes, golf carts, all terrain vehicles and utility vehicles on public streets.

SECTION 15-1501 OPERATION OF MOTORCYCLE.

A. No person shall operate a motorcycle or motor-driven cycle, including a motor scooter or motor-driven bicycle, on a street in this city during a time when state law prohibits the operation of such vehicle.

B. No driver of a three-wheel motor vehicle or motor driven bicycle shall carry any other person on, upon or within such vehicle on any street in the city, except as hereinafter provided. If any two-or three-wheel motor vehicle with a wheel diameter of twelve (12) inches or greater or any bicycle shall have either a double seating device with double foot rests or a side car attachment providing a separate seat space within such side car attachment for each person riding therein so that such person shall be seated entirely within the body of the side car, it shall be permissible for an operator who has attained the age of sixteen (16) or older to carry a passenger. A demonstration ride by a licensed dealer or his employee is excepted from the provisions hereof.

C. No motorcycle or motor scooter shall be ridden upon any sidewalk.

D. Handlebars on motorcycles and motor scooters shall not exceed twelve (12) inches in height, measured from the crown or point of attachment.

E. No rider of a motorcycle or motor scooter shall hold to any moving vehicle for the purpose of being propelled.

F. No driver of a motorcycle, motor scooter or bicycle shall pass other vehicles between lanes of traffic traveling in the same direction, authorized emergency vehicles excepted.

G. No person shall operate any motorcycle or any motor scooter at a speed greater than the speed limit legally posted. In no event nor at any time may an operator under the age of sixteen (16) years operate a motorcycle or motor scooter at a speed greater than thirty-five (35) miles per hour.

H. A person operating a motorcycle or motor-driven cycle shall ride only on the permanent and regular seat attached thereto. (Prior Code, Chapter 20)

State Law Reference: Similar provisions 47 O.S. Secs. 11-805, 11-1103.

SECTION 15-1502 EQUIPMENT REQUIRED.

The following equipment shall be required on all motorcycles and all motor scooters on actual trail rides conducted outside of public streets, roads and highways:

1. Rear-view mirrors: All vehicles covered under this chapter shall be equipped with two (2) mirrors, containing a reflection surface of not less than three (3) inches in diameter, mounted one on each side of the vehicle and positioned so as to enable the operator to clearly view the roadway for a distance of two hundred (200) feet to the rear of his vehicle;

2. Windshield: All vehicles covered under this section shall be equipped with a windshield of sufficient quality, size and thickness to protect the operator from foreign objects, except that in lieu of such windshield the operator shall wear goggles or face shield of material and design to protect him from foreign objects;

3. Brakes: All vehicles covered under this chapter shall be equipped with brakes adequate to control the movement of same to stop and hold such vehicles, including two (2) separate means of applying the brakes, one of which is effective to apply the brakes to the front wheel and one of which is effective to apply the brakes to the rear wheels. All such vehicles shall be equipped with a stop lamp on the rear of the vehicle which shall display a red or amber light, or any shade of color between red and amber, visible from a distance of not less than one hundred (100) feet to the rear in normal sunlight, and which shall be actuated upon application of the service brake;

4. Speedometer: All vehicles covered under this chapter shall be equipped with a properly operating speedometer capable of registering at least the maximum legal speed limit for the vehicle;

5. Fender: All vehicles covered under this chapter shall be equipped with a fender over each wheel. All fenders shall be of the type provided by the manufacturer;

6. Lights: All vehicles covered under this chapter shall carry at least one lighted head lamp capable of showing a white light visible at least three hundred (300) feet in the direction in which the same are proceeding, and one tail lamp mounted in the rear which, when lighted, shall omit a red light plainly visible from at least three hundred (300) feet to the rear; and such lights required by this chapter shall be burning whenever such vehicles are in motion during the period from one-half (1/2) hour after sunset and one-half (1/2) hour before sunrise and at any other time when, due to insufficient light or unfavorable atmospheric conditions, persons and vehicles on the streets are not clearly discernible at a distance of at least five hundred (500) feet ahead;

7. All vehicles covered under this section shall carry on the rear thereof, either as a part of the tail light or separately, at least one red reflector which shall be of such size and characteristics as to be visible at night from all distances within three hundred fifty (350) feet to one hundred (100) feet from the vehicle when directly in front of lawful upper beams of headlights on motor vehicles;

8. Muffler. No person shall operate a vehicle covered under this section with an exhaust system modified so that motor noise is increased greater than that of the original muffler equipment provided by the manufacturer of the vehicle.

(Prior Code, Chapter 20)

State Law Reference: Equipment required, 47 O.S. Secs. 12-203, 12-205, 12-206, and 12-301.

SECTION 15-1503 HEADGEAR REQUIRED.

No person under eighteen (18) years of age shall operate or ride upon any vehicle covered under this chapter unless such person is equipped with and wearing on the head a crash helmet of a type and design manufactured for such use. All crash helmets shall consist of lining, padding and chin straps and be of the type as not to distort the view of the driver. (Prior Code, Chapter 20)

SECTION 15-1504 LICENSE REQUIRED.

All operators of motorcycle or motor-driven cycle shall have a current, valid license issued by the state and conform to any specific restriction contained thereon (Prior Code, Chapter 20)

SECTION 15-1510 OPERATION OF MINIBIKES, GOLF CARTS, ALL TERRAIN VEHICLES AND UTILITY VEHICLES ON PUBLIC STREETS.

A. The self-propelled or motor-driven and operated vehicles described in this section shall be prohibited from operating or shall be limited in operation on the streets and highways of this City except as herein provided. All vehicles described in this Ordinance shall have the same definition as those contained within Title 47 Oklahoma Statutes.

B. Self-propelled or motor-driven cycles, known and commonly referred to as "minibikes" and other similar trade names, shall be prohibited from operating on the streets and highways of this City, except:

1. When used in a parade; or

2. When registered, as required by subsection E of Section 1151 of Title 47 Oklahoma Statutes, and operated by food vendor services upon streets having a speed limit of thirty (30) miles per hour or less.

C. Golf carts shall not be operated on the streets and highways of this City except:

1. Golf Carts may operate on City Streets of the City of Piedmont only during daylight hours and under the following conditions:

   a. the roadway has a posted speed limit of twenty-five (25) miles per hour or less,

   b. appropriate signage, cautioning motorists of the possibility of golf cart traffic, is erected by the City.

2. Golf carts may operate on state highways only if making a perpendicular crossing of a state highway located within the boundaries of Piedmont

D. Utility vehicles shall not be operated on the streets and highways of this City, except as follows:

1. Utility vehicles may be operated on streets and highways within the City under the following conditions:

   a. only on streets with a speed limit posted at 45 mph or less.

   b. the vehicle must be a utility type vehicle with side by side seating

   c. all passengers must wear approved seat belts.

d. the utility vehicles must be equipped with a full windshield, hydraulic brakes, headlights, tail lights, brakelights, turn signals, horn, rear view mirror, speedometer, capable of sustained 45 mph operation.

e. the operator of the utility vehicle shall hold a valid vehicle operator's license and must have proof of liability insurance on the vehicle which shall be carried on the vehicle or on the person of the operator.

2. All-terrain vehicles shall not be operated on the streets and highways of this City, except:

a. On unpaved roads which are located within the boundaries of any property of the Forest Service of the United States Department of Agriculture;

b. On public streets and highways if:

(i) the vehicle needs to make a direct crossing of the street or highway while the vehicle is traveling upon a regularly traveled trail and needs to continue travel from one area of the trail to another and, if the vehicle comes to a complete stop, yields the right-of-way to all oncoming traffic that constitutes an immediate hazard, and crosses the street or highway at an angle of approximately ninety (90) degrees to the direction of the street or highway. This exception shall not apply to divided highways or streets or highways with a posted speed limit of more than thirty-five (35) miles per hour in the area of the crossing,

(ii) the vehicle needs to travel on a public street or highway in order to cross a railroad track. In that event, the all-terrain vehicle or utility vehicle may travel for not more than three hundred (300) feet on a public street or highway to cross a railroad track,

(iii) the operator of the all-terrain vehicle or utility vehicle making the crossing at a street or highway has a valid driver license, and

(iv) the operator of the vehicle makes a crossing on a street or highway during daylight hours only;

E. Violation of any provision of this Ordinance is an offense with a maximum penalty of $25 including court costs.

CHAPTER 16

BICYCLES

Section 15-1601	Effects of regulations; parent's duty.
Section 15-1602	Applicability of traffic laws.
Section 15-1603	Obedience to traffic-control devices.
Section 15-1604	Manner of riding bicycle.
Section 15-1605	Riding on roads and bicycle paths.
Section 15-1606	Speed restrictions.
Section 15-1607	Carrying articles.
Section 15-1608	Parking.
Section 15-1609	Riding on sidewalk prohibited.
Section 15-1610	Lights and brakes.
Section 15-1611	Rider not to cling to other vehicle.
Section 15-1612	Signal devices.
Section 15-1613	Emerging from alley, driveway or building.
Section 15-1614	Dealers to report.
Section 15-1615	Penalty.

SECTION 15-1601 EFFECTS OF REGULATIONS; PARENT'S DUTY.

A. The parent of any child and the guardian of any ward shall not authorize or knowingly permit any child or ward to violate any of the provisions of this chapter.

B. These regulations applicable to bicycles shall apply whenever a bicycle is operated upon any highway or upon any path set aside for the exclusive use of bicycles, subject to the exceptions stated herein. (Prior Code, Chapter 20)

State Law Reference: Operating bicycles on streets, 47 O.S. Secs. 11-1201 et seq.

SECTION 15-1602 APPLICABILITY OF TRAFFIC LAWS.

Every person riding a bicycle upon a roadway shall be granted all of the rights and shall be subject to all of the duties applicable to the driver of a vehicle by the laws of this state declaring rules and or road applicable to the driver of a vehicle, except as to special regulations in this chapter and except as to those provisions of laws and ordinances which by their nature can have no application. (Prior Code, Chapter 20)

SECTION 15-1603 OBEDIENCE TO TRAFFIC-CONTROL DEVICES.

A. Any person operating a bicycle shall obey the instructions of official traffic-control signals, signs and other control devices applicable to vehicles, unless otherwise directed by a police officer.

B. Whenever authorized, signs are erected indicating that no right turn, left turn or U-turn is permitted, no person operating a bicycle shall disobey the direction of any such sign except where such person dismounts from the bicycle to make such turn, in which event such person shall then obey the regulations applicable to pedestrians. (Prior Code, Chapter 20)

SECTION 15-1604 MANNER OF RIDING BICYCLE.

A. A person propelling a bicycle shall not ride other than astride a permanent and regular seat attached thereto.

B. No bicycle shall be used to carry more persons at one time than the number for which it is designed and equipped.

C. A person shall ride a bicycle only in the manner in which it is designed and equipped to carry the person. (Prior Code, Chapter 20)

SECTION 15-1605 RIDING ON ROADS AND BICYCLE PATHS.

A. Every person operating a bicycle upon a roadway shall ride as near to the right side of the roadway as practicable, exercising due care when passing a standing vehicle or one proceeding in the same direction.

B. Persons riding bicycles upon a roadway shall not ride more than two (2) persons abreast except on paths or parts of roadways set aside exclusively for the use of bicycles.

C. Wherever a usable path for bicycles has been provided adjacent to a roadway, bicycle riders shall use such path and shall not use the roadway. (Prior Code, Chapter 20)

SECTION 15-1606 SPEED RESTRICTIONS.

No person shall operate a bicycle at a speed greater than is reasonable and prudent under the conditions then existing. (Prior Code, Chapter 20)

SECTION 15-1607 CARRYING ARTICLES.

No person operating a bicycle shall carry any package, bundle or chapter which prevents the rider from keeping at least one hand upon the handlebars. (Prior Code, Chapter 20)

SECTION 15-1608 PARKING.

No person shall park a bicycle upon a street other than upon the roadway against the curb or upon the sidewalk in a rack to support the bicycle or against a building or at the curb, in such manner as to afford the least obstruction to pedestrian traffic. (Prior Code, Chapter 20)

SECTION 15-1609 RIDING ON SIDEWALK PROHIBITED.

A. No person shall ride a bicycle upon a sidewalk in the business district.

B. Whenever a person is riding a bicycle upon a sidewalk, such person shall yield the right-of-way to any pedestrian and shall give audible signal before overtaking and passing the pedestrian.

C. The city administrator may erect signs on any sidewalk or roadway prohibiting the riding of bicycles thereon. When such signs are in place, no person shall disobey them. (Prior Code, Chapter 20)

SECTION 15-1610 LIGHTS AND BRAKES.

A. Every bicycle in use at nighttime shall be equipped with a lamp on the front which shall emit a white light visible from a distance of at least five hundred (500) feet to the front and with a red reflector on the rear of a type which shall be visible from all distances from fifty (50) feet to three hundred (300) feet to the rear when directly in front of lawful upper beams of head lamps on a motor vehicle. A lamp emitting a red light visible from a distance of five hundred (500) feet to the rear may be used in addition to the red reflector.

B. Every bicycle shall be equipped with a brake which will enable the operator to make the braked wheel skid on dry, level, clean pavement. (Prior Code, Chapter 20)

SECTION 15-1611 RIDER NOT TO CLING TO OTHER VEHICLE.

No person riding upon any bicycle shall attach the same or himself to any vehicle upon a roadway. (Prior Code, Chapter 20)

State Law Reference: Similar provisions, 47 O.S. Sec. 11-1204.

SECTION 15-1612 SIGNAL DEVICES.

No person shall operate a bicycle unless it is equipped with a bell or other device capable of giving a signal audible for a distance of at least one hundred (100) feet, except that a bicycle shall not be equipped with nor shall any person use upon a bicycle any siren or whistle. (Prior Code, Chapter 20)

SECTION 15-1613 EMERGING FROM ALLEY, DRIVEWAY OR BUILDING.

The operator of a bicycle emerging from an alley, driveway or building shall, upon approaching a sidewalk or the sidewalk area extending across any alleyway, yield the right-of-way to all pedestrians approaching on the sidewalk or sidewalk area, and upon entering the roadway shall yield the right-of-way to all vehicles approaching on the roadway. (Prior Code, Chapter 20)

SECTION 15-1614 DEALERS TO REPORT.

Every person engaged in the business of buying or selling new or used bicycles shall make a report to the police department of every bicycle purchased or sold by such dealer, giving the name and address of the person from whom purchased or to whom sold, the name or make, the frame number thereof and the number of the license plate thereon, if any. Dealers buying a bicycle shall not be required to secure a license therefor, but may leave any existing license plate, if any, thereon until the bicycle is sold. A person purchasing a bicycle from a dealer for use shall secure a license as provided in this chapter. (Prior Code, Chapter 20)

SECTION 15-1615 PENALTY.

Every person convicted of a violation of any provision of this chapter shall be punished as provided in Section 1-108 of this code.

CHAPTER 17

PEDESTRIANS

Section 15-1701	Subject to traffic-control signals.
Section 15-1702	Right-of-way at crosswalks.
Section 15-1703	Pedestrians to use right half of crosswalk.
Section 15-1704	Crossing at right angles.
Section 15-1705	When pedestrians shall yield.
Section 15-1706	Prohibited crossing.
Section 15-1707	Obedience to railroad signals.
Section 15-1708	Walking along roadway.
Section 15-1709	Hitchhiking; soliciting business.
Section 15-1710	Drivers to exercise care.
Section 15-1711	Playing in streets.
Section 15-1712	Use of white cane; special provisions for blind pedestrians.

SECTION 15-1701 SUBJECT TO TRAFFIC-CONTROL SIGNALS.

Pedestrians shall be subject to traffic-control signals as declared in this chapter. At all other places, pedestrians shall be granted those rights and be subject to the restrictions stated in this chapter. (Prior Code, Chapter 20)

State Law References: Pedestrians' rights and duties, 47 O.S. Secs. 11-501 et seq.; power of city to require obedience to traffic-control signals, 47 O.S. Sec. 15-107.

SECTION 15-1702 RIGHT-OF-WAY AT CROSSWALKS.

A. When traffic-control signals are not in place or not in operation, the driver of a vehicle shall yield the right-of-way, slowing down or stopping if need be to so yield, to a pedestrian crossing the roadway within a crosswalk when the pedestrian is upon the half of the roadway upon which the vehicle is traveling, or when the pedestrian is approaching so closely from the opposite half of the roadway as to be in danger.

B. No pedestrian shall suddenly leave a curb or other place of safety and walk or run into the path of a vehicle which is so close that it is impossible for the driver to yield. (Prior Code, Chapter 20)

SECTION 15-1703 PEDESTRIANS TO USE RIGHT HALF OF CROSSWALK.

Pedestrians shall move, whenever practicable, upon the right half of crosswalks. (Prior Code, Chapter 20)

SECTION 15-1704 CROSSING AT RIGHT ANGLES.

No pedestrian shall cross a roadway at any place other than by route at right angles to the curb or by the shortest route to the opposite curb except in a crosswalk. (Prior Code, Chapter 20)

SECTION 15-1705 WHEN PEDESTRIANS SHALL YIELD.

A. Every pedestrian crossing a roadway at any point other than within a marked crosswalk or within an intersection shall yield the right-of-way to all vehicles upon the roadway.

B. Any pedestrian crossing a roadway at a point where a pedestrian tunnel or overhead pedestrian crossing has been provided shall yield the right-of-way to all vehicles upon the roadway.

C. This section shall not apply under the conditions stated in Section 15-1706 of this code when pedestrians are prohibited from crossing at certain designated places. (Prior Code, Chapter 20)

SECTION 15-1706 PROHIBITED CROSSING.

Between adjacent intersections at which traffic-control signals are in operation, pedestrians shall not cross at any place except in a crosswalk. (Prior Code, Chapter 20)

SECTION 15-1707 OBEDIENCE TO RAILROAD SIGNALS.

No pedestrian shall pass through, around, over or under any crossing gate or barrier at a railroad grade crossing while such gate or barrier is closed or is being opened or closed. (Prior Code, Chapter 20)

SECTION 15-1708 WALKING ALONG ROADWAY.

A. Where sidewalks are provided, no pedestrian shall walk along and upon an adjacent roadway.

B. Where sidewalks are not provided, any pedestrian walking along and upon a highway shall when practicable walk only on the left side of the roadway or its shoulder facing traffic which may approach from the opposite direction and shall yield to approaching vehicles. (Prior Code, Chapter 20)

State Law Reference: Similar provisions, 47 O.S., Sec. 11-506.

SECTION 15-1709 HITCHHIKING; SOLICITING BUSINESS.

A. No person shall stand in a roadway for the purpose of soliciting a ride, donation, employment or business from the occupant of any vehicle.

B. No person shall stand on or in proximity to a street or highway for the purpose of soliciting the watching or guarding of any vehicle while parked or about to be parked on a street or highway. (Prior Code, Chapter 20)

SECTION 15-1710 DRIVERS TO EXERCISE CARE.

Notwithstanding the provisions of this chapter, every driver of a vehicle shall exercise due care to avoid colliding with any pedestrian upon any roadway, shall give warning by sounding the horn when necessary and shall exercise proper precaution upon observing any child or any confused or incapacitated person upon a roadway. (Prior Code, Chapter 20)

SECTION 15-1711 PLAYING IN STREETS.

A. No person upon roller skates or riding in or by means of any coaster, toy vehicle or similar device shall go upon any roadway except while crossing a street on a crosswalk. When so crossing such person shall be granted all of the rights and shall be subject to all of the duties applicable to pedestrians.

B. This section shall not apply upon any street while set aside as a play street as authorized by this code.

SECTION 15-1712 USE OF WHITE CANE; SPECIAL PROVISIONS FOR BLIND PEDESTRIANS.

A. It is unlawful for any person not wholly or partially blind to carry or use upon the streets, highways or public places of the city any cane or walking stick which is white in color. The term "white in color," as used herein, means painted or enameled white and not an unpainted or natural wood color. Such white cane or walking stick may be used on the streets or in other public places of the city by persons wholly or partially blind as a means of identifying them to drivers or operators of vehicles and for the purpose of protecting them.

B. Blind pedestrians, by holding out horizontally a white cane in the direction they desire to travel over crosswalks on any street, avenue, alley or other public highway in this city shall be given the right-of-way over all other pedestrians and vehicles.

C. Any driver or operator of a vehicle who approaches, or comes into proximity of, a person wholly or partially blind carrying a white cane or walking stick shall immediately come to a full stop, if such person is in the path of, or about to enter, or approaching the path of, such vehicle, and shall take such precaution before proceeding as may be necessary to avoid accident or injury to such person so carrying a white cane or walking stick.

CHAPTER 18

ENFORCEMENT

Section 15-1801	Authority of police and fire officials.
Section 15-1802	Authority to direct traffic.
Section 15-1803	Emergency and experimental regulations.
Section 15-1804	Obedience to police and fire officials required.
Section 15-1805	Applicability to public employees.
Section 15-1806	Authorized emergency vehicles.
Section 15-1807	Persons working on streets exempted.
Section 15-1808	Closing streets for repairs; barricades required; use of street restricted.
Section 15-1809	Riding animals and animal-drawn vehicles.
Section 15-1810	Notification of runs by emergency vehicles.

SECTION 15-1801 AUTHORITY OF POLICE AND FIRE OFFICIALS.

A. It is the duty of all police officers of the police department to enforce the street traffic regulations of this city and the state, to make arrests for the traffic violations, and to investigate accidents.

B. Officers of the police department or such officers as are assigned by the chief of police are authorized to direct all traffic by voice, hand, mechanical signals or signs in conformance with the provisions of this chapter. In the event of a fire or other emergency as herein defined, or other unusual traffic conditions, to expedite traffic or safeguard pedestrians, officers of the police department or fire department may direct and take control of traffic as conditions may require, and as near as practicable, follow the general provisions of this chapter.

C. Officers of the fire department, when at the scene of a fire or other emergency, may direct or assist the police in directing traffic thereat or in the immediate vicinity. (Prior Code, Chapter 20)

SECTION 15-1802 AUTHORITY TO DIRECT TRAFFIC.

All traffic in the city shall be controlled by ordinances of the city and the laws of the state relating thereto. No person shall direct or attempt to direct traffic except police officers and other officers authorized by the city. (Prior Code, Chapter 20)

SECTION 15-1803 EMERGENCY AND EXPERIMENTAL REGULATIONS.

A. The city administrator is empowered to make effective the provisions of the traffic ordinances of this city and to make temporary or experimental regulations to cover emergencies or special conditions. No such temporary or experimental regulation shall remain in effect for more than ninety (90) days.

B. The city may have traffic-control devices tested under actual conditions of traffic. (Prior Code, Chapter 20)

SECTION 15-1804 OBEDIENCE TO POLICE AND FIRE OFFICIALS REQUIRED.

No person shall wilfully fail or refuse to comply with any lawful order or direction of a police officer or fire department official. (Prior Code, Chapter 20)

State Law Reference: Similar provisions, 47 O.S. Sec. 11-103.

Cross Reference: See also Part 10 of this code on obedience, cooperation and non-interference with police and fire officials.

SECTION 15-1805 APPLICABILITY TO PUBLIC EMPLOYEES.

A. This chapter shall apply to the driver of any vehicle owned by or used in the service of the United States government, any state, county, city or other governmental unit or agency, as well as to other vehicles. No such driver shall violate any of the provisions of this chapter, except as otherwise permitted in this chapter or by state statute.

B. This chapter shall not apply to the military forces of the United States and organizations of the National Guard when performing any military duty. (Prior Code, Chapter 20)

SECTION 15-1806 AUTHORIZED EMERGENCY VEHICLES.

A. The driver of an authorized emergency vehicle, when responding to an emergency call or when in the pursuit of an actual or suspected violator of the law or ordinance or when responding to but not upon returning from a fire alarm, amy exercise the privileges set forth in this section, but subject to the conditions herein stated.

B. The driver of an authorized emergency vehicle may:

1. Park or stand irrespective of the provisions of this chapter;

2. Proceed past a red or stop signal or stop sign, but only after slowing down as may be necessary for safe operation;

3. Exceed the maximum speed limits so long as he does not endanger life or property; and

4. Disregard regulations governing direction of movement or turning in specific directions.

C. The exemptions herein granted to an authorized emergency vehicle shall apply only when the driver of any such vehicle is making use of audible and visual signals as required by law, except that an authorized emergency vehicle operated as a police vehicle need not be equipped with or display a red light visible from in front of the vehicle.

D. The operator of every authorized emergency vehicle, prior to commencing an emergency run, must report to the police department and advise the police department of his destination; and if such a hazard exists as would endanger the public, the police department shall have the authority to prohibit the emergency run.

E. This section shall not relieve the driver of an authorized emergency vehicle from the duty to drive with due regard for the safety of all persons, nor protect the driver from the consequences of his reckless disregard for all the safety of others. (Prior Code, Chapter 20)

State Law Reference: Similar provisions, Sec. 11-106; required emergency vehicle signals, procedures, 47 O.S. Sec. 12-218)

SECTION 15-1807 PERSONS WORKING ON STREETS EXEMPTED.

A. Unless specifically made applicable, the provisions of this chapter shall not apply to persons, teams, motor vehicles and other equipment while actually engaged in work upon the surface of a street, or to persons, motor vehicles and other equipment while actually engaged in construction, maintenance or repair of public utilities. All highway and public utility operations shall be protected by adequate warning signs, signals, devices or flagmen.

B. This section shall not relieve any driver exempted by this section from the duty to drive with due regard for the safety of all persons, nor from the consequences of driving while intoxicated. (Prior Code, Chapter 20)

State Law Reference: Similar provisions, 47 O.S. Sec. 11-105.

SECTION 15-1808 CLOSING STREETS FOR REPAIRS; BARRICADES REQUIRED; USE OF STREET RESTRICTED.

A. City personnel or contractors, while repairing or improving or repairing lines or other utility facilities in the streets, are authorized as necessary, subject to control of the chief of the traffic division, to close any street or section thereof to traffic during such repair, maintenance or construction. In exercising such authority, such person shall erect or cause to be erected proper control devices and barricades to warn and notify the public that the street has been closed to traffic.

B. When any street has been closed to traffic under the provisions of Subsection A of this section, and traffic-control devices or barricades have been erected, no person shall drive any vehicle through, under, over or around such traffic-control devices or barricades, or otherwise enter the closed area. This subsection shall not apply to persons while engaged in such construction, maintenance and repair or to persons entering therein for the protection of lives or property. Persons having their places of residence or places of business within the closed area may travel, when possible to do so, through the area at their own risk.

C. Whenever construction, repair or maintenance of any street or utility line or facility is being performed under traffic, the city personnel, contractor, utility company concerned shall erect or cause to be erected traffic-control devices to warn and guide the public. Every person using such street shall obey all signs, signals, markings flagmen or other traffic-control devices which are placed to regulate, control and guide traffic through the construction or maintenance area. (Prior Code, Chapter 20)

SECTION 15-1809 RIDING ANIMALS AND ANIMAL- DRAWN VEHICLES.

Every person propelling any pushcart or riding an animal upon a roadway, and every person driving any animal-drawn vehicle shall be subject to the provisions of this chapter applicable to the

driver of any vehicle, except those provisions of this chapter which by their very nature can have no application. (Prior Code, Chapter 20)

State Law Reference: Similar provisions, 47 O.S. Sec. 11-104.

SECTION 15-1810 NOTIFICATION OF RUNS BY EMERGENCY VEHICLES.

It is unlawful for any person to drive on the streets of the city any emergency vehicle, including but not limited to police patrol cars, fire trucks, ambulances, sheriff's cars, highway patrol cars and police motorcycles, while sounding a siren, horn, bell or other noisemaking device designed to forewarn the populace of the approach of such vehicle, without first advising the police department by contacting the police dispatcher on duty of the intention to make the emergency run and giving the name of the person making the run, the destination, the route which is intended to be traveled and the nature of the emergency. (Prior Code, Chapter 20)

CHAPTER 19
IMPOUNDMENT PROCEDURES

Section 15-1901. Purpose and effect.
Section 15-1902. Authority to impound vehicles.
Section 15-1903. Derelict/Disabled vehicles.
Section 15-1904. Vehicles on bridges.
Section 15-1905. Vehicles constituting traffic hazards.
Section 15-1906. Illegal trespass.
Section 15-1907. Vehicles parked in a prohibited zone.
Section 15-1908. Vehicles blocking exits or fire hydrants.
Section 15-1909. Vehicles parked in intersections.
Section 15-1910. Stolen vehicles; recovery by police.
Section 15-1911. Arrest and detention of driver.
Section 15-1912. Place of impoundment.
Section 15-1913. Impoundment.
Section 15-1914. Seized and impounded vehicle storage.
Section 15-1915. Duration; release; impound fee.
Section 15-1916. Redemption of impounded vehicle.
Section 15-1917. Penalty.

SECTION 15-1901. PURPOSE AND EFFECT.

The impoundment of vehicles under authority of the provisions of this chapter shall be construed as an enforcement procedure for protection of the public peace, safety and welfare, and the safeguarding of property, and shall be used generally for the prevention and removal of traffic hazards, prevention and abatement of public nuisance arising from traffic law violations, protection of the public rights in the use of city streets and thoroughfares from obstructions placed and left in derogation of those rights, and for safeguarding and protecting stolen vehicles.

SECTION 15-1902. AUTHORITY TO IMPOUND VEHICLES.

Members of the Police Department are hereby authorized to impound vehicles under the circumstances hereinafter enumerated. No impoundment shall be valid unless made under order of an authorized police officer and in adherence with the procedures required in this chapter.

SECTION 15-1903. DERELICT/DISABLED VEHICLES.

A disabled vehicle or derelict vehicle, as defined herein, upon a street, highway or public property may be impounded under the following circumstances:

(A) If left unattended and improperly parked on street or highway;

(B) If left unattended longer than 48 hours on any street, on the shoulder of any street or highway, right-of-way or city-owned property; or

(C) If the person in charge of the vehicle is physically incapacitated to the extent as to be unable to provide for its custody or removal.

SECTION 15-1904. VEHICLES ON BRIDGES.

An unattended vehicle left upon any bridge, viaduct or causeway or within the structure of a grade separation may be impounded.

SECTION 15-1905. VEHICLES CONSTITUTING TRAFFIC HAZARDS.

A vehicle left unattended upon any street, alley or thoroughfare, and so parked illegally as to constitute a definite hazard or obstruction to the normal movement of traffic, shall be impounded.

SECTION 15-1906. ILLEGAL TRESPASS.

(A) An unattended vehicle found to be in violation hereof may be impounded when the required complaint has been properly made and filed as provided in this section.

(B) (1) If a violation of the provisions hereof occurs, the owner or legal occupant who complains shall sign a complaint against the person parking the vehicle on the owner's or legal occupant's property, or if the identity of the person parking the vehicle is unknown, then the complaint may be filed against the registered owner of the vehicle.

(2) The complaint shall be verified and shall allege that the complaining party is the owner or legal occupant of the property upon which the vehicle is parked or standing.

(C) Upon filing of the complaint by the property owner or legal occupant, and if there appears to be proper cause to believe the provisions hereof have been violated, the Police Department shall cause the vehicle to be impounded from the property and placed in storage.

SECTION 15-1907. VEHICLES PARKED IN A PROHIBITED ZONE.

Any unattended vehicle parked at the street curbing of any zone where parking is prohibited and where official signs are in place giving notice thereof in violation of the prohibition may be impounded.

SECTION 15-1908. VEHICLES BLOCKING FIRE EXITS OR HYDRANTS.

Any vehicle illegally parked in a manner that it blocks a fire escape ladder, device or exit or blocks ready access to a fire hydrant shall be impounded.

SECTION 15-1909. VEHICLES PARKED IN INTERSECTIONS.

Any unattended vehicle illegally parked in any street intersection shall be impounded. A disabled vehicle in an intersection, with the person in charge of the vehicle being present, shall be moved out of the intersection and to the nearest available legal parking space at the street curbing.

SECTION 15-1910. STOLEN VEHICLES; RECOVERY BY POLICE.

(A) Whenever a stolen vehicle is located by police and the registered owner cannot be found within a reasonable time not exceeding one hour, or cannot be determined from the registration or other identifying media in the vehicle or from records or information available from reports of stolen cars, the vehicle may be removed to the nearest authorized place of impoundment and the registered owner of the vehicle shall be notified of the location of the place of impoundment as soon as possible by the Police Department.

(B) If the registered owner is identified, located and notified of the recovery of the stolen vehicle, the owner shall be given the right to make his or her own arrangement for the removal of the vehicle within the period of one hour from the time he or she is actually notified of its recovery, and if the owner is unable or unwilling to effect the removal within the time specified, the vehicle may be impounded.

SECTION 15-1911. ARREST AND DETENTION OF DRIVER.

Whenever the driver or person in charge of any vehicle is placed under arrest and taken into custody and detained by police under circumstances which leaves or will leave a vehicle unattended on any street or highway, the vehicle may be impounded.

SECTION 15-1912. PLACE OF IMPOUNDMENT.

Every vehicle that is impounded under the provisions of this chapter shall be removed to the nearest garage or place of safe keeping designated by the City and to no other place.

SECTION 15-1913. IMPOUNDMENT.

Members of the Police Department are hereby authorized to remove a vehicle from

any street, highway, private property or public property to a storage facility as provided for in this code under the following circumstances:

(A) When any vehicle is left unattended upon any public right-of-way and is so parked as to constitute a hazard or obstruction to the normal movement of traffic or parked where parking is prohibited;

(B) When a derelict vehicle has been parked upon public right-of-way, easement or city owned property for a period of 48 hours;

(C) When a vehicle has been parked on private property without the consent of the owner or occupant of the property in violation of this code;

(D) When any vehicle is left abandoned upon public right-of-way in excess of 48 hours from the date it was first reported or observed by officers;

(E) When officers recover a vehicle reported stolen and the owner cannot be located, is unable or unwilling to effect the removal of the vehicle within a reasonable amount of time not to exceed one hour, or the preservation and collection of evidence requires removal;

(F) Where the vehicle has any evidentiary value, has directly or indirectly been involved in the commission of a crime, has been used to transport any person who has committed any offense involving the use of a firearm, or was directly or indirectly associated with a drive-by shooting;

(G) When a police officer effects the arrest of the owner or operator of a vehicle out of the vehicle;

(H) When the vehicle bears a license plate which has expired for a period in excess of 90 days, bears a license plate which has been altered or tampered with, or bears a temporary tag issued more than 30 days prior to the impoundment, or bears no license plate which would be in conformance with the Oklahoma Vehicle License Act (47 O.S. § 1101 *et seq.*); or

(I) The officer has probable cause that the person operating the vehicle has not been granted driving privileges or that the driving privileges of the person are currently suspended, revoked, canceled, denied, or disqualified; or

(J) The officer has probable cause that the vehicle is not insured as required by the Compulsory Insurance Law of this state.

(K) Any police officer who has directed the impoundment of any vehicle, or an authorized person in the employing agency of the officer, shall within seventy-two (72) hours of the impoundment notify the Department of Public Safety of such impoundment.

The notice of impoundment shall contain the name and address of the owner, if known, the make, model, vehicle identification number, registration number, date stored, place stored and the estimated value of the vehicle as determined by the officer. This section shall not be construed to create any civil liability upon the state, any agency of the state or employee thereof for failure to provide such notice to the owner or lienholder.

SECTION 15-1914. SEIZED AND IMPOUNDED VEHICLE STORAGE.

(A) Vehicle seized or impounded by the city may, at the direction of the Police Department, be transported to such place as the city may designate.

(B) The owner of the vehicle shall be responsible to the city or the city's designee for the following costs prior to the city or the city's designee releasing the vehicle. (The City Manager, or his or her designee, may, to meet the best ends of justice or expedite on-going investigations, release the owner of part or all of the cost owed the city or the city's designee.)

(1) The actual cost to have said vehicle transported to the place of storage, including the actual towing expenses.

(2) A storage charge as allowed by law charged by the city's designee. For purposes of this section, the day of receipt shall constitute the first day and the day of release shall constitute the last day.

(3) All fees incurred by the city or the city's designee, including lien filing fees, to either return the vehicle to the owner or sell the vehicle pursuant to statutory authority. Prior to releasing the vehicle, the owner shall obtain authorization to release from the Piedmont Police Department, and pay to the city's designee, all costs listed above. If the vehicle is impounded pursuant to any lawful authority, then those provisions shall apply in addition to the requirements of this section. If the vehicle is impounded pursuant to the provisions of § 15-1913 (F), (G), (H), (I), or (J) then the owner of the vehicle, or anyone authorized by the owner of the vehicle, shall show proof of valid security verification, valid operator's license and valid vehicle tag registration before the Police Department will authorize release of the vehicle. If the owner fails to claim the vehicle within the time prescribed by law, then the City Manager, or the city's designee, may institute proceedings to have the vehicle sold under the applicable statutes of the State of Oklahoma.

SECTION 15-1915. DURATION; RELEASE; IMPOUND FEE.

(A) Any vehicle impounded under the authority granted herein shall be stored and held until a written order for its release, signed by an authorized officer of the city, has been issued. For vehicles impounded under the authority of §15-1913 (F), (G), (H), (I), or (J) such order of release shall be conditioned upon the payment of an impound fee in the amount of $100 by the person to whom the release is issued. This impound fee shall

be independent of any fines, costs or fees which may be assessed from citations issued to any person for violation of traffic laws or other ordinance violations involving the impounded vehicle and in addition to any fees owned to the towing service for the impoundment and storage. The Chief of Police is hereby authorized to adopt rules and regulations consistent with this chapter to implement this section.

(B) There is hereby created within the general fund, police account, a special account into which all impound fees shall be deposited from which expenditures may be used for enforcement of traffic safety.

SECTION 15-1916. REDEMPTION OF IMPOUNDED VEHICLE.

Presentation of the order of release as provided in §15-1914 at the place of impoundment, together with payment or tender of payment of all impoundment costs and accrued storage charges due, shall entitle the person presenting such release to obtain possession of such vehicle.

SECTION 15-1917. PENALTY.

Except where a different punishment is prescribed, every person violating any of the provisions of this traffic code shall be guilty of an offense and, upon conviction thereof, shall be fined or punished as provided in §1-108.

CHAPTER 20

PENALTIES AND ARREST PROCEDURE

Section 15-2001 Penalty.
Section 15-2001.1 Increased fines under certain circumstances.
Section15-2002 Citation tags on parked vehicles.

SECTION 15-2001 PENALTY.

A. No person shall do any act forbidden or fail to perform any act required in this Chapter.

B. No parent of a child or the guardian of a ward shall authorize any child or ward to violate any provisions of this Chapter.

C. No person shall authorize or knowingly permit any vehicle registered in his name to be driven, or to stand, or to be parked in violation of any provisions of this Chapter.

D. Any person who violates any provision of this Chapter, or performs any unlawful act as defined in this Chapter, or fails to perform any act required in this Chapter is guilty of an offense and upon conviction thereof shall be punished s provided in Section 1-108 of this Code.

SECTION 15-2001.1 INCREASED FINES UNDER CERTAIN CIRCUMSTANCES.

The conviction of any person of a violation of this title when the offense occurred during a period when the driving privileges of the person were under suspension, revocation, cancellation, denial, or disqualification, or the person had not been granted driving privileges by Oklahoma or any other state, shall result in the doubling of the appropriate fine and doubling of all court costs and all fees collected by the Court on behalf of any other entity unless waived by the Court.

SECTION 15-2202 CITATION TAGS ON PARKED VEHICLES.

In cases where vehicles without drivers are parked or stopped in violation of this Chapter, Police Officers and other person appointed by the Chief of Police shall affix citation tags to the vehicles. A violator of any provision of this Chapter who has been given a citation tag that fails to appear in accordance with the instructions of such tag shall be subject to a separate offense as provided in Section 1-108.

(This page intentionally left blank)

PART 16

TRANSPORTATION

(RESERVED)

PART 17

UTILITIES

CHAPTER 1

GENERAL PROVISIONS

ARTICLE A

LEASE OF SYSTEMS

Section 17-101	Lease of utilities to authority.
Section 17-102	Authority rules adopted by reference, penalty.

ARTICLE B

WATER SHORTAGES

Section 17-121	Authority of Mayor in emergencies.
Section 17-122	Emergency conditions.
Section 17-123	Proclamation
Section 17-124	Appeals.
Section 27-125	Penalty.

ARTICLE C

WATER AND SANITARY SEWER EXTENSION AND PAYBACK POLICY

Section 17-131	Water main extension and payback policy
Section 17-132	Sanitary sewer extension and payback policy

CHAPTER 2

REFUSE COLLECTION SERVICES

Section 17-201	Definitions.
Section 17-202	Accumulation of garbage and refuge.
Section 17-203	Collection of garbage, refuse and rubbish.
Section 17-204	Disposal.
Section 17-205	Fees.

Section 17-206 Duty to request refuse service.
Section 17-207 Landfill, solid waste agreement.
Section 17-208 Penalty.

CHAPTER 3

STORM SEWER USE FEE

Section 17-301 Legislative findings.
Section 17-302 Monthly utility service charge.

CHAPTER 1

GENERAL PROVISIONS

ARTICLE A

LEASE OF SYSTEMS

Section 17-101 Lease of utilities to authority.
Section 17-102 Authority rules adopted by reference, penalty.

ARTICLE B

WATER SHORTAGES

Section 17-121 Authority of Mayor in emergencies.
Section 17-122 Emergency conditions.
Section 17-123 Proclamation
Section 17-124 Appeals.
Section 27-125 Penalty.

ARTICLE C

WATER AND SANITARY SEWER EXTENSION AND PAYBACK POLICY

Section 17-131 Water main extension and payback policy.
Section 17-132 Sanitary sewer extension and payback policy.

ARTICLE A

LEASE OF SYSTEMS

SECTION 17-101 LEASE OF UTILITIES TO AUTHORITY.

The City hereby consents and agrees to the lease of the City's water, sanitary sewerage, and refuse systems and facilities, and all future additions thereto to the Piedmont Municipal Authority as authorized by statute, to be effective at the time and upon the terms and conditions specified in a certain "Lease" prepared under the direction of the City Council and filed in the office of the City Clerk on this date. The Mayor of the Cit hereby is authorized and directed, on behalf of the City, to execute and deliver the lease of the Piedmont Municipal Authority. (Prior Code, Chapter 18) Cross Reference: See also Appendix for the text of the Piedmont Municipal Authority Trust Indenture. See also City of Piedmont Municipal Authority Rules and Regulations.

SECTION 17-102 AUTHORITY RULES ADOPTED BY REFERENCE, PENALTY.

Rules and regulations adopted by the Piedmont Municipal Authority are hereby adopted and incorporated herein by reference, applicable as if set out in full herein. Any violation of the rules and regulations of the Authority shall be punishable as provided in Section 1-108 of this Code.

Ed. Note: See the minutes and resolutions of the Authority Board of Trustees and the City of Piedmont Municipal Authority Rules and Regulations for regulations governing utilities, rates, and payment procedures for municipal utilities by the Authority.

ARTICLE B

WATER SHORTAGES

SECTION 17-121 AUTHORITY OF GENERAL MANAGER IN EMERGENCIES.

Whenever an emergency exists by reason of a shortage of water due to inadequate supply, limited treatment or distribution capacity or failure of equipment or material, the General Manager of the Authority is hereby authorized to restrict or prohibit the use of water from the City's water system.

SECTION 17-122 EMERGENCY CONDITIONS.

An emergency exists whenever the General Manager reasonably determines the City's water system is unable to supply the full commercial and domestic needs of the users thereof, including adequate fire protection.

SECTION 17-123 PROCLAMATION.

Upon the determination that such an emergency exists, the General Manager shall issue a proclamation declaring the emergency and setting out with particularity an order restricting use of water from the City system. Such order may:

1. Restrict water usage during certain periods of the day or week or according to Any orderly and nondiscriminatory scheme; and,

2. Prohibit usages not essential to public health and safety.

The order may be revised from time to time as the General Manager deems necessary.

SECTION 17-124 APPEALS.

Any person feeling aggrieved by a proclamation of the General Manager shall have the right to present the matter to the next regular or special meeting of the Municipal Authority Board of Trustees or to any emergency session called to discuss the water emergency. The Municipal

Authority Board of Trustees may exempt such aggrieved person, wholely or in part, from compliance with the proclamation order upon a showing that compliance creates an immediate threat to the person's health or safety. The ruling of the Municipal Authority Board of Trustees by a majority vote of all its members shall be final and binding as to the continuance of any terms of the proclamation. Until and unless the action of the General Manager is modified or revoked by action of the Municipal Authority Board of Trustees, all water users shall be bound by the proclamation.

SECTION 17-125 PENALTY.

Any person who in any manner directly or indirectly violates or permits others under his supervision, custody, or control to violate any term of a duly published proclamation shall be guilty of a misdemeanor. Each separate day of water use in violation of such proclamation shall constitute a separate offense. Violations of this Chapter shall be punishable as provided in Section 1-108 of this Code.

SECTON 17-126 APPEALS.

Any person feeling aggrieved by a proclamation of the Mayor shall have the right to present the matter to the next regular or special meeting of the City Council or to any emergency session called to discuss the water emergency. The City Council may exempt such aggrieved person, wholely or in part, from compliance with the proclamation order upon a showing that compliance creates an immediate threat to the person's health or safety. The ruling of the City Council by a majority vote of all its members shall be final and binding as to the continuance of any terms of the proclamation. Until and unless the action of the Mayor is modified or revoked by action of the City Council, all water users shall be bound by the proclamation.

SECTION 17-127 PENALTY.

Any person who in any manner directly or indirectly violates or permits others under his supervision, custody, or control to violate any term of a duly published proclamation shall be guilty of a misdemeanor. Each separate day of water use in violation of such proclamation shall constitute a separate offense. Violations of this Chapter shall be punishable as provided in Section 1-108 of this Code.

ARTICLE C

WATER AND SANITARY SEWER EXTENSION AND PAYBACK POLICY

SECTION 17-131 WATER MAIN EXTENSION AND PAYBACK POLICY.

A. PURPOSE AND SCOPE. It is the intent of this document to provide a uniform and comprehensive water main extension policy for the City in regard to approach and boundary mains; to provide for the equitable distribution of the costs of water main improvements between the City, the Piedmont Municipal Authority, and Developers as herein defined; to revise the method of financing the costs of approach mains and boundary mains; to provide for the collection of connection fees for the purpose of recovering investments made by the City, the

Piedmont Municipal Authority, and the Developers for water main improvements; to provide adequate funds for the repair and maintenance of the existing and hereafter acquired water distribution system of the City; to establish a method for coordination of water main extension policy with availability of other public services provided by the City; and to protect the general health, safety, and welfare of the citizens of this City.

B. DEFINITIONS. As used herein the following words and terms shall have the meanings set forth below:

1. Developer - shall mean any person requiring the extension of water service to provide water to a proposed or existing development or subdivision, whether platted or unplatted.

2. Approach Main - shall mean the off-site grid main that is required to connect a development or subdivision to a source or sources of ample water supply in accordance with the Piedmont Master Water Plan or approved design criteria.

3. Internal Main - shall mean a water main that is situated within an area surrounded by grid mains; the sole purpose of the internal main is to provide water service, circulation, and fire protection to customers, residents, or users located within the boundaries of the development or subdivision.

4. Boundary Main - shall mean a water main other than an internal main that is required to be installed in a public street or easement which borders the development or subdivision; and further, such main must be faced on one side by the Developer's property and on the other side by property not included in the development or subdivision which could also be served by such boundary main.

5. Grid Main - A water main extended in accordance with the Piedmont Water Master Plan or other approved criteria as approved by the City of Piedmont.

6. Connection Fee - A charge for the privilege of connecting to a grid main, subject to reimbursement under this ordinance.

C. EXTENSION OF WATER MAINS.

1. Written Application or Water Main Extension. Prior to beginning any work in regard to the extension of water mains, the property owner, developer, or others desiring the approach main shall apply in writing for such extension with the Piedmont Municipal Authority.

2. Ownership of New Main Extensions. The City of Piedmont owns the Piedmont water system. All new main extensions and appurtenances that are to be connected to and served by the City's existing water system shall become the property of the City upon completion and acceptance by the City. The applicant shall convey such main extensions and appurtenances to the City by Quit Claim Deed, Warranty Deed, Assignment, or dedication along with any/or all respective easements and/or rights-of-way obtained prior to connection with the City's existing water mains and furnish a one (1) year maintenance bond thereon. The type of conveyance shall be at the option of the City. The applicant for the main extension shall have no interest therein

other than the right to service therefrom and contract rights reimbursement under the terms and conditions outlined herein.

3. Acceptance of New Main Extensions. Before any newly constructed main is connected to the City's existing water system and final approval and acceptance of the new main extension is made by the City, the applicant shall furnish evidence satisfactory to the City, that the cost of all materials, labor, and equipment used to construct the new main extension has been paid. After satisfactory evidence that payment of construction expenses has been made and the receipt of the conveyance (s) described in part (2), the City will accept the new main extension into its system from the point of connection to the existing system to and including the water meter(s).

4. All Customers Shall Conform to City Regulations. All customers obtaining water service from the Piedmont water system shall conform to all rules, regulations, ordinances, rates, conditions of service, and practices now prevailing or which may be established by the City in the future.

5. Areas to be Platted. Approach mains shall not be extended into areas within the City limits of Piedmont until after the areas to which main extensions are desired have been platted in accordance with the requirements of the City and the platting approved by the proper City authorities.

6. No Water Mains until Sewerage Facilities Assured. Water mains shall not be extended to any user until provisions have been made for the financing of necessary sanitary sewerage facilities to serve the user, and the construction of these sewerage facilities is assured, with the following exceptions:

a. Where water is to be used for agricultural or other purposes that do not result in the production of objectionable wastes.

b. Where the construction of sanitary sewers cannot be consummated due to reasons beyond the control of the proposed user, and where said user can provide independent methods of sewage disposal in a manner approved by the public health authorities and by the City.

7. Water Facilities Constructed to City of Piedmont and Piedmont Municipal Authority Standards. All water mains, valves, fire hydrants, service connections to the property line, meters, and appurtenances shall be constructed in accordance with the City and Piedmont Municipal Authority specifications.

8. Cost of Mains. All grid mains and internal mains and/or respective easements and/or rights-of-way will be constructed/obtained at the expense of the person or persons desiring service which may be either the property owner, developer, or others desiring the distribution main installations; provided, that with the approval of the City and the Piedmont Municipal Authority, the City may extend any grid main which is determined to be feasible and in accord with the updated Water Master Plan.

9. Over-Size Mains. Oversized mains shall be defined as those approach mains with a diameter in excess of ten inches (10").

The City Council of the City of Piedmont shall establish the costs of water mains ten inches (10") in diameter, and the corresponding differences in cost for construction of larger oversized diameter mains. In order to establish a true cost of an approach or boundary main, such main shall be contracted for separately from internal mains.

If the City requires an approach main or boundary main of a diameter greater than ten inches (10"), the City may pay the cost in excess of the cost for ten-inch (10") main based upon the actual bid prices compared to costs for ten inches (10") in diameter as calculated by the City of Piedmont.

If the Developer desires to construct an approach main or boundary main of a diameter greater than ten inches (10"), the Developer will pay the entire cost of construction of the oversized main.

10. Grid Mains, Recovery of Costs. When an approach or boundary main is installed by a Developer to serve a subdivision, and such main is located along a section line right-of-way, and said main abuts intervening property, the Developer shall be entitled to recover a part of the costs of said approach or boundary main from the owners of the property connecting to such main prior to such properties obtaining service from the main in accordance with the connection fee policy outlined below. Where such mains are constructed by the City of Piedmont Municipal Authority, the City of Piedmont Municipal Authority, respectively, shall be entitled to a similar reimbursement at a rate established in accordance with the connection fee schedule set out below.

11. Water Tap Fee. All taps that are required to be made to the City's existing water system to serve new mains that have been constructed by the Applicant shall be made by the Applicant or Applicant's contractor. The water tap fee shall be in addition to the connection fee. In either case such taps shall be made at the expense of the Applicant. All connections to the taps shall be made by the contractor at his expense under the supervision of the Piedmont Water Authority. The sterilization shall be performed by Applicant or Applicant's contractor when authorized by the Piedmont Municipal Authority standards approved by the City. The Applicant's responsibilities include prevention of contamination, preliminary flushing, and provisions for adequate drainage. The Applicant's cost shall not include payment for water, chemicals, or other materials used in the sterilization process.

12. Connection Fees.

a. Policy for application of connection fees. The policy of the City and Piedmont Municipal Authority is that the property owners connecting to the main shall

participate in the cost of water main extensions, which serve their property prior to obtaining any water service from such mains.

b. Basis for connection fee. The amount of connection fee shall be determined at the time of installation of the water main based on the actual cost of construction, excluding the difference in cost attributable to the construction of an oversized main.

c. Records. The City shall maintain records of all mains where connection fees are applicable and shall collect such fees prior to allowing taps on such mains.

d. Time period limitation. The Developer who has borne the cost of installing water mains shall be entitled to reimbursement of the connection fees actually collected by the City for a period of fifteen (15) years from the date that such main extensions are accepted by the City; provided, that neither the Developer nor the City may recover more than the original cost of construction, regardless of whether the recovery occurs before the full fifteen (15) year period expires. Where approved mains are constructed by the City or Piedmont Municipal Authority funds, the City or the Piedmont Municipal Authority, respectively, will be entitled to the reimbursement of the connection fees, until the expenditure of the City and Piedmont Municipal Authority have been recovered. Reimbursement for the Developer's Cost of Construction of a Project shall only be pursuant to the receipt of the Connection Fees as set forth herein.

e. Computation of connection fees.

(1) The connection fee for property abutting the main shall be based on one-half of the construction cost, excluding the difference in cost attributable to the construction of an oversized main, based on the number of feet property abutting on the main. If the property owner on the butt (terminus or end) of an approach main wishes to connect to the end of main, the connection fee shall be the full cost of the approach main, excluding the difference in cost attributable to the construction of an oversized-main, but including engineering and right-of-way costs based on the number of feet which would be needed to extend the main across the entire front footage of the connecting property. The City and Piedmont Municipal Authority have the option of limiting extensions from the butt of an approach main to one hundred (100) feet.

(2) If the main is on the boundary of the installing Developer's property, the abutting property owner shall not be permitted to receive water service from said main until a connection fee, based on one-half of the actual cost of the boundary main excluding the difference in cost attributable to the construction of an oversized main, based on the number of feet of property abutting the main has been paid.

(3) Where the approach or boundary main is installed after the effective date of this policy and non-abutting property desires service from such main through internal mains, a connection fee shall be collected, based on one-half of the construction cost excluding the difference in cost attributable to the

construction of an oversized main, based on the rate applicable for one hundred (100) feet of abutting property.

(4) No connection fee shall be charged for Piedmont-owned fire hydrants or connections to properties or facilities owned by the City of Piedmont.

(5) Ten percent (10%) of all connection fees collected by the City of Piedmont shall be retained by the City of Piedmont to defray administration costs.

(6) The amount to be repaid to the installing developer from connection fees shall not exceed the total construction cost of the approach or boundary main. Any administrative fees retained by the City of Piedmont shall be excluded from the computation of the payment to the developer.

f. The City Manager is hereby authorized to adopt rules, regulations and forms consistent with this policy for administration of this policy.

SECTION 17-132 SANITARY SEWER EXTENSION AND PAYBACK POLICY.

A. PURPOSE AND SCOPE. This policy is intended to serve as a guideline for the equitable distribution of costs among property owners and the City of Piedmont for the installation of wastewater collection facilities. Meeting the requirements of Policy for the construction of wastewater facilities does not infer that the City of Piedmont approves of a particular development proposal or will consider a particular area suitable for urban development. The general policies regarding suitability of incorporated areas for development are found in the Piedmont Comprehensive Plan. The minimum requirements for the subdivision of property are found in the Piedmont Subdivision Regulations, and the use of land and associated development requirements are governed by the Piedmont Zoning Ordinance.

B. DEFINITIONS.

1. Lateral - shall mean a minimum 8-inch diameter collector line for serving abutting properties.

2. Trunk - shall mean a line of at least 8-inch diameter, which collects lateral mains and connects to an interceptor.

3. Interceptor - shall mean the sanitary sewer mains for a particular drainage basin which serves the entire basin and follows the primary drainage pattern and shall not exceed the linear footage recommended by the City Engineer of the City of Piedmont, or the Piedmont Municipal Authority.

C. AUTHORITY. The Developer shall submit an Application to the City Manager proposing a sanitary sewer extension project. Upon receipt of an Application the City

Manager of Piedmont may recommend to the City Council the investment in interceptors and trunk lines to be connected to the Piedmont sanitary sewer system.

D. SUBDIVISIONS WITHIN THE CITY LIMITS. The Developer shall provide the City with a preliminary plan by a licensed professional engineer indicating proposed alignment, grade, and size for trunks and interceptor for the subdivision and the drainage basin area to be served thereby. The Developer shall be responsible for construction of the Project through its subdivision from the point of connection to the existing Piedmont sanitary sewer system in accordance with Piedmont standards; and with an alignment, in a size, and in such location as determined by the City Engineer. The Developer shall provide final plans and specifications to the Piedmont Municipal Authority for said Project. After approval of the Application the Developer may construct the interceptor and trunk line from the Piedmont sanitary sewer system through the subdivision as determined by the City Engineer. Only platted subdivisions will be eligible to participate in this sewer reimbursement policy.

E. SUBDIVISIONS OUTSIDE THE CITY LIMITS. Extensions and connections to the Piedmont sanitary sewer system for service to subdivisions outside the City limits will be reviewed by the City Engineer of the City of Piedmont on a case by case basis, and may be forwarded with a recommendation to the City Council for direction and/or approval.

F. DETERMINATION OF THE DEVELOPER'S COST OF CONSTRUCTION. After the Application is approved by the City Engineer, Developer, or his Engineer, will provide original specifications and mylars or electronic copies of the drawings of the Project. Project, as defined by this Policy, shall mean all necessary sanitary sewer extensions of the Piedmont sanitary sewer system necessary to serve the Developer's subdivision and to meet any increased sizing required by the Engineer to properly serve the basin. Subsequently, Developer shall competitively solicit and price the construction of the Project.

1. The project shall be competitively priced, and the Developer shall document same to the satisfaction of the City Engineer.

2. The Project shall be constructed by the Developer to Piedmont standards.

3. Should the Developer notify the City Manager in writing that the Developer desires to withdraw his Application and not proceed with the Project, then the Developer shall be liable for all costs and expenses made or contracted to be paid up to the time of actual receipt of notice. Should the Developer not commence the Project within a reasonable time then, upon notice to the Developer, the City of Piedmont may withdraw its proposed investment.

G. REIMBURSEMENT OF COSTS. Developer may recover their share of the Cost of Construction of the Project paid by the Developer on that portion of the Project outside the subdivision; and the City of Piedmont may recover its investment contribution to the Project within and without the subdivision, through connection fees from persons and entities desiring sanitary sewer service connections to the Project. No force main shall be subject to reimbursement under this ordinance. Reimbursement for the Developer's Cost of Construction of a Project shall only be pursuant to the receipt of the Connection Fees as set forth herein.

1. Developer shall receive reimbursement through Connection Fees actually paid to Piedmont for connections made to the Project within a period of fifteen (15) years from the date the Project was accepted by the City of Piedmont, except as otherwise provided herein.

2. Developer may not recover more than the Developer's Cost of Construction. Developer's Cost of Construction, as used in this Policy, shall mean the cost actually paid by Developer for interceptors and trunk lines outside the Developer's subdivision, less any investment by Piedmont. Developer may not recover any Cost of Construction within the subdivision. However, Developer may include in the Cost of Construction five percent (5%) of the cost of the interceptors and trunk lines outside the subdivision as engineering design fees and the actual costs of any easements acquired by the developer.

3. All persons or entities who shall desire a sanitary sewer service connection shall pay a Connection Fee as set forth in this Policy, except the Developer and the City of Piedmont, provided this section shall not be in lieu of the "Tap Fee" established by the Piedmont Municipal Authority for each connection. However, this provision shall not exempt the Developer from Connection Fees for connection of another subdivision or facility to this Project nor shall any connection be exempt from the "tap fee" established by the Piedmont Municipal Authority. The requirement to pay Connection fees shall not be affected by whether the property to be served is zoned residential, commercial, industrial, or any other designation.

4. Connection Fees, as required herein, shall be paid to the City of Piedmont prior to making any connection to or obtaining any sanitary sewer service from the Project.

5. No one, other than the City of Piedmont, Piedmont Municipal Authority, or a Property Owner in the drainage basin may make a connection for sanitary sewer service from the Project; provided, however, the City Manager may, at his sole discretion, permit a connection by a Property Owner outside the drainage basin upon payment of a Connection Fee as determined by the City Manager. The City of Piedmont may connect to any Project without paying a Connection Fee, regardless of whether the City of Piedmont is in the drainage basin.

H. CONNECTION FEE. A fee shall be charged to any Developer, contractor, or other person or entity for connection to the Project constructed by the Developer or invested in or constructed by the City of Piedmont under this Policy. No force main shall be subject to reimbursement under this ordinance; however, any force main to a sewer line extension subject to connection fees shall pay the connection fee for each tap. The fee amount shall be determined based on the area (in acres) served by the developer's extension. The amount shall be established by the City Manager on a case-by-case basis to recover the costs and expenses incurred by the Developer and the investment by the City of Piedmont. The fees received shall be prorated between the Developer and the City of Piedmont based upon Developer's Cost of Construction and Piedmont's funds invested. This Connection Fee shall be in addition to and not in lieu of any other fee or charge established by ordinance, resolution, or policy. All laterals, trunks, and interceptors to be connected to the Piedmont Sanitary sewer system, either directly or indirectly, will be:

A. Constructed in accordance with the standards and requirements of the City of Piedmont.

B. Constructed at locations and alignments approved by the City Engineer and the City Manager.

C. Constructed in easements dedicated to the City of Piedmont.

D. Constructed in a size, alignment, and location required by the City Engineer of the City of Piedmont.

E. Inspected by the City Engineer and the City Manager of the City of Piedmont prior to acceptance.

Interceptors, trunks, and laterals to be maintained by the City of Piedmont must be dedicated or donated to the City of Piedmont and must be approved and accepted by the City prior to use.

Developers, contractors, or others dedicating laterals, trunks, and interceptors to become part of the Piedmont sanitary sewer system shall provide or cause to be provided a maintenance bond to the benefit of the City of Piedmont in an amount, for a period, and in a form acceptable to the City Engineer and the City Manager of the City of Piedmont as a precondition to acceptance of said facilities.

I. COMPUTATION OF CONNECTION FEE. The sewer connection fee will be determined by the City Engineer based upon the number of acres of land in the drainage basin capable of being served (without lift or pump stations) by the sewer main extension (service area), and the connection fee shall be the total construction costs divided by the number of acres in the service area. Each connection shall pay its pro-rata acreage connection fee. Where a single-family residential sewer connection is sought to serve one unplatted tract greater than five (5) acres in size, then the connection fee will be computed based on a lot size of five (5) acres.

J. ADMINISTRATIVE FEE. Ten percent (10%) of all connection fees collected by the City of Piedmont shall be retained by the City of Piedmont to defray administration costs. The amount to be repaid to the installing developer from connection fees shall not exceed the total construction cost of the sewer extension. Any administrative fees retained by the City of Piedmont shall be excluded from the computation of the payment due to the developer.

K. RULES, FORMS, AND REGULATIONS. The City Manager is hereby authorized to adopt rules, regulations and forms consistent with this policy for administration of this policy.

CHAPTER 2

REFUSE COLLECTION SERVICES

Section 17-201	Definitions.
Section 17-202	Accumulations of garbage and refuse.
Section 17-203	Collection of garbage, refuse and rubbish.
Section 17-204	Disposal.
Section 17-205	Fees.
Section 17-206	Duty to request refuse service.
Section 17-207	Landfill, solid waste agreement.
Section 17-208	Penalty.

SECTION 17-201 DEFINITIONS.

For the purpose of this chapter, the following terms shall have the meanings respectively ascribed to them herein unless the context clearly requires otherwise:

1. "Garbage" means all putrescible waste, except sewage and body wastes, including all meat, vegetable and fruit refuse and carcasses of small animals and fowl from any premises within the city;

2. "Premises" means land, buildings or other structures, vehicles, watercraft or parts thereof, upon or in which refuse is stored;

3. "Refuse" means all solid wastes, including garbage and rubbish;

4. "Rubbish" means tin cans, bottles, papers, tree limbs, leaves, and similar materials from any premises within the city; and

5. "Rubble" means brushwood, cardboard boxes and other bulky earthen, wooden or metal refuse-like materials, longer, larger or heavier than refuse.

(Prior Code, Sec. 9-1)

SECTION 17-202 ACCUMULATIONS OF GARBAGE AND REFUSE.

It is the duty of every person owning, managing, operating, leasing, occupying or renting any premises or any place where refuse accumulates, to provide, and at all times maintain in good order and repair, on the premises, a portable container or containers for refuse. The container shall be rodent-proof and fly-proof and be of sufficient capacity and in sufficient numbers to accommodate and securely keep all of the refuse that may accumulate between collections except where approved type bulk containers are in use. All such containers shall be kept clean and free from accumulation of any substance remaining attached to the inside of the container which would attract flies, mosquitoes or any other insects. All refuse shall be transported to, and emptied into, the bulk containers where they are provided. (Prior Code, Sec. 9-2)

SECTION 17-203 COLLECTION OF GARBAGE, REFUSE AND RUBBISH.

A. Every person owning, managing, operating, leasing, occupying or renting any premises shall provide a metal or other satisfactory weather-proof container for the disposal of garbage, refuse and rubbish in the city. The container shall be limited to sixty (60) pounds loaded weight. The containers shall be equipped and maintained with tight-fitting lids and side handles. The containers shall be placed at curbside for collection on the regular collection days in a location mutually convenient to the resident and the refuse collector.

B. Commercial and institutional establishments shall use containers as are necessary to keep the premises in a sanitary condition and such as may be approved by the city council.

C. Tree limbs shall be cut into lengths not exceeding three and one-half (3 1/2) feet prior to pick up by the city. Tree limbs may be placed at curbside when tied in bundles not to exceed three and one-half (3 1/2) feet in length. No limbs shall be greater in diameter than three (3) inches. The bundle shall not exceed the maximum size to be placed in a packer truck by one person. The city council may, from time to time, adopt regulations governing the pickup of other items of debris not provided for herein.

D. The city or its agents shall collect garbage, trash, debris, rubbish and refuse as provided herein over routes approved by the city when such refuse is placed in proper containers as prescribed by the city. (Prior Code, Sec. 9-3)

SECTION 17-204 DISPOSAL.

The disposal of garbage and rubbish shall be by landfill and daily cover. (Prior Code, Sec. 9-4)

SECTION 17-205 FEES.

Fees shall be established by motion or resolution for the refuse service provided by the city. The fees shall be included with the water bills. (Prior Code, Sec. 9-5, 9-6, in part).

Cross Reference: See fee schedule for applicable fees.

SECTION 17-206 DUTY TO REQUEST REFUSE SERVICE.

It is the duty of every person occupying or having control of the occupancy of any premises in the city to notify the city at the beginning of such occupancy and request, accept and use the refuse collection service of the city. Failure of any owner, rental agent or occupant of premises to make such request shall not prevent nor impair or impede the city from adding that person's name to the refuse collection records and providing such service and otherwise enforcing by appropriate action the regulatory measures herein prescribed. (Prior Code, Sec. 9-6)

SECTION 17-207 LANDFILL, SOLID WASTE AGREEMENT.

The mayor and clerk are authorized and directed to execute the agreement between the city and the county Solid Waste Disposal Authority when so directed by the city council. (Prior Code, Secs. 9-10 and 9-11, in part)

SECTION 17-208 PENALTY.

Any violation of this chapter shall be punishable as provided in Section 1-108 of this code. Each day such violation occurs shall be a separate offense. (Prior Code, Sec. 9-15)

PART 17A

SEWERS AND SEWAGE DISPOSAL

ARTICLE 1

GENERAL

Section 17A-1.	Definitions.
Section 17A-2.	Abbreviations.
Section 17A-3.	Purpose and policy.
Section 17A-4.	Administration.
Section 17A-5.	Connections with storm sewers or natural outlet.
Section 17A-6.	Costs of sewers in private developments.
Section 17A-7.	Tampering with sewage works prohibited.
Section 17A-8.	Department of Environmental Quality permit requirement,exemptions.
Sectopm 17A-9.	Proper maintenance of sewer system.
Section 17A-10.	Measurements, tests and analyses of wastes.
Section 17A-11.	Control manholes.
Section 17A-12.	Requiring backwater valves.
Section 17A-13 --	
Section 17A-30.	Reserved.

ARTICLE II

ADMINISTRATIVE ENFORCEMENT REMEDIES

Section 17A-31.	Notification of violation.
Section 17A-32.	Consent orders.
Section 17A-33.	Show cause hearing.
Section 17A-34.	Compliance orders.
Section 17A-35.	Cease and desist orders.
Section 17A-36.	Emergency suspensions.
Section 17A-37.	Termination of discharge.
Section 17A-38.	Pretreatment Enforcement Response Guide.
Section 17A-39 --	
Section 17A-60.	Reserved.

ARTICLE III

JUDICIAL ENFORCEMENT REMEDIES

Section 17A-61.	Injunctive relief.
Section 17A-62.	Civil penalties.
Section 17A-63.	Criminal prosecution.
Section 17A-64.	Remedies nonexclusive.
Section 17A-65. --	

Section 17A-90. Reserved.

ARTICLE IV.

SUPPLEMENTAL ENFORCEMENT ACTION

Section 17A-91. Performance bonds.
Section 17A-92. Liability insurance.
Section 17A-93. Water supply severance.
Section 17A-94. Public nuisances.
Section 17A-95. --
Section 17A-120. Reserved.

ARTICLE V.

AFFIRMATIVE DEFENSES TO DISCHARGE VIOLATIONS

Section 17A-121. Upset.
Section 17A-122. General/specific prohibitions.
Section 17A-123. Bypass.
Section 17A-124. --
Section 17A-150. Reserved.

ARTICLE VI.

CONNECTIONS TO PUBLIC SEWERS

Division 1. Generally

Section 17A-151. Required.
Section 17A-152. Connections to laterals only.
Section 17A-153. Notice to make connection.
Section 17A-154. --
Section 17A-180. Reserved.

Division 2. Permit and Inspection

Section 17A-181. Required.
Section 17A-182. Reimbursement of assessment paid by City.
Section 17A-183. Connections where no special assessment made.
Section 17A-184.--
Section 17A-189. Reserved.

Division 3. State Permit Exemption

Section 17A-190. Municipal systems.
Section 17A-191. Small sewage treatment systems.
Section 17A-192. --
Section 17A-210. Reserved.

ARTICLE VII.

INDUSTRIAL OR HARMFUL DISCHARGES

Division 1. Generally

Section 17A-211. Prohibited discharge standards.
Section 17A-212. Federal categorical pretreatment standards.
Section 17A-213. State requirements.
Section 17A-214. Specific pollutant and impurities limitations and special conditions.
Section 17A-215. City's right of revision.
Section 17A-216. Special agreements.
Section 17A-217. Dilution.
Section 17A-218. Waivers and variances.
Section17A-219. --
Section 17A-240. Reserved.

Division 2. Pretreatment of Wastewater

Section 17A-241. Pretreatment facilities.
Section 17A-242. Additional pretreatment measures.
Section 17A-243. Accidental discharge/slug control plans.
Section 17A-244. Tenant responsibility.
Section 17A-245. Hauled wastewater.
Section 17A-246. Vandalism.
Section 17A-247A. --
Section 17A-270. Reserved.

Division 3. Wastewater Discharge Permit Eligibility

Section 17A-271. Wastewater survey.
Section 17A-272. Wastewater discharge permit requirement.
Section 17A-273. Wastewater discharge permit for existing connections.
Section 17A-274. Wastewater discharge permit for new connections.
Section 17A-275. Wastewater discharge permit for extrajurisdictional industrial users.
Section 17A-276. Wastewater discharge permit application contents.
Section 17A-277. Application signatories and certification.
Section 17A-278. Wastewater discharge permit decisions.

Section 17A-279. --
Section 17A-300. Reserved.

Division 4. Wastewater Discharge Permit Issuance Process

Section 17A-301. Wastewater discharge permit duration.
Section 17A-302. Wastewater discharge permit content.
Section 17A-303. Wastewater discharge permit appeals.
Section 17A-304. Wastewater discharge permit modification.
Section 17A-305. Wastewater discharge permit transfer.
Section 17A-306 Wastewater discharge permit revocation.
Section 17A-307. Wastewater discharge permit reissuance.
Section 17A-308. Wastewater discharge permit notification.
Section 17A-309. Potential to discharge permit required.
Section 17A-310. --
Section 17A-330. Reserved.

Division 5. Reporting Requirements

Section 17A-331. Baseline monitoring reports.
Section 17A-332. Compliance schedule progress report.
Section 17A-333. Report on compliance with categorical pretreatment standard deadline.
Section 17A-334. Periodic compliance reports.
Section 17A-335. Report of changed conditions.
Section 17A-336. Reports of potential problems.
Section 17A-337. Reports from significant non-categorical users and nonsignificant industrial users.
Section 17A-338. Notice of violation/repeat sampling and reporting.
Section 17A-339. Notification of discharge of hazardous waste.
Section 17A-340. Analytical requirements.
Section 17A-341. Sample collection.
Section 17A-342. Determination of noncompliance by use of grab sample.
Section 17A-343. Date of submittal.
Section 17A-344. Recordkeeping.
Section 17A-345. --
Section 17A-370. Reserved.

Division 6. Compliance Monitoring

Section 17A-371. Inspection and sampling.
Section 17A-372. Search warrants.
Section 17A-373. --
Section 17A-390. Reserved.

Division 7. Confidential Information

Section 17A-391. Confidential information or data.
Section 17A-392. --
Section 17A-410. Reserved.

Division 8. Publication of List of Industrial Users in Significant Noncompliance

Section 17A-411. Publication of list of industrial users in significant noncompliance.
Section 17A-412. --
Section 17A-430. Reserved.

Division 9. Surcharge Costs

Section 17A-431. Generally.
Section 17A-432. Surcharge for BOD and suspended solids.
Section 17A-433. --
Section 17A-450. Reserved.

Division 10. Miscellaneous Provisions

Section 17A-451. Charges and fees generally.
Section 17A-452. Schedule of fees.
Section 17A-453. Additional charges and fees.
Section 17A-454. --
Section 17A-480. Reserved.

ARTICLE VIII.

RATES, CHARGES, BILLING AND COLLECTION PROCEDURES

Division 1. Generally

Section 17A-481. Billing.
Section 17A-482. Due date and payment generally.
Section 17A-483. Use of water deposits for payment of sewer service charges.
Section 17A-484. Special provisions for resale of water.
Section 17A-485. Termination of water or sewer service.
Section 17A-486. --
Section 17A-500. Reserved.

Division 2. User Charges

Section 17A-501. Generally.
Section 17A-502. Winter period consumption base.
Section 17A-503. Special provisions for nonresidential users.

Section 17A-504. Special provisions for users having private water service.
Section 17A-505. Establishment of winter period consumption base for residential domestic users applicable for the period from April 1, 2006 to March 31, 2007.
Section 17A-506. --
Section 17A-520. Reserved.

Division 3. Industrial Waste Surcharge

Section 17A-521. Required.
Section 17A-522. Charge supplemental.
Section 17A-523. Formula for calculation.
Section 17A-524. Amount.
Section 17A-525. Meters and adjustments for unpolluted wastes.
Section 17A-526. Charges for initial year; reports and annual review.
Section 17A-527. Billing.
Section 17A-528. --
Section 17A-550. Reserved.

Division 4. Industrial Cost Recovery

Section 17A-551. Generally.
Section 17A-552. Formula for calculation.
Section 17A-553. Basis for determination.
Section 17A-554. Amount of fees.
Section 17A-555. Billing.
Section 17A-556. Lump sum payments.
Section 17A-557. Termination.
Section 17A-558. --
Section 17A-580. Reserved.

ARTICLE IX.

SEWERS OUTSIDE CITY

Section 17A-581. Compliance with chapter.
Section 17A-582. Approval of plans.
Section 17A-583. Engineering and inspection fees.
Section 17A-584. Inspection and approval by City.
Section 17A-585. Filing of original tracings of sewer plans.
Section 17A-586. Special provisions for municipalities.
Section 17A-587. Maintenance.
Section 17A-588. Sewer connection permit.
Section 17A-589. --
Section 17A-620. Reserved.

ARTICLE X.

SEPTIC TANKS

Division 1. Generally

Section 17A-621. Definitions and interpretation.
Section 17A-622. Compliance with State standards.
Section 17A-623. Percolation tests.
Section 17A-624. Inspections.
Section 17A-625. --
Section 17A-650. Reserved.

Division 2. Licensing and Certification of Contractors

Section 17A-651. Required.
Section 17A-652. Examination.
Section 17A-653. Issuance and fees.
Section 17A-654. Term and renewal.
Section 17A-655. Bond.
Section 17A-656. --
Section 17A-680. Reserved.

Division 3. Septic Tank Cleaners
Part A. General Provisions
Section 17A-681. Sanitation standards.
Section 17A-682. Disposal of septic tank materials.
Section 17A-683. Discharge of septic tankers.
Section 17A-683.1. Security deposit, septic.
Section 17A-684. Disposal of materials from privies.
Section 17A-685. Time of disposal.
Section 17A-686. Inspections.
Section 17A-687. Service generally.
Section 17A-688. --
Section 17A-700. Reserved.
Part B. License
Section 17A-701. Required.
Section 17A-702. Inspection of equipment.
Section 17A-703. Fee.
Section 17A-704. Term.
Section 17A-705. Identification of license on equipment and trucks.
Section 17A-706. --
Section 17A-730. Reserved.

ARTICLE XI.

INDIVIDUAL AEROBIC WASTEWATER SYSTEMS

Section 17A-731. Individual aerobic wastewater systems.
Section 17A-732. Discharge of wastewater effluent prohibited.
Section 17A-733. Requirements for installation, operation, and maintenance.
Section 17A-734. Establishing responsibility for compliance and violation.
Section 17A-735. --
Section 17A-799. Reserved.

ARTICLE XII.

PRETREATMENT FACILITY SERVICE AND WASTEWATER TRANSPORTING AND DISPOSAL

Division 1. General Provisions

Section 17A-800. Definitions.
Section 17A-801. Pretreatment facility service and wastewater transporting license.
Section 17A-802. Identification.
Section 17A-803. License fee.
Section 17A-804. Equipment, vehicles and receptacles.
Section 17A-805. Inspection and registration fee.
Section 17A-806. Disposal of wastewater.
Section 17A-807. --
Section 17A-810. Reserved.

Division 2. Record Keeping and Reporting

Section 17A-811. Industrial users contract for services, transportation and disposal.
Section 17A-812. Record keeping logs and forms.
Section 17A-813. Service log for industrial users.
Section 17A-814. Transportation log for industrial users.
Section 17A-815. Disposal log.
Section 17A-816. --
Section 17A-819. Reserved.

Division 3. Site Inspections

Section 17A-820. Inspection of wastewater source or site.
Section 17A-821. --
Section 17A-829. Reserved.

Division 4. Enforcement and Penalties

Section 17A-830, --
Section 17A-841. Reserved.
Section 17A-842. License, denial, revocation or suspension.
Section 17A-843. Enforcement authority.

ARTICLE I. IN GENERAL

SECTION 17A-1. DEFINITIONS.

The following words, terms and phrases, when used in this chapter, shall have the meanings ascribed to them in this section, except where the context clearly indicates a different meaning:

(A.1) *Act* or *the Act* means the Federal Water Pollution Control Act, also known as the Clean Water Act, as amended, 33 USC 1251 et seq.

(A.2) *Approval authority* means the director in a national pollutant discharge elimination system (NPDES) State with an approved State pretreatment program and the appropriate Regional Administrator of the EPA in a non-NPDES State or NPDES State without an approved State pretreatment program. Currently, Oklahoma does have a NPDES State-approved pretreatment program.

(A.3) *Authorized representative of the industrial user.*

a. if the industrial user is a corporation, authorized representative means:

1. the president, secretary, treasurer, or a vice-president of the corporation in charge of a principal business function, or any other person who performs similar policy or decision-making functions for the corporation;

2. the manager of one or more manufacturing, production, or operation facilities employing more than 250 persons or having gross annual sales or expenditures exceeding $25,000,000.00 (in second-quarter 1980 dollars), if authority to sign documents has been assigned or delegated to the manager in accordance with corporate procedures;

b. if the industrial user is a partnership, or sole proprietorship, an authorized representative means a general partner or proprietor, respectively;

c. if the industrial user is a Federal, State or local governmental facility, an authorized representative means a director or highest official appointed or designated to oversee the operation and performance of the activities of the government facility, or his/her designee;

d. the individuals described in Paragraphs (a) through (c) above may designate another authorized representative if the authorization is in writing, the authorization specifies the individual or position responsible for the overall operation of the facility from which the discharge originates or having overall responsibility for environmental matters for the entity, and the written authorization is submitted to the City.

(B.1) *Biochemical oxygen demand 5 (BOD 5* or *BOD5)* means the quantity of oxygen utilized in the biochemical oxidation of organic matter under standard laboratory procedure, five days at 20 degrees centigrade expressed in terms of weight and concentration (milligrams per liter (mg/l)).

(B.2) *Building sewer* means a sewer conveying wastewater from the premises of a user to the municipal sewage treatment facility.

(B.3) *Bypass* means the intentional diversion of waste streams from any portion of the industrial user's treatment facility.

(C.1) *Categorical pretreatment* or *categorical standard* means any regulation containing pollutant discharge limits promulgated by the U.S. EPA in accordance with § 307(b) and (c) of the Act (33 USC 1317), as amended, which apply to a specific category of industrial users and which appear in 40 CFR Chapter I, Subchapter N, Parts 405 through 17A1, as amended.

(C.2) *City* means The City of Piedmont or any authorized person acting in its behalf.

(C.3) *Color* means the optical density at the visual wavelength of maximum absorption, relative to distilled water. One hundred percent transmittance is equivalent to zero optical density.

(C.4) *Composite sample* means the sample resulting from the combination of individual wastewater samples taken at selected intervals based on an increment of either flow or time.

(C.5) *Consistent removal* means reduction in the amount of pollutant or alteration of the nature of the pollutant by the wastewater treatment system to a less toxic or harmless state in the effluent which is achieved by the system in 95 percent of the samples taken when measured according to the procedures set forth in § 403.7(c)(2) of Title 40 of the Code of Federal Regulations, Part 403, "General Pretreatment Regulations for Existing and New Sources of Pollution," promulgated pursuant to the Act.

(C.6) *Control authority* means the "approval authority," defined hereinabove, or the office of the Utilities Director.

(C.7) *Cooling water* means the water discharged from any use such as air conditioning, cooling or refrigeration, or to which the only pollutant added is heat.

(C.8) *DEQ* and *HEALTH DEPARTMENT* means the Oklahoma State Department of Environmental Quality, its successors, designees and assigns.

(D.1) *Direct discharge* means the discharge of treated or untreated wastewater directly to the municipal wastewater collection and treatment system.

(D.2) *Director* or *Director of Utilities* means the person designated by the City to supervise the operation of the municipal wastewater collection and treatment system works and who is charged with certain duties and responsibilities by this chapter, or his duly authorized representative.
(E.1) *Environmental Protection Agency* or *EPA* means the United States Environmental Protection Agency or, where appropriate, the term may also be used as a designation for the Administrator or other duly authorized official of said agency.

(E.2) *Existing source* means any source of discharge, the construction or operation of which commenced prior to the publication of proposed categorical pretreatment standards which will be applicable to such source if the standard is thereafter promulgated in accordance with § 307 of the Act.

(F.1) *Reserved.*

(G.1) *Grab sample* means an individual sample collected over a period of time not exceeding 15 minutes.

(H.1) *Holding tank waste* means any waste from holding tanks including, but not limited to vessels, chemical toilets, campers, trailers, septic tanks, and vacuum-pump tank trucks.

(I.1) *Indirect discharge* or *discharge* means the introduction of pollutants into a POTW from any nondomestic source regulated under § 307(b) or (c) or (d) of the Act (33 USC 1317), as amended.

(I.2) *Industrial user* means a nondomestic source of indirect discharge which does not necessarily constitute a "discharge of pollutants" under regulations issued pursuant to the act.

(I.3) *Interference* means a discharge which alone or in conjunction with a discharge or discharges from other sources:

a. inhibits or disrupts the POTW, its treatment processes or operations or its sludge processes, use or disposal; and

b. which causes a violation of the City's NPDES permit or prevents sewage sludge use or disposal in compliance with any of the following statutory/regulatory provisions or permit issued thereunder (or more stringent State or local regulations): § 405 of the Clean Water Act; the Solid Waste Disposal Act (SWDA), including Title II, commonly referred to as the Resource Conservation and Recovery Act (RCRA); any State regulations contained in the sludge management plan prepared pursuant to Subtitle D of the SWDA; the Clean Air Act; the Toxic Substances Control Act; and the Marine Protection, Research Sanctuaries Act.

(J.1) *Reserved.*

(K.1) *Reserved.*

(L.1) *Reserved.*

(M.1) *Maximum allowable discharge limit* means the maximum concentration (or loading) of a pollutant allowed to be discharged at any time, determined from the analysis of a discrete or composite sample collected, independent of the industrial flow rate and the duration of the sampling event.

(M.2) *Medical waste* means isolation wastes, infectious agents, human blood and blood byproducts, pathological wastes, sharps, body parts, fomites, etiologic agents, contaminated bedding, surgical wastes, potentially contaminated laboratory wastes and dialysis wastes.

(M.3) *Monthly average limit* means the numerical value by which a pollutant is limited to be discharged over any calendar month. Compliance with the monthly average limit shall be determined from the numerical value of all samples taken during any calendar month.

(M.4) *Municipal systems* means sanitary sewage collection systems constructed, operated or maintained by a municipality or trust for the benefit of such a municipality.

(N.1) *National Categorical Pretreatment Standard* or *pretreatment standard* means any regulation containing pollutant discharge limits promulgated by the EPA in accordance with § 307(B) and (C) of the Act (33 USC 1346), as amended, which applies to industrial users. This term includes, but is not limited to, prohibitive discharge limits established pursuant to 40 CFR 403.5.

(N.2) *National pollution discharge elimination system permit* or *NPDES permit* means a permit issued pursuant to § 402 of the Act and 40 CFR 403.5 (33 USC 1342).

(N.3) *National prohibitive discharge standard* or *prohibitive discharge standard* means any regulation developed under the authority of § 307(b) of the Act and 40 CFR 403.5, as amended.

(N.4) *New source* means:

a. any building, structure, facility or installation from which there is or may be a discharge of pollutants, the construction of which commenced after the publication of proposed pretreatment standards under § 307(c) of the Act which will be applicable to such source if such standards are thereafter promulgated in accordance with that section, provided that:

1. the building, structure, facility or installation is constructed at a site at which no other source is located; or

2. the building, structure, facility or installation totally replaces the process or production equipment that causes the discharge of pollutants at an existing source; or

3. the production or wastewater generating processes of the building, structure, facility or installation are substantially independent of an existing source at the same site. In determining whether these are substantially independent, factors such as the extent to which the new facility is integrated with the existing plant, and the extent to which the new facility is engaged in the same general type of activity as the existing source, should be considered.

b. construction on a site at which an existing source is located results in a modification rather than a new source if the construction does not create a new building, structure, facility or installation meeting the criteria of Subsection a.2 or a.3 above but otherwise alters, replaces, or adds to existing process or production equipment.

c. construction of a new source as defined under the paragraph has commenced if the owner or operator has:

1. begun, or caused to begin as part of a continuous on-site construction program:

(i) any placement, assembly, or installation of facilities or equipment; or

(ii) significant site preparation work including clearing, excavation, or removal of existing buildings, structures, or facilities which is necessary for the placement, assembly, or installation of new source facilities or equipment; or

2. entered into a binding contractual obligation for the purchase of facilities or equipment which are intended to be used in its operation within a reasonable time. Options to purchase or contracts which can be terminated or modified without substantial

loss, and contracts for feasibility, engineering, and design studies do not constitute a contractual obligation under this paragraph.

(N.5)*Noncontact cooling water* means water used for cooling which does not come into direct contact with any raw material, intermediate product, waste product, or finished product.

(N.6) *Normal production day* means a production day that conforms to information regarding the quantity and quality by which the discharge is permitted.

(O.1) *Reserved.*

(P.1) *Pass-through* means a discharge which exits the POTW into waters of the United States in quantities or concentrations which, alone or in conjunction with a discharge or discharges from other sources, are a cause of a violation of any requirement of the City's NPDES permit (including but not limited to an increase in the magnitude or duration of a violation).

(P.2) *Person* means any individual, partnership, copartnership, firm, company, corporation, association, joint stock company, trust, estate, governmental entity or any other legal entity, or their legal representatives, agents or assigns. This definition includes all Federal, State or local governmental entities.

(P.3) *pH* means a measure of the acidity or alkalinity of a substance, expressed in standard units.

(P.4) *Pollutant* means any dredged soil, solid waste, incinerator residue, sewage, garbage, sewage sludge, munitions, medical wastes, chemical wastes, industrial wastes, biological materials, radioactive materials, heat, wrecked or discharged equipment, rock, sand, cellar dirt, agricultural and industrial wastes, and the characteristics of the wastewater (i.e., pH, temperature, TSS, turbidity, color, BOD, chemical oxygen demand (COD), toxicity, odor).

(P.5) *Pollution* means the manmade or man-induced alteration of the chemical, physical, biological, and radiological integrity of water.

(P.6) *Pretreatment* or *treatment* means the reduction of the amount of pollutants, the elimination of pollutants, or the alteration of the nature of pollutants, or the alteration of the nature of pollutant properties in wastewater to a less harmful state prior to or in lieu of discharging or otherwise introducing such pollutants into a POTW. This reduction or alteration can be obtained by physical, chemical or biological processes, or process changes, or other means, except by diluting the concentration of the pollutants unless allowed by an applicable pretreatment standard.

(P.7) *Pretreatment requirements* means any substantive or procedural requirement related to pretreatment, other than a national pretreatment standard, imposed on an industrial user.
(P.8) *Pretreatment standards* or *standards* means all prohibitive discharge standards, categorical pretreatment standards, and local limits.

(P.9) *Prohibited discharge standards* or *prohibitive discharges* means absolute prohibitions against the discharge of certain substances; these prohibitions appear in Section 17A-211 of this chapter.

(P.10) *Publicly owned treatment works (POTW)* or *municipal wastewater collection and treatment system* means a "treatment work" as defined by § 212 of the Act (33 USC 1292) which is owned in this instance by the City. This definition includes any devices or systems used in the collection,

storage, treatment, recycling and reclamation of sewage or industrial wastes and any conveyances which convey wastewater to a treatment plant. The term also means the municipal entity having jurisdiction over the industrial users and responsibility for the operation and maintenance of the treatment works. For the purposes of this chapter, "POTW" shall also include any sewers that convey wastewaters to the POTW from persons outside the City who are, by contract or agreements with the City, users of the City's POTW.

(P.11) *POTW treatment plant* means that portion of the POTW designed to provide treatment of wastewater.

(P.12) *Peak day limit* means the concentration of a pollutant not to be exceeded when measured by an instantaneous grab sample taken at any time during a normal production day. If only one sample is taken during a calendar month, the peak day limit is not applicable to determine compliance, the monthly average limit will be used to determine user compliance.

(Q.1) *Reserved.*

(R.1) *Residential domestic user* shall mean any contributor to or user of the Piedmont sanitary sewer and wastewater system whose discharge is, determined by the Director to be, primarily of a character discharged into the sanitary sewer system of a residential or housekeeping unit. Any user discharging industrial waste as a part or portion of its regular discharge shall not be deemed a residential domestic user.

(R.2) *Residential or housekeeping unit* shall mean a unit or units which are maintained and operated solely for the use and benefit of the occupants dwelling in said unit or units as their primary place of residence, including, but not limited to, residential houses, multifamily residential houses, duplexes, triplexes, apartments, apartment complexes, condominiums, condominium complexes, mobile homes, and mobile home parks.

(S.1) *Septic tank waste* means any sewage from holding tanks such as vessels, chemical toilets, campers, trailers, and septic tanks.

(S.2) *Sewage* means human excrement and gray water (household showers, dishwashing operations, etc.).

(S.3) *Significant industrial user* means:

(a) industrial users subject to categorical pretreatment standards; and

(b) any other industrial user that:

(i) discharges an average of 25,000 gpd or more of process wastewater,

(ii) contributes a process waste stream which makes up five percent or more of the average dry weather hydraulic or organic capacity of the treatment plant or,

(iii) is designated as significant by the City on the basis that the industrial user has a reasonable potential for adversely affecting the POTW's operation or for violating any pretreatment standard or requirement.

(S.4) *Slug load* means any discharge at a flow rate or concentration which could cause a violation of the prohibited discharge standards in Section 17A-211 of this chapter or any discharge of a

nonroutine, episodic nature, including, but not limited to, an accidental spill or noncustomary batch discharge.

(S.5) *Standard analysis methods* shall mean the examination and analytical procedures set forth in the latest edition at the time of analysis of "Methods for Chemical Analysis of Water and Wastes" as approved by the Environmental Protection Agency's Water Quality Control Laboratory, Cincinnati, Ohio, or other procedures set forth in the Federal regulations, 40 CFR 136, Guidelines Establishing Test Procedures for the Analysis of Pollutants.

(S.6) *Standard industrial classification (SIC)* means a classification pursuant to the Standard Industrial Classification Manual issued by U.S. Office of Management and Budget.

(S.7) *Stormwater* means any flow occurring during or following any form of natural precipitation and resulting therefrom, including but not limited to rain, snow, sleet, hail and snow melt.

(S.8) *Sewage collection systems* includes gravity sewage collection lines not larger than 12 inches in diameter and except systems constructed in whole or in part with funds from EPA and/or administered by DEQ.

(S.9) *Small commercial sewage treatment system* means a sewage treatment system which serves a public or commercial establishment which exhibits a flow of not greater than 5,000 gallons per day. This includes such establishments as small restaurants, retail stores, and commercial office buildings, but does not include residential systems, alternative systems, lift stations, discharging systems, or land treatment systems.

(T.1) *Total suspended solids* or *suspended solids* means the total suspended matter that floats on the surface of, or is suspended in, water, wastewater or other liquids, and which is removable by laboratory filtering.

(T.2) *Toxic pollutant* means any pollutant or combination of pollutants listed as toxic in regulations promulgated by the Administrator of the Environmental Protection Agency under the provisions of § 307 of the Clean Water Act (33 USC 1317), as amended, or other acts or regulations promulgated by the United States or the State of Oklahoma.

(T.3)*Treatment plant effluent* means any discharge of pollutants from the POTW into waters of the State.

(U.1) *User* means any person who contributes, causes or permits the contribution of wastewater into the City's municipal wastewater collection and treatment system.

(V.1) *Reserved.*

(W.1) *Wastewater* or *sewage* means the liquid and water-carried industrial or domestic wastes from all sources, including, but not limited to, dwellings, commercial buildings, industrial facilities, manufacturing facilities, and institutions, together with any groundwater, surface water, and stormwater that may be present, whether treated or untreated, and which flows into or is permitted to enter the municipal wastewater collection treatment system.

(W.2) *Wastewater discharge permit* has the meaning as set forth in this chapter and referenced in 40 CFR 403.8(f)(1)(iii).

(W.3) *Waters of the State* means all streams, lakes, ponds, marshes, watercourses, waterways, wells, springs, reservoirs, aquifers, irrigation systems, drainage systems and all other bodies or accumulations of water, surface or underground natural or artificial, public or private, which are contained within, flow through, or border upon the State or any portion thereof.

(X.1) *Reserved.*

(Y.1) *Reserved*

(Z.1) *Reserved.*

SECTION 17A-2. ABBREVIATIONS.

For purposes of this chapter, the following abbreviations shall have the designated meanings:

BOD --biochemical oxygen demand.

CFR --Code of Federal Regulations.

COD --chemical oxygen demand.

EPA --U.S. Environmental Protection Agency.

gpd --gallons per day.

l --Liter.

mg --milligrams.

mg/l --milligrams per liter.

NPDES --National Pollutant Discharge Elimination System.

O&M --operation and maintenance.

POTW --publicly owned treatment works.

RCRA --Resource Conservation and Recovery Act.

SIC --standard industrial classification.

SWDA --Solid Waste Disposal Act (41 USC 6901 et seq.).

TSS --total suspended solids.

USC --United States Code.

SECTION 17A-3. PURPOSE AND POLICY.

A. This chapter sets forth uniform requirements for users of the wastewater collection system and publicly owned treatment works (POTW) for the City and enables the City to comply with all applicable State and Federal laws, including but not limited to the Clean Water Act (33 USC 1251 et seq.) and the General Pretreatment Regulations (40 CFR 40 et seq.). The objectives of this chapter are:

(1) to prevent the introduction of pollutants into the POTW that will interfere with the operation of the POTW or the disposal of municipal sludge or otherwise contaminate the resulting sludge;

(2) to prevent the introduction of pollutants into the POTW which will pass through the POTW, inadequately treated, into receiving waters or otherwise be incompatible with the POTW;

(3) to ensure that the quality of the wastewater treatment plant sludge is maintained at a level which allows its use and disposal in compliance with applicable statutes and regulations;

(4) to protect POTW personnel who may be affected by wastewater and sludge in the course of their employment and to protect the general public;

(5) to improve the opportunity to recycle and reclaim wastewater and sludge from the POTW;

(6) to provide for fees for the equitable distribution of the cost of operation, maintenance and improvement of the POTW; and

(7) to enable the City to comply with its NPDES permit conditions, sludge use and disposal requirements and any other Federal or State laws to which the POTW is subject.

B. This chapter shall apply to all industrial users of the POTW. Generally, this chapter authorizes the issuance of wastewater discharge permits; authorizes monitoring, compliance and enforcement activities; establishes administrative review procedures; requires industrial user reporting; and provides for the setting of fees for the equitable distribution of costs resulting from the program established herein.

C. This chapter shall apply to the City and to persons outside the City who are, by contract or agreement with the City, users of the City municipal wastewater collection and treatment system. Except as otherwise provided herein, the Director of Utilities shall administer, implement, and enforce the provisions of this chapter.

SECTION 17A-4. ADMINISTRATION.

Except as otherwise provided herein, the Director shall administer, implement and enforce the provisions of this chapter. Any powers granted to or duties imposed upon the Director may be delegated by the Director to other City personnel.

SECTION 17A-5. CONNECTIONS WITH STORM SEWERS OR NATURAL OUTLET.

No person shall deposit or discharge any wastewater, industrial waste, or other polluted waters or liquids on public or private property, in or adjacent to any natural outlet or any natural watercourse, or in any storm sewer within the City, or in any area under the jurisdiction of the City without the approval of the Environmental Protection Agency and the Department of Environmental Quality.

SECTION 17A-6. COSTS OF SEWERS IN PRIVATE DEVELOPMENTS.

A. Any sanitary sewer mains or submains serving or within any new subdivision shall be constructed to sufficient size and capacity to accommodate the anticipated conditions resulting from gravity flow from or to any mains or submains intended to serve that subdivision and any other property that may be connected into said mains or submains at a future date.

B. The property owner shall pay a proportionate share of the construction based on the cost of the project minus lift stations and plant cost divided by diameter of pipe used, all multiplied by 8. The construction of such sanitary sewer mains or submains in excess of the cost required to construct eight-inch-diameter mains or submains shall be borne by the City.

C. Participation by the City in any costs shall be subject to availability of voter-approved bond funds.

D. If the developer desires to award his own contract for any of the sanitary sewer facilities, then the entire cost shall be paid by the developer with no participation by the City.

E. Payment to the City for engineering services shall be in accordance with the General Schedule of Fees.

SECTION 17A-7. TAMPERING WITH SEWAGE WORKS PROHIBITED.

No person shall maliciously, willfully, or negligently break, damage, destroy, uncover, deface, or tamper with any structure, appurtenance, or equipment that is a part of the sewage works.

SECTION 17A-8. DEPARTMENT OF ENVIRONMENTAL QUALITY PERMIT REQUIREMENT, EXEMPTIONS.

A. The City adopts the rules and regulations of the Department of Environmental Quality for sanitary sewer line standards as part of the minimum standards and requirements for sanitary sewer lines, subject to any additional and/or more restrictive requirements or standards adopted or established by the City.

B. The Department of Environmental Quality has adopted rules and regulations that exempt certain sanitary sewer extensions from the requirement of having a State construction permit issued prior to construction, if the sanitary sewer system is in compliance with all Department of Environmental Quality requirements. The following categories of systems may receive the exemption: gravity sewage collection lines not larger than 12 inches in diameter. Any single submittal of a sewage collection system which includes a sewage pump station cannot be exempted from the permit requirement.

C. The City cannot grant approval of sanitary sewer extensions to sewage treatment plants, lift stations and interceptor lines which have reached their treatment or hydraulic capacities, both routinely or during peak demand periods.

D. All systems constructed in whole or in part with funds from United States Environmental Protection Agency and/or with other funds administered by this Department cannot be exempt from the permit requirement.

SECTION 17A-9. PROPER MAINTENANCE OF SEWER SYSTEM.

A. *Generally.* All persons and contracting parties utilizing or connecting to the City's sewer system, either directly or indirectly, shall exercise reasonable measures to prevent a break in or a leak from any private sewer line and to expeditiously repair any such defective private sewer line, and thereby prevent any threat to the health, safety, or welfare of the public by maintaining all private sewer lines in watertight and non-leaking condition and in accordance with all City standards and specifications.

B. *Public nuisance.* The Director is hereby authorized to declare a break in or a leak from a private sewer line, directly or indirectly connected to the City's sewer system, which causes a threat to the health, safety, or welfare of the public, to be a public nuisance. Upon said declaration by the Director that a public nuisance exists, the contracting party or a responsible person at the serviced premises shall be notified by the City that a public nuisance exists, that said nuisance must be remedied, and that any failure or refusal to make or to cause to be made the necessary repairs may result in the suspension of water service to all premises contributing to the public nuisance.

C. *Hearing.* Upon the notification of the contracting party or a responsible person at the serviced premises of the declaration of a public nuisance the contracting party, or another on his behalf, shall within 24 hours demonstrate to the Director that a licensed plumber has been retained or arrangements have been made with a licensed plumber for the purposes of remedying the public nuisance within a time period deemed reasonable by the Director or shall show other good cause why water service shall not be suspended pending the repair of the aforementioned defective private sewer line. Said necessary repairs or arrangements for repairs to the defective private sewer line must be reasonably verified by the licensed plumber to the Director within the aforementioned 24-hour notice period. Should said necessary repairs be made by a licensed plumber or should arrangements be made with a licensed plumber for said necessary repairs to be made within a reasonable time period acceptable to the Director, then service to said premises shall not be suspended hereunder.

D. *Suspension of water service for failure to comply.* If any contracting party fails or refuses to contact the Director to show cause why water service should not be suspended to the serviced premises, or to demonstrate that a licensed plumber has been retained or arrangements have been made with a licensed plumber to make the necessary repairs within a reasonable time, or if any contracting party fails or refuses to make or cause to be made such repairs as necessary to terminate the public nuisance within a reasonable time, or has failed or refused to have the licensed plumber verify the arrangement to make the necessary repairs hereunder by contacting the Director, such a failure or refusal shall be cause for the suspension by the City of water service at the serviced premises without further notice. In addition, should said necessary repairs not have been made within said reasonable time, or pursuant to the standards, specifications, and requirements of the City, or should said repair not have been made pursuant to said arrangements, then said water service to the serviced premises shall be suspended. Once suspended, water service to any serviced premises shall not be reinstated until such time as the aforementioned necessary repairs are completed and inspected by the City and costs paid, or good cause shown by the responsible party.

E. *Responsible party.* All repairs required under this article and all maintenance of private sewer lines, and any expense resulting therefrom, shall be the responsibility of the contracting party, the owner, or the occupant of the premises serviced by said private sewer line.

F. *Addition to other regulations.* This section shall be in addition to any other ordinance or regulation, or authority of the City or the Health Department to deal with a public nuisance.

G. *Contract.* This section shall be incorporated in and be a part of each and every contract for water or sewer service provided by the City within the City limits.

H. *Denial of water connection.* The Director is hereby authorized to deny initiation of water service to any serviced premises which has a defective private sewer line or system.

I. *Definitions.*

(1) *Costs* as referred to herein shall include all inspection fees, water service initiation and suspension charges, and any other fee provided for by this Code.

(2) *Serviced premises* as referred to herein shall include any and all premises which directly or indirectly contribute effluent to the defective private sewer line causing or contributing to the public nuisance.

(3) *Contracting party* as referred to herein shall include any person, party or parties, corporation, association, or other entity or entities which has contracted for or is requesting a contract for sewer service from or in the City.

SECTION 17A-10. MEASUREMENTS, TESTS AND ANALYSES OF WASTES.

A. All measurements, tests, and analyses of the characteristics of waters and wastes to which reference is made in this chapter shall be determined in accordance with the procedures set forth in Section 17A-340 and Section 17A-341 and shall be determined at the control manhole provided or upon suitable samples taken at said control manhole.

B. For purposes of reporting wastewater characteristics required under this section, the determination of measurements, tests, and analyses of wastes flow shall be made by an independent firm or laboratory approved by the City. The time of collection of the sample shall be at the sole discretion of the City, but at least on an annual basis for the purpose of determining the industrial wastewater contribution to the City's sewerage system.

SECTION 17A-11. CONTROL MANHOLES.

Where required by the City Engineer or the Director, the owner of any property serviced by a building sewer carrying industrial wastes shall install a suitable control manhole together with such necessary meters and other appurtenances in the building sewer to facilitate observation, sampling, and measurement of the wastes. Such manhole, when required, shall be accessible and safely located and shall be constructed in accordance with plans approved by the City Engineer or Director. The manhole shall be installed by the owner, at his expense, and shall be maintained by him so as to be safe and accessible at all times. Each user discharging in excess of twenty-five thousand (25,000) gallons per day shall provide a suitable manhole as described herein.

SECTION 17A-12. REQUIRING BACKWATER VALVES.

A. A backwater valve must be installed and maintained on a sanitary sewer service line whenever the lowest sanitary sewer connection in any building or structure is lower than the next upstream manhole on the Piedmont sanitary sewer system.

B. A backwater valve must be installed whenever a sanitary sewer service line meeting the conditions in Paragraph (a) above is, directly or indirectly, connected or re-connected to the Piedmont sanitary sewer system.

C. A backwater valve must be installed whenever a sanitary sewer service line meeting the conditions in Paragraph (a) above is repaired, less and except should an operable backwater valve already be properly installed on that line. Provided, however, the removal of roots from inside the sanitary sewer service line shall not be considered a repair that requires the installation of a backwater valve under this subsection.

D. Backwater valves must be constructed and installed in accordance with the specifications established by the Utilities Director.

E. No person shall, directly or indirectly, connect or re-connect a sanitary sewer service line to the Piedmont sanitary sewer system or allow another to connect or re-connect a sanitary sewer service line to the Piedmont sanitary sewer system without the required permits and licenses having been obtained.

F. Any person repairing an inoperable backwater valve must repair or replace the backwater valve before reconnecting the sanitary sewer service line or reinstituting service through such sanitary sewer service line.

G. The Piedmont sanitary sewer system is defined as the City owned sanitary sewer mains in an easement owned by Piedmont or a public right-of-way and the City owned wastewater treatment plants. The Piedmont sanitary sewer system does not include the sanitary sewer service line carrying sewage from any privately owned property, building, or structure nor does it include the riser, tap, wye, tapping saddle, or other connection attaching the sanitary sewer service line to the City sanitary sewer main.

H. The sanitary sewer service line is owned by the private property owner whose property, building, or structure is served or potentially served. The sanitary sewer service line includes the riser, tap, wye, tapping saddle, or other connection attaching the sanitary sewer service line to the City owned sanitary sewer main.

I. No person shall remove or render inoperable a backwater valve.

J. Once a backwater valve is installed, it is the responsibility of the property owner and any tenant or lessee to insure that any sanitary sewer service line has a backwater valve and to maintain the backwater valve in an operable condition.

K. No person shall sell real property without disclosing whether a backwater valve has been installed on the sanitary sewer service line.

L. Any person that utilizes or operates a sanitary sewer service line, which is required by this ordinance or any other ordinance or code to install and maintain a backwater valve, without an operable backwater valve shall be liable and responsible for any sewer backup onto the property or into any building or structure being served or potentially served by that sanitary sewer service line and for any costs, injuries, or losses resulting from such sewer backup.

ARTICLE II.

ADMINISTRATIVE ENFORCEMENT REMEDIES

SECTION 17A-31. NOTIFICATION OF VIOLATION.

Whenever the Director finds that any user has violated or is violating this chapter, a wastewater discharge permit or order issued hereunder, or any other pretreatment requirement, the Director may serve upon said user a written notice of violation. Within the stated number of days, in no case more than five days, of the receipt of this notice, an explanation of the violation and a plan for the satisfactory correction and prevention thereof, to include specific required actions, shall be submitted by the user to the Director. Submission of this plan in no way relieves the user of liability for any violations occurring before or after receipt of the notice of violation. Nothing in this chapter shall limit the authority of the City to take any action, including but not limited to emergency actions or any other enforcement action, without first issuing a notice of violation.

SECTION 17A-32. CONSENT ORDERS.

The Director is hereby empowered to enter into consent orders, assurances of voluntary compliance, or other similar documents establishing an agreement with any user responsible for noncompliance. Such orders will include specific action to be taken by the user to correct the noncompliance within a time period also specified by the order. Consent orders shall have the same force and effect as the administrative orders issued pursuant to this chapter and shall be judicially enforceable.

SECTION 17A-33. SHOW CAUSE HEARING.

The Director may order any user which causes or contributes to violation(s) of this chapter, wastewater discharge permits, or orders issued hereunder, or any other pretreatment standard or requirement, to appear before the Director and show cause why a proposed enforcement action should not be taken. Notice shall be served on the user specifying the time and place for the meeting, the proposed enforcement action, the reasons for such action, and a request that the user show cause why this proposed enforcement action should not be taken. The notice of the meeting shall be served personally or by registered or certified mail (return receipt requested) at least five days prior to the hearing. Such notice may be served on any authorized representative of the user. Whether or not the user appears as ordered, immediate enforcement action may be pursued following the hearing date. A show cause hearing shall not be a prerequisite for taking any other action against the user; taking enforcement action; or invoking an immediate emergency suspension of discharge where the discharge threatens imminent or substantial endangerment to the health, safety or welfare of persons.

SECTION 17A-34. COMPLIANCE ORDERS.

When the Director finds that a user has violated or continues to violate this chapter, wastewater discharge permits or orders issued hereunder, or any other pretreatment standard or requirement, the Director may issue an order to the user responsible for the discharge directing that the user come into compliance within the stated number of days, but in no case more than two days. If the user does not come into compliance within the stated number of days, sewer service shall be discontinued unless adequate treatment facilities, devices, or other related appurtenances are installed and properly operated. Compliance orders may also contain other requirements to address the noncompliance, including additional self-monitoring, and management practices designed to minimize the amount of pollutants discharged to the sewer. A compliance order may not extend the deadline for compliance established for a Federal pretreatment standard or requirement, nor does a compliance order release the user of liability for any violation, including any continuing violation. Issuance of a compliance order shall not be a prerequisite to taking any other action against the user.

SECTION 17A-35. CEASE AND DESIST ORDERS.

A. When the Director finds that a user is violating this chapter, the user's wastewater discharge permit, any order issued hereunder, or any other pretreatment standard or requirement, or that the user's past violations are likely to recur, the Director may issue an order to the user directing it to cease and desist all such violations and directing the user to:

(1) immediately comply with all requirements.

(2) take such appropriate remedial or preventive action as may be needed to properly address a continuing or threatened violation, including halting operations and/or termination of the discharge.

B. Issuance of a cease and desist order shall not be a prerequisite to taking any other action against the user.

SECTION 17A-36. EMERGENCY SUSPENSIONS.

A. The Director may immediately suspend a user's discharge, after informal notice to the user, whenever such suspension is necessary in order to stop an actual or threatened discharge which reasonably appears to present or cause an imminent or substantial endangerment to the health or welfare of persons. The Director may also immediately suspend a user's discharge, after notice and opportunity to respond, that threatens to interfere with the operation of the POTW, or which presents or may present an endangerment to the environment.

(1) any user notified of a suspension of its discharge shall immediately stop or eliminate its contribution. In the event of a user's failure to immediately comply voluntarily with the suspension order, the Director shall take such steps as deemed necessary, including immediate severance of the sewer connection, to prevent or minimize damage to the POTW, and its receiving stream, or endangerment to any individuals. The Director shall allow the user to recommence its discharge when the user has demonstrated to the satisfaction of the City that the period of endangerment has passed, unless the termination proceedings set forth in Article II are initiated against the user.

(2) a user that is responsible, in whole or in part, for any discharge presenting imminent endangerment shall submit a detailed written statement describing the causes of the harmful contribution and the measures taken to prevent any future occurrence to the Director prior to the date of any show cause or termination hearing under Article II.

B. Nothing in this article shall be interpreted as requiring a hearing prior to any emergency suspension under this article. Nothing in this article shall be interpreted as precluding or limiting the authority of the City to take any action, including but not limited to other enforcement actions, without issuing a notice.

SECTION 17A-37. TERMINATION OF DISCHARGE.

A. In addition to those provisions in Section 17A-306 of this chapter, any user that violates the restrictions, prohibitions, requirements, conditions, wastewater discharge permits, or orders issued pursuant to this chapter is subject to discharge termination. Additionally, any user that violates the following is subject to termination of discharge:

(1) violation of wastewater discharge permit conditions.

(2) failure to accurately report the wastewater constituents and characteristics of its discharge.

(3) failure to report significant changes in operations or wastewater volume, constituents and characteristics prior to discharge.

(4) refusal of reasonable access to the user's premises for the purpose of inspection, monitoring and sampling.

(5) violation of the pretreatment standards in this chapter.

B. Such user will be notified of the proposed termination of its discharge and be offered an opportunity to show cause under Section 17A-33 why the proposed action should not be taken.

SECTION 17A-38. PRETREATMENT ENFORCEMENT RESPONSE GUIDE.

The Director is hereby authorized to establish an administrative procedure or plan to be known as the Pretreatment Enforcement Response Guide for the administration of this chapter and the enforcement of compliance with the provisions of this chapter. The Director may amend the Pretreatment Enforcement Response Guide from time to time as may be necessary to enforce compliance.

SECTIONS 17A-39--17A-60. RESERVED.

ARTICLE III.

JUDICIAL ENFORCEMENT REMEDIES

SECTION 17A-61. INJUNCTIVE RELIEF.

Whenever a user has violated a pretreatment standard or requirement or continues to violate the provisions of this chapter, wastewater discharge permits or orders issued hereunder, or any other pretreatment requirement, the Director may petition the Canadian County District Court through the Municipal Counselor for the issuance of a temporary or permanent injunction, as appropriate, which restrains or compels the specific performance of the wastewater discharge permit, order, or other requirement imposed by this chapter on activities of the industrial user. Such other action as appropriate for legal and/or equitable relief may also be sought by the City. A petition for injunctive relief need not be filed as a prerequisite to taking any other action against a user.

SECTION 17A-62. CIVIL PENALTIES.

A. Any user which has violated or continues to violate any provision of this chapter, any order or wastewater discharge permit hereunder, or any other pretreatment standard condition or requirement shall be liable to the City for damages to the extent permitted under State law. In the case of a monthly or other longterm average discharge limit, penalties shall accrue for each day during the period of the violation.

B. The City may seek to recover reasonable attorney's fees, court costs, and other expenses associated with civil damages or enforcement activities, including but not limited to sampling and monitoring expenses, attorney fees, court costs, interest, expenses and the cost of any actual damages incurred by the City.

C. In determining the amount of civil liability, the City may allege all relevant circumstances including, but not limited to, the extent of harm caused by the violation, the magnitude and duration, any economic benefit gained through the user's violation, corrective actions by the user, the compliance history of the user, and any other factor as justice requires.

D. Filing a suit for civil damages shall not preclude nor be a prerequisite for taking any other action against a user.

SECTION 17A-63. CRIMINAL PROSECUTION.

A. Any user who is found to have violated or failed to comply with any permit provision, order of the Director, any provision of this chapter, or with any order, rule, regulation or permit issued hereunder, and any user or person who has introduced into the POTW any substance which causes personal injury or property damage, or knowingly made any false statements, representations, or certifications in any application, record, report, plan or other documentation filed or required to be maintained, pursuant to this chapter, wastewater discharge permit or order; and any user or person who falsifies, tampers with or knowingly renders inaccurate any monitoring device or method required under this chapter, shall be guilty of an offense against the City. Each and every day on which a violation or failure shall occur or continue shall be deemed a separate and distinct offense. In addition to the penalties provided herein, the City may recover reasonable attorneys' fees, court costs, court reporters' fees and other expenses of litigation by appropriate suit at law or in equity against the person found to have violated or failed to comply with this chapter or any order, rule, regulation or permit issued hereunder. The issuance or collection of an administrative fee or charge or the assessment or collection of costs, as may also be provided for in this Code, shall not be a bar to or be a prerequisite for taking any other administrative or criminal action against the user or person.

B. Any person violating any provision of this chapter shall, upon conviction, be guilty of an offense punishable by a fine not to exceed $500 plus court costs and fees.

State law references: Penalties for ordinance violations, 11 O.S. § 14-111.

SECTION 17A-64. REMEDIES NONEXCLUSIVE.

The provisions in this chapter are not exclusive remedies. The City reserves the right to take any, all or any combination of these actions against a noncompliant user. Enforcement of pretreatment violations will generally be in accordance with the City's enforcement response plan. However, the City reserves the right to take other action against any user when the circumstances warrant. Further, the City is empowered to take more than one enforcement action against any noncompliant user. These actions may be taken concurrently.

SECTIONS 17A-65--17A-90. RESERVED.

ARTICLE IV.

SUPPLEMENTAL ENFORCEMENT ACTION

SECTION 17A-91. PERFORMANCE BONDS.

The Director may decline to reissue a wastewater discharge permit to any user which has failed to comply with the provisions of this chapter, any orders, or a previous wastewater discharge permit issued hereunder, unless such user first files a satisfactory bond, payable to the City, in a sum not to exceed a value determined by the Director to be necessary to achieve consistent compliance.

SECTION 17A-92. LIABILITY INSURANCE.

The Director may decline to reissue a wastewater discharge permit to any user which has failed to comply with the provisions of this chapter, any order, or a previous wastewater discharge permit issued

hereunder, unless the user first submits proof that it has obtained financial assurances sufficient to restore or repair damage to the POTW caused by its discharge.

SECTION 17A-93. WATER SUPPLY SEVERANCE.

Whenever a user has violated or continues to violate the provisions of this chapter, orders, or wastewater discharge permits issued hereunder, water service to the user may be severed. Service will only recommence, at the user's expense, after it has satisfactorily demonstrated its ability to comply; adequate assurance of future compliance; and payment of any charges, fines, fees or penalties due.

SECTION 17A-94. PUBLIC NUISANCES.

Any violation of this chapter, wastewater discharge permits, or orders issued hereunder, may be declared a public nuisance by the City and shall be corrected or abated as directed by the City. Any person(s) creating a public nuisance shall be subject to the provisions of the City Code governing such nuisances, including but not limited to reimbursing the City for any costs incurred in removing, abating or remedying said nuisance.

SECTION 17A-95--17A-120. RESERVED.

ARTICLE V.

AFFIRMATIVE DEFENSES TO DISCHARGE VIOLATIONS

SECTION 17A-121. UPSET.

A. For the purposes of this section, "upset" means an exceptional incident in which there is unintentional and temporary noncompliance with categorical pretreatment standards and/or local pretreatment standards because of factors beyond the reasonable control of the industrial user. An upset does not include noncompliance to the extent caused by operational error, improperly designed treatment facilities, inadequate treatment facilities, lack of preventive maintenance, or intentional, careless or improper operation.

B. An upset shall constitute an affirmative defense to an action brought for noncompliance with categorical pretreatment standards and/or local pretreatment standards if the requirements of Paragraph (c) are met.

C. An industrial user who wishes to establish the affirmative defense of upset shall demonstrate, through properly signed, contemporaneous operating logs, or other relevant evidence that:

(1) an upset occurred and the industrial user can identify the cause(s) of the upset.

(2) the facility was at the time being operated in a prudent and workmanlike manner and in compliance with applicable operation and maintenance procedures.

(3) the industrial user has submitted the following information to the City within 24 hours of becoming aware of the upset (if this information is provided orally, a written submission must be provided within five days):

(a) a description of the indirect discharge and cause of noncompliance.

(b) the period of noncompliance, including exact dates and times or, if not corrected, the anticipated time the noncompliance is expected to continue.

(c) steps being taken and/or planned to reduce, eliminate and prevent recurrence of the noncompliance.

(d) In an enforcement proceeding, the industrial user seeking to establish the occurrence of an upset shall have the burden of proof.

(e) Industrial users will have the opportunity for a judicial determination on any claim of upset only in an enforcement action brought for noncompliance with categorical pretreatment standards and/or local pretreatment standards.

(f) The industrial user shall control production of all discharges to the extent necessary to maintain compliance with categorical pretreatment standards and/or local pretreatment standards upon reduction, loss or failure of its treatment facility until the facility is restored or an alternative method of treatment is provided. This requirement applies in the situation where, among other things, the primary source of power of the treatment facility is reduced, lost or fails.

SECTION 17A-122. GENERAL/SPECIFIC PROHIBITIONS.

An industrial user shall have an affirmative defense to an enforcement action brought against it for noncompliance with the general and specific prohibitions of this chapter if it can prove that it did not know or have reason to know that its discharge, alone or in conjunction with discharges from other sources, would cause pass-through or interference and that either: (a) a local limit exists for each pollutant discharged and the industrial user was in compliance with each limit directly prior to, and during, the pass-through or interference, or (b) no local limit exists, but the discharge did not change substantially in nature or constituents from the user's prior discharge when the City was regularly in compliance with its NPDES permit, and in the case of interference, was in compliance with applicable sludge use or disposal requirements.

SECTION 17A-123. BYPASS.

A. For purposes of this section:

(1) *Bypass* means the intentional diversion of waste streams from any portion of an industrial user's treatment facility.

(2) *Severe property damage* means substantial physical damage to property, damage to the treatment facilities which causes the facilities to become inoperable, or substantial and permanent loss of natural resources which can reasonably be expected to occur in the absence of a bypass. Severe property damage does not mean economic loss caused by delays in production.

B. An industrial user may allow any bypass to occur which does not cause pretreatment standards or requirements to be violated, but only if it also is for essential maintenance to assure efficient operation. These bypasses are not subject to the provisions of Paragraphs (c) and (d) of this section.

(c) (1) if an industrial user knows in advance of the need for a bypass, it shall submit prior notice to the City, at least ten days before the date of the bypass if possible.

(2) an industrial user shall submit oral notice of an unanticipated bypass that exceeds applicable pretreatment standards to the City within 24 hours from the time it becomes aware of the bypass. A written submission shall also be provided within five days of the time the industrial user becomes aware of the bypass. The written submission shall contain a description of the bypass and its cause; the duration of the bypass, including exact dates and times, and, if the bypass has not been corrected, the anticipated time it is expected to continue; and steps taken or planned to reduce, eliminate and prevent reoccurrence of the bypass. The City may waive the written report on a case-by-case basis if the oral report has been received within 24 hours.

(d) (1) bypass is prohibited, and the City may take enforcement action against an industrial user for a bypass, unless:

a. bypass was unavoidable to prevent loss of life, personal injury or severe property damage.

b. there were no feasible alternatives to the bypass, such as the use of auxiliary treatment facilities, retention of untreated wastes, or maintenance during normal periods of equipment downtime. This condition is not satisfied if adequate backup equipment should have been installed in the exercise of reasonable engineering judgment to prevent a bypass which occurred during normal periods of equipment downtime or preventive maintenance; and

c. the industrial user submitted notices as required under Paragraph (c) of this section.

(2) the Director may approve an anticipated bypass, after considering its adverse effects, if the determines that the industrial user will meet the three conditions listed in Paragraph (d)(1) of this section.

SECTION 17A-124--17A-150. RESERVED.

ARTICLE VI.

CONNECTIONS TO PUBLIC SEWERS

DIVISION 1. GENERALLY

SECTION 17A-151. REQUIRED.

A. The owners of all lots lying alongside or abutting upon any alley or street upon which a lateral of the City's system of sanitary sewers is now, or hereafter will be laid, shall connect all water closets, urinals, sinks, or other places where refuse, slops, wastewater or domestic waste of any kind is accumulated or deposited, within 30 days after the completion of said lateral, except said connection may not be required of abutting owners who have existing septic systems which have been duly inspected, approved and authorized by the Health Department. The costs of such inspection shall be borne by the property owner. Such exception to connection to the City's sanitary sewer system may be granted only so long as the existing septic system meets the requirements of existing law.

B. No owner or occupant of such lots shall use any privy or urinal, or allow any refuse, slops, wastewater or domestic waste of any kind to accumulate upon such lots, until such connection with said system of sanitary sewers shall have been made as required in Subsection (a) above.

C. Any person violating any of the provisions of this section shall, upon conviction thereof, be fined for each offense, and each 24 hours continuance of such offense shall be deemed a separate offense.

SECTION 17A-152. CONNECTIONS TO LATERALS ONLY.

No private sewer connection, whether or not within the City limits, shall be made to any sewer line directly or indirectly connected with the City's sewer system other than to a lateral constructed to serve the private premises in question, except by special contract approved by the Public Works Director.

SECTION 17A-153. NOTICE TO MAKE CONNECTION.

The Code Enforcement Officer shall cause to be served on the owner or occupant of any buildings or establishments with any sewer connections that do not conform to the Provisions of this chapter, a notice in writing stating that the sewer connection must be made as required, giving 30 days time in which to make the proper connection. If, after 30 days from the day of the service of said notice, the proper connection has not been made, then no person shall maintain or use any sewer connection not conforming to the provisions hereof.

SECTION 17A-154--17A-180. RESERVED.

DIVISION 2. PERMIT AND INSPECTION

SECTION 17A-181. REQUIRED.

A. No person shall make or attempt to make any connection to a sewer:

(1) without first obtaining a sewer permit.

(2) until the sewer connection has been properly inspected as provided in this chapter.

B. If a sewer connection is made without a sewer permit and without inspection, then said connection shall be closed and disconnected from such sewer by order of the Public Works Director.

SECTION 17A-182. REIMBURSEMENT OF ASSESSMENT PAID BY CITY.

A. Whenever the construction cost of sanitary sewers has been or may be levied and assessed against the property abutting thereon, as provided by the laws of the state, and the City has paid or may be liable to pay such assessments in whole or in part from City funds, then any owner or occupant of any property abutting such sewers who makes application for permission to tap such sewers shall not be issued a permit unless he shall:

(1) have paid to the City the amount of the assessments that have been paid by the City prior to the issuance of the permit.

(2) agree in writing with the City that:

a. any unpaid or unmatured assessments levied against the property shall be or remain a lien against the property so long as the assessments remain unpaid; and

b. from the date of the issuance of the permit the unpaid assessments shall become and remain a lien in the same manner and form as is provided for in levying assessments against property abutting upon lateral sewers under the laws of the state, as if the same had been originally levied under the laws of the state. Such lien shall remain in force and effect until the assessments shall be fully paid and satisfied as provided by the statutes relating to the construction of lateral sewers.

B. The property owner or occupant shall be required:

(1) to pay the actual cost of the construction of the sewer properly chargeable to the abutting property, as provided under the laws of the state, and any interest that the City has been required to pay.

(2) to assume the payment of interest on outstanding and unpaid assessments.

C. Upon payment to the City of the assessment, a permit shall be issued to the owner or occupant to tap and use the sanitary sewer in the manner provided by the existing ordinances of the City relating to such connections.

SECTION 17A-183. CONNECTIONS WHERE NO SPECIAL ASSESSMENT MADE.

A. Whenever sanitary sewer mains or submains have been constructed, and the City has paid charges in whole or in part out of funds of the City, other than those charges provided for in Section 17A-182, and when any owner or occupant of any property abutting upon such sanitary sewer main or submain makes application for connecting to such sewer with a private line, no permit shall be issued to any abutting owner or occupant until such owner or occupant shall have paid to the City, prior to the issuance of such permit, his proportionate share of the cost of such sanitary sewer main or submain, which share, for each residential tap, shall be as established in Chapter 60, the General Schedule of Fees, and for each nonresident tap shall be 1/2 of the cost of the line abutting the property.

B. Such cost to the nonresidential property owner or occupant shall be determined by the following formula:

(1) cost of the project minus lift stations and plant cost, divided by the product of the linear feet of the project times pipe diameter in inches, all multiplied by half the number of linear feet abutting the main or submain times eight inches.

(2) where an owner or occupant has a large lot in excess of 150 linear feet abutting on a sanitary sewer main or submain, the lot size shall be computed on the basis of a maximum lot size of 150 linear feet on such main or submain.

(3) where any owner of property abutting upon a proposed sanitary sewer main or submain donates to the City an easement or right-of-way 20 feet in width over all his property abutting the alignment of the main or submain and said donation is 50 feet or fraction thereof in length, such owner for said proposed sewer shall in exchange for the donated easements or right-of-way receive a $100.00 credit for the first 50 feet or fraction thereof in length of donated easement or right-of-

way toward reducing the amount due for the connection permit charges set forth herein. This credit shall expire if not exercised by the donor prior to his transfer of the fee to said property.

The costs herein provided shall be in addition to all other fees.

SECTIONS 17A-184--17A-189. RESERVED.

DIVISION 3. STATE PERMIT EXEMPTION

SECTION 17A-190. MUNICIPAL SYSTEMS.

A. *Purpose.* The purpose of this division is to quality for exemptions from the Department of Environmental Quality construction permit requirement for wastewater collection systems, pursuant to Chapter 655 of the Oklahoma Administrative Code, entitled "Water Pollution Control Construction Standards," adopted by the Board of Environmental Quality on November 24, 1993. Gravity sewage construction lines not larger than 12 inches in diameter and small sewage treatment systems are the only systems eligible for the exemption from the requirements of issuance of State construction permits, provided all systems constructed in whole or in part with funds from the United States EPA and/or with funds administered by the DEQ shall not be exempt from the requirement of obtaining a State construction permit.

B. *System and connection requirement.* All municipal systems and any connection thereto must be constructed in compliance with the applicable regulations, rules and requirements of the DEQ or the regulations, rules and requirements regulations of the City, whichever standard is more stringent.

C. *Approval required.* All sewer line extensions to sewage treatment plants, lift stations, and interceptor lines must be approved by the Director prior to actual construction.

D. *Approval withheld.* Approval shall be withheld if the sewage treatment plant, lift station or interceptor line to which the sewer line extension is to attach has reached or, with the addition of the proposed sewer line extension, would reach treatment or hydraulic capacities. Further, approval shall also be withheld if the sewer line extension does not meet or exceed the standards of the DEQ and the City, or may be withheld for any other reason.

E. *Review and approval of plans and specifications for sewage collection systems.* Prior to construction, plans and specifications for sewage collection systems must be reviewed, approved and signed by a professional engineer licensed by the State of Oklahoma and designated by the Director as being in responsible charge of connections to the sewage collection system for the municipality. All approved plans and specifications must be signed by said designated professional engineer indicating approval to proceed with construction in accordance with the approved plans and specifications. No sewage collection system construction shall proceed until plans and specifications have been reviewed and approved in this manner.

F. *Listing of projects.* The Director must supply DEQ with one copy of all such approved plans and specifications together with a listing of all approved projects monthly, on or before the fifteenth of each month following approval by the plans and specifications for each project. The listing shall include the name, location and date of approval of each such project.

G. *Inspection.* The City Engineer shall inspect each approved project and shall prohibit commencement of any sewage collection systems construction or connection prior to approval of plans and specifications in accordance with this division.

H. *System operation.* The City shall operate its wastewater system in compliance with the applicable rules of DEQ.

I. *System capacity exception.* Should any proposed City sewer line extension bring a connected lift station, interceptor line or sewage treatment plant to its design capacity, the construction or connection of the proposed sewer line extension may still be allowed, to the extent approved by DEQ, under the following circumstances:

(1) the City must apply, in writing, to the DEQ for a variance allowing the specified construction to proceed within the area.

(2) the application must detail what the City will do to ensure that the construction or connection will not worsen problems or treatment capacity, flow or bypassing of sewage.

(3) the application must include timetables for correcting any stated problems, prior to the connection of any additional loadings or flows, as a result of the construction for which approval is sought.

(4) the application, if approved, will become a condition of any permit issued for such construction by the DEQ.

(5) approval of construction in an area at design capacity, which has not received such a variance from the DEQ, will result in revocation of the City's overall sewer line permit exemption status, as provided by the rules and regulations of DEQ.

SECTION 17A-191. SMALL SEWAGE TREATMENT SYSTEMS.

Small sewage treatment systems may be installed, without the necessity of obtaining a permit from the DEQ, under the following circumstances:

(1) small sewage treatment systems must be constructed in accordance with the requirements of the DEQ; and

(2) if a subsurface system or lagoon is to be installed: (a) a soil percolation test is required; (b) soil percolation tests must be performed by registered professional sanitarians, registered professional engineers or registered land surveyors and submitted to the DEQ at the State or local office; and (c) the soil percolation tests must follow the procedure set forth by the DEQ; and

(3) prior to backfilling a subsurface system or placing a lagoon into service, final inspection and approval by the DEQ is required.

SECTIONS 17A-192--17A-210. RESERVED.

ARTICLE VII.

INDUSTRIAL OR HARMFUL DISCHARGES

DIVISION 1. GENERALLY

SECTION 17A-211. PROHIBITED DISCHARGE STANDARDS.

A. No industrial user shall introduce or cause to be introduced into the POTW any pollutant or wastewater which causes pass-through or interference. These general prohibitions apply to all industrial users of the POTW whether or not they are subject to categorical pretreatment standards or any other National, State or local pretreatment standards or requirements. Furthermore, no industrial user may contribute the following substances to the POTW:

(1) pollutants which create a fire or explosive hazard in the municipal wastewater collection and POTW, including, but not limited to, waste streams with a closed-cup flashpoint of less than 140 degrees (60 degrees Celsius) using the test methods specified in 40 CFR 261.21, as amended.

(2) any wastewater having a pH less than 5.0 or more than 10.5, or otherwise causing corrosive structural damage to the POTW or equipment, or endangering City personnel.

(3) solid or viscous substances in amounts which will cause obstruction of the flow in the POTW resulting in interference, but in no case solids greater than 1/2 inch in any dimension.

(4) any wastewater containing pollutants, including oxygen-demanding pollutants (BOD, etc.), released in a discharge at a flow rate and/or pollutant concentration which, either singly or by interaction with other pollutants, will cause interference with either the POTW, or any wastewater treatment or sludge process, or which will constitute a hazard to humans or animals.

(5) any wastewater having a temperature greater than 104 degrees Fahrenheit (40 degrees Celsius), or which will inhibit biological activity in the treatment plant resulting in interference, but in no case wastewater which causes the temperature at the introduction into the treatment plant to exceed 104 degrees (40 degrees Celsius).

(6) any discharge of nonpolar or saturated oil, nonbiodegradable cutting oil, or products of mineral oil origin which is greater than 100 mg/l or in amounts that will cause interference or pass-through.

(7) any pollutants which result in the presence of toxic gases, vapors or fumes within the POTW in a quantity that may cause acute worker health and safety problems.

(8) any trucked or hauled pollutants, except at discharge points designated by the City in accordance with 40 CFR 403.5(b)(8).

(9) any wastewater containing toxic pollutants in sufficient quantity, either singly or by interaction with other substances, to injure or interfere with any wastewater treatment process or to create a toxic effect in the receiving waters of the municipal wastewater collection and/or treatment system.

(10) any noxious or malodorous liquids, gases, solids or other wastewater which, either singly or by interaction with other wastes, are sufficient to create a public nuisance, a hazard to life, or to prevent entry into the sewers for maintenance and repair.

(11) any wastewater which imparts color which cannot be removed by the treatment process such as, but not limited to, dye wastes and vegetable tanning solutions.

(12) any wastewater containing any radioactive wastes or isotopes except as specifically approved by the Director, in compliance with applicable State or Federal regulations.

(13) stormwater, surface water, groundwater, artesian well water, roof runoff, subsurface drainage, condensate, deionized water, noncontact cooling water, and unpolluted industrial wastewater, unless specifically authorized by the Director, or as defined in 17A-1(W.1).

(14) any sludges, screenings, or other residues from the pretreatment of industrial wastes.

(15) any medical wastes, except as specifically authorized by the Director in a wastewater discharge permit.

(16) any wastewater causing the treatment plant's effluent to fail a toxicity test.

(17) any wastes containing detergents, surface-active agents, or other substances which may cause excessive foaming in the POTW.

(18) any discharge of polar or nonsaturated fats, oils or greases which is greater than 200 mg/l, or in amounts that will cause interference or obstruction of the POTW.

(19) any substance which causes a hazard to human life or creates a public nuisance.

(20) any garbage from categorical or non-categorical users that has not been properly shredded. The installation and operation of any garbage grinder or garbage disposal equipped with a motor of three-fourths horsepower or greater shall be subject to review and approval of the Director.

B. At no time shall two readings on an explosion hazard meter at any point of discharge into the POTW, or at any point in the POTW, be more than five percent nor any single reading over ten percent of the lower explosive limit (LEL) of the meter.

C. When the Director determines that a user is contributing to the municipal wastewater collection and treatment system any of the above enumerated substances in such amounts as to interfere with the operation of the municipal wastewater collection and treatment system, the Director shall:

(1) advise the user of the impact of the contribution on the municipal wastewater collection and treatment system; and

(2) inform said user that the user has two days to correct the interference with the municipal wastewater collection and treatment system.

D. Wastes prohibited by this article shall not be processed or stored in such a manner that the wastes could be discharged to the POTW. All floor drains located in process or materials storage areas must discharge to the industrial user's pretreatment facility before connecting with the POTW or have spill control measures approved by the Director installed and operational.

SECTION 17A-212. FEDERAL CATEGORICAL PRETREATMENT STANDARDS.

The national categorical pretreatment standards found at 40 CFR, Chapter I, Subchapter N, Parts 405 through 17A1, and all amendments thereto, are hereby incorporated.

SECTION 17A-213. STATE REQUIREMENTS.

Local, State, or Federal requirements and limitations on discharges shall apply in any case where they are more stringent than requirements and limitations in this chapter. The City shall notify all affected users of any change in the above-described requirements or limitations, including the promulgation and/or date of effectiveness of national categorical pretreatment standards.

SECTION 17A-214. SPECIFIC POLLUTANT AND IMPURITIES LIMITATIONS AND SPECIAL CONDITIONS.

A. *Limits.* The following pollutant limits are established to protect against pass-through and interference. No person shall discharge wastewater containing in excess of the following maximum allowable discharge limits:

TABLE INSET:

Monthly Average mg/L	Peak Day mg/L	
0.35	0.70	mg/l arsenic
0.07	0.14	mg/l cadmium
1.95	3.90	mg/l chromium
1.66	3.32	mg/l copper
0.21	0.42	mg/l cyanide
1.05	2.10	mg/l lead
0.02	0.04	mg/l mercury
0.79	1.58	mg/l molybdenum
3.98	7.96	mg/l nickel
0.06	0.12	mg/l selenium
1.91	3.82	mg/l silver
2.17	4.34	mg/l zinc
	*	mg/l BOD
	*	mg/l suspended solids
	100	mg/l saturated or nonpolar oil and grease
	200	mg/l nonsaturated or polar oil and grease

*The Director shall set limits for biochemical oxygen demand (BOD) and suspended solids (TSS).

B. *Concentrations.* Concentrations apply at the point where the industrial waste is discharged to the POTW. All concentrations for metallic substances are for "total" metal unless indicated otherwise. At his discretion, the Director may impose mass limitations in addition to or in place of the concentration based limitations above.

C. *Organic pollutants.* At the discretion of the Director, the City may establish organic pollutant discharge limits for industrial users. Industrial users identified for organic pollutant discharge limits may be required to submit an organic compounds control plan containing such information as required by the Director.

The explosivity and worker health and safety limit will be considered along with other environmental criteria such as allowable headworks loading and/or maximum allowable headworks loading for a specific POTW in the establishment of organic pollutant discharge limits for industrial users. Worker health and safety criteria is established pursuant to the O.S.H.A. or N.I.O.S.H. standards.

D. *Additional limitations and conditions for extrajurisdictional users.*

(1) *Permit limits and special conditions.* The permit limits and special conditions to be imposed in the pretreatment permit will be issued at the discretion of the Director after reviewing the permit application. The Director reserves the right to reject a permit application and deny connection to the Piedmont sewer system based on the type of discharge; information in the permit application; protection of City facilities; and the ability of City facilities to maintain compliance with environmental requirements. The permittee shall be subject to all provisions of the City sewer use ordinances and policies of the Piedmont industrial pretreatment program. The Director reserves the right to terminate services to any user outside City limits when in his/her opinion the discharge from facilities outside the City limits begins to adversely impact either City facilities or permit compliance. The Director reserves the right to reopen any permit to a user outside the City limits at any time due to impacts to City Facilities or changes in environmental requirements.

(2) *Maximum wastewater impurity concentration limits.*

TABLE INSET:

Maximum TDS Concentration =	6,000 mg/L
Maximum Chloride Concentration =	1,000 mg/L
Maximum Sulfate Concentration =	1,000 mg/L

E. Special conditions for City users and extrajurisdictional users.

(1) permittee shall be responsible for any damage to City facilities caused by or contributed to by the discharge of pollutants or impurities from permittee's facility. In order to minimize damage to City's facilities, the permittee may be required through surcharges or permit fees to pay for modifications to City facilities to minimize the impact of TDS, chlorides, and sulfates. These impacts may include, but not limited to include the design of a diffuser for rapid mixing of high

TDS wastewater into the City's wastewater treatment and collection facilities, which will minimize damage from corrosion and the primary clarifier from density interference with the removal of BOD and TSS.

(2) in accordance with the City's discharge control policy, the permittee is being informed that at some time in the future additional pretreatment may be required to control the discharge of TDS, chloride, and sulfate from permittee's facility. These revised permit requirements will contain a compliance schedule with milestones for design and installation of pretreatment facilities.

(3) permittee shall provide, in its permit application, estimates of water requirements and wastewater based on operational controls at its facility. Permit limits have been developed for the permittee as not exceed concentration limits and monthly average mass limits. These not to exceed limits will allow the permittee flexibility in the design and operation of its facility within these limits. The permittee must be in compliance with discharge limits at all times. If the permittee must be in compliance with discharge limits at all times. If the permittee desires to change discharge flow and/or strength above its established permit limits, a new permit application shall be submitted to the City for review and approval prior to any changes.

(4) the City is under no obligation to grant approval of a revised permit that increases flow or strength. The City reserves the right to make any individual permit limits or discharge standards more restrictive. The City reserves the right to establish discharge standards and permit limits that are more restrictive for outside City users than for inside City users. The City reserves the right to make any individual permit limits or discharge standards more restrictive in order to meet any changes or modifications to State or Federal law or as it may determine to be in the best interest of The City of Piedmont and its users.

SECTION 17A-215. CITY'S RIGHT OF REVISION.

The City reserves the right to establish by ordinance or in wastewater discharge permits more stringent standards or requirements on discharges to the POTW if deemed necessary to comply with the objectives presented in this chapter or the general and specific prohibitions in this chapter.

SECTION 17A-216. SPECIAL AGREEMENTS.

A. The City reserves the right to enter into special agreements with industrial users setting out special terms under which they may discharge to the POTW. In no case will a special agreement waive compliance with a pretreatment standard or requirement. However, the industrial user may request a net gross adjustment to a categorical standard in accordance with 40 CFR 403.15, as amended. The industrial user may also request a variance from the categorical pretreatment standard from the EPA. Such a request will be approved only if the industrial user can prove that factors relating to its discharge are fundamentally different from the factors considered by the EPA when establishing that pretreatment standard. An industrial user requesting a fundamentally different factor variance must comply with the procedural and substantive provisions in 40 CFR 403.13, as amended.

B. If any waters or wastes are discharged, or are proposed to be discharged to the public sewers, that contain the substances or possess the characteristics enumerated in this chapter and that in the judgment of the Director may have a deleterious effect upon the wastewater works, processes, equipment, or receiving waters, or that otherwise create a hazard to life or constitute a health hazard or public nuisance, the Director may:

(1) reject the wastes;

(2) require pretreatment to an acceptable condition for discharge to the public sewers;

(3) require control over the quantities and rates of discharge; and/or

(4) require a variance agreement to treat such wastes; said agreement shall remain in effect for a period of one year and shall be renewable at the discretion of the Director. Payment to cover the cost of handling and treating the wastes shall be under the provision of Chapter 60 the General Schedule of Fees.

If the Director permits the pretreatment or equalization of waste flows, the design and installation of the plant and equipment shall be subject to the review and approval of the Director and subject to the requirements of all applicable codes, ordinances, and laws.

SECTION 17A-217. DILUTION.

No industrial user shall ever increase the use of process water, or in any way attempt to dilute a discharge, as a partial or complete substitute for adequate treatment to achieve compliance with a discharge limitation unless expressly authorized by an applicable pretreatment standard or requirement. The Director may impose mass limitations on industrial users which are using dilution to meet applicable pretreatment standards or requirements, or in other cases when the imposition of mass limitations is appropriate.

SECTION 17A-218. WAIVERS AND VARIANCES.

A. An Industrial User may submit to the Director of the Utility a written request for a waiver or variance of specific pollutant limitations. All requests will be evaluated by the Director and, on a case-by-case basis, a determination will be made within 60 days of receipt of the request. All limits shall be met until the Industrial User receives written approval from the Director granting the request. The Director may deny any request for a waiver. The following conditions shall apply to all waivers granted:

(1) waiver of applicable Federal Categorical Pretreatment Standards or the pollutants outlined in Paragraph 17A-214 (a) is prohibited.

(2) capacity at the Wastewater Treatment Facility must be available for the requested pollutant(s).

(3) the duration of the waiver will be specified and shall in no event exceed five years. Application for renewal of the waiver must be made at least 60 days before expiration.

(4) any violation of the Industrial Waste Discharge Permit or Special Use Authorization conditions may result in the immediate revocation of the waiver.

(5) the waiver will be issued to a specific user for a specific operation. A waiver shall not be reassigned, transferred, or sold to a new owner, new user, different premises, or a new or changed operation without the approval of the Director.

(6) notwithstanding the language in any individual permit or any individual waiver, all permit waivers are subject to revocation or modification by the Director subsequent to any periodic review of the technically based local limits.

(7) the Industrial User will bear the cost of any testing or evaluation deemed necessary by the Director in evaluating any waiver or the impact of any waiver or class of waivers upon the POTW.

B. Upon the request of any permitted commercial laundry, the Director may grant a variance in the discharge requirements to permit discharge up to a pH of 11.0. Notwithstanding the language in any individual permit or any individual variance, all permit variances are subject to revocation or modification by the Director subsequent to any period review of the technically based local limits.

SECTION 17A-219--17A-240. RESERVED.

DIVISION 2. PRETREATMENT OF WASTEWATER

SECTION 17A-241. PRETREATMENT FACILITIES.

A. Industrial users shall provide necessary wastewater treatment as required to comply with this chapter and shall achieve compliance with all categorical pretreatment standards, local limits, and the prohibitions set out in 17A-211 and Federal categorical pretreatment standards within the time limitations as specified in this chapter and by the Federal pretreatment regulations. Any facilities required to pretreat wastewater to a level acceptable to the City shall be provided, operated, and maintained at the user's expense. Detailed plans showing the pretreatment facilities and operating procedures shall be submitted to the City for review, and shall be acceptable to the City before construction of the facility. The review of such plans and operating procedures will in no way relieve the user from the responsibility of modifying the facility as necessary to produce an effluent acceptable to the City under the provisions of this article.

Any subsequent changes in the pretreatment facilities or method of operation shall be reported to and be acceptable to the City prior to the user's initiation of the changes.

B. All records relating to compliance with pretreatment standards shall be made available to officials of the Environmental Protection Agency or approval authority upon request.

SECTION17A-242. ADDITIONAL PRETREATMENT MEASURES.

A. Whenever deemed necessary, the director may require industrial users to restrict their discharge peak flow periods, designate that certain wastewater be discharged only into specific sewers, relocate and/or consolidate points of discharge, separate sewage waste streams from industrial waste streams, and other conditions as may be necessary to protect the POTW and determine the industrial user's compliance with the requirements of this article.

B. Grease, oil and sand interceptors shall be provided by the user when, in the opinion of the director, the interceptors are necessary for the proper handling of wastewater containing excessive amounts of grease and oil, or sand; except that such interceptors shall not be required for residential users. All interceptor units shall be of type and capacity approved by the director and shall be so located to be easily accessible for cleaning and inspection. Interceptors may be periodically inspected by the director. The interceptors shall be cleaned and repaired regularly, and as otherwise needed, by the user at the owner's expense.

SECTION 17A-243. ACCIDENTAL DISCHARGE/SLUG CONTROL PLANS.

A. Each user shall provide facilities which the City deems adequate to protect the municipal wastewater collection and treatment system from accidental discharge of prohibited materials or other substances regulated by this chapter. Facilities to prevent accidental discharge of prohibited materials shall be provided and maintained at the owner's or user's own cost and expense. Detailed plans showing facilities and operating procedures to provide this protection shall be submitted to the City for review, and shall be approved by the City before construction of the facility. All existing users shall complete such within 90 days of the initial approval of this chapter by the Environmental Protection Agency. No user who commences contribution to the municipal wastewater collection and treatment system after the initial approval of this article by the Environmental Protection Agency shall be permitted to introduce substances into the system until accidental discharge procedures have been approved by the City. Review and approval of such plans and operating procedures shall not relieve the industrial user from the responsibility to modify the user's facility as necessary to meet the requirements of this article. In the case of an accidental discharge, it is the responsibility of the user to immediately telephone and notify the Director or his designated representative of the incident. The notification shall include date, time, and location of discharge, type of waste, concentration and volume, and corrective actions.

B. Written notice. Within five days following an accidental discharge, the user shall submit to the Director a detailed written report describing the cause of the discharge and the measures to be taken by the user to prevent similar future occurrences. Such notification shall not relieve the user of any expense, loss, damage, or other liability which may be incurred as a result of damage to the municipal wastewater collection and treatment system, fish kills, or any other damage to person or property; nor shall such notification relieve the user of any fines, civil penalties or other liability which may be imposed by this chapter or other applicable law.

C. Notice to employees. A notice shall be permanently posted on the user's bulletin board or other prominent and accessible place advising employees whom to call in the event of a dangerous

discharge. Employers shall ensure that all employees who may cause or suffer such a dangerous discharge to occur are advised of the emergency notification procedure.

SECTION17A-244. TENANT RESPONSIBILITY.

Where an owner of property leases premises to any other person as a tenant under any rental or lease agreement, if either the owner or the tenant is an industrial user, either or both may be held responsible for compliance with the provisions of this chapter.

SECTION 17A-245. HAULED WASTEWATER.

A. Septic tank waste may be accepted into the POTW at a designated receiving structure within the treatment plant area, and at such times as are established by the Director, provided such wastes do not violate the provisions of this chapter or any other requirements established or adopted by the City. Wastewater discharge permits for individual vehicles to use such facilities shall be issued by the Director.

B. The discharge of hauled industrial wastes as "industrial septage" requires prior approval and a wastewater discharge permit from the City. The Director shall have authority to prohibit the disposal of such wastes, if such disposal would interfere with the treatment plant operation. Waste haulers are subject to all other sections of this chapter.

C. Fees for dumping septage will be established as part of the industrial user fee system as established in Chapter 60, the General Schedule of Fees.

SECTION 17A-246. VANDALISM.

No person shall maliciously, willfully or negligently break, damage, destroy, uncover, deface, tamper with or prevent access to any structure, appurtenance or equipment, or other part of the POTW. Any person found in violation of this requirement shall be subject to the fines, imprisonment and sanctions set forth in this chapter.

SECTION 17A-217A--17A-270. RESERVED.

DIVISION 3. WASTEWATER DISCHARGE PERMIT ELIGIBILITY

SECTION 17A-271. **WASTEWATER SURVEY.**

When requested by the Director, all industrial users must submit information on the nature and characteristics of their wastewater by completing a wastewater survey prior to commencing their discharge. The Director is authorized to prepare a form for this purpose and may periodically require industrial users to update the survey. Failure to complete this survey shall be reasonable grounds for terminating service to the industrial user and shall be considered a violation of the provisions of this chapter.

SECTION 17A-272. WASTEWATER DISCHARGE PERMIT REQUIREMENT.

A. It shall be unlawful for any significant industrial user to discharge wastewater into the City's POTW without first obtaining a wastewater discharge permit from the Director. Any violation of the terms and conditions of a wastewater discharge permit shall be deemed a violation of this chapter and

subjects the wastewater discharge permittee to the fines, imprisonment and sanctions set forth herein. Obtaining a wastewater discharge permit does not relieve a permittee of its obligation to comply with all Federal, State and local pretreatment standards or requirements or with any other requirements of Federal, State and local law.

B. The Director may require other industrial users, including liquid waste haulers, to obtain wastewater discharge permits as necessary to carry out the purposes of this chapter.

SECTION 17A-273. WASTEWATER DISCHARGE PERMIT FOR EXISTING CONNECTIONS.

Any significant industrial user which discharges industrial waste into the POTW prior to October 1, 1992, and who wishes to continue such discharges in the future, shall, within 30 days after said date, apply to the City for a wastewater discharge permit in accordance with this article and shall not cause or allow discharges to the POTW to continue after 30 days of October 1, 1992, except in accordance with a wastewater discharge permit issued by the Director.

SECTION 17A-274. WASTEWATER DISCHARGE PERMIT FOR NEW CONNECTIONS.

Any significant industrial user proposing to begin or recommence discharging industrial wastes into the POTW must obtain a wastewater discharge permit prior to the beginning or recommencing of such discharge. An application for this wastewater discharge permit must be filed at least 45 days prior to the date upon which any discharge will begin.

SECTION 17A-275. WASTEWATER DISCHARGE PERMIT FOR EXTRAJURISDICTIONAL INDUSTRIAL USERS.

A. Any existing significant industrial user located beyond the City limits shall submit a wastewater discharge permit application, in accordance with this article, within 30 days of October 1, 1992. New significant industrial users located beyond the City limits shall submit such applications to the Director 90 days prior to any proposed discharge into the POTW.

B. Alternately, the Director may enter into an agreement with the neighboring jurisdiction in which the significant industrial user is located to provide for the implementation and enforcement of pretreatment program requirements against said industrial user.

SECTION 17A-276. WASTEWATER DISCHARGE PERMIT APPLICATION CONTENTS.

A. In order to be considered for a wastewater discharge permit, all industrial users required to have a wastewater discharge permit must submit the information required by Division 5 of this article. The Director shall approve a form to be used as a permit application. In addition, the following information may be requested:

(1) description of activities, facilities, and plant processes on the premises, including a list of all raw materials and chemicals used or stored at the facility which are, or could accidentally or intentionally be, discharged to the POTW.

(2) number and type of employees, hours of operation, and proposed or actual hours of operation of all facilities.

(3) each product produced by type, amount, process or processes, and rate of production.

(4) type and amount of raw materials processed (average and maximum per day).

(5) the site plans, floor plans, mechanical and plumbing plans, and details to show all sewers, floor drains, and appurtenances by size, location, and elevation, and all points of discharge.

(6) time and duration of the discharge.

(7) any other information as may be deemed necessary by the Director to evaluate the wastewater discharge permit application.

B. Incomplete or inaccurate applications will not be processed and will be returned to the industrial user for revision.

SECTION 17A-277. APPLICATION SIGNATORIES AND CERTIFICATION.

All wastewater discharge permit applications and industrial user reports must contain the following certification statement and be signed by an authorized representative of the industrial user: "I certify under penalty of law that this document and all attachments were prepared under my direction or supervision in accordance with a system designed to assure that qualified personnel properly gather and evaluate the information submitted. Based on my inquiry of the person or persons who manage the system, or those persons directly responsible for gathering the information, the information submitted is to the best of my knowledge and belief, true, accurate and complete. I am aware that there are significant penalties for submitting false information, including the possibility of fine and imprisonment for knowing violations."

SECTION 17A-278. WASTEWATER DISCHARGE PERMIT DECISIONS.

The Director will evaluate the data furnished by the industrial user and may require additional information. Within 45 days of receipt of a complete wastewater discharge permit application, the Director will determine whether to issue a wastewater discharge permit. If no determination is made within this time period, the application will be deemed denied. The Director may deny any application for a wastewater discharge permit.

SECTIONS 17A-279--17A-300. RESERVED.

DIVISION 4. WASTEWATER DISCHARGE PERMIT ISSUANCE PROCESS

SECTION 17A-301. WASTEWATER DISCHARGE PERMIT DURATION.

Wastewater discharge permits shall be issued for a specified time period, not to exceed five years. A permit may be issued for a period less than a year or may be stated to expire on a specific date, at the discretion of the Director. Each wastewater discharge permit will indicate a specific date upon which it will expire.

SECTION 17A-302. WASTEWATER DISCHARGE PERMIT CONTENT.

A. Wastewater discharge permits shall include such conditions as are reasonably deemed necessary by the Director to prevent pass-through or interference, protect the quality of the water body receiving the treatment plant's effluent, protect worker health and safety, facilitate sludge management and disposal, protect ambient air quality, and protect against damage to the POTW.

B. Wastewater discharge permits shall be expressly subject to all provisions of this chapter and all other applicable chapters, ordinances, user charges and fees established by the City. Wastewater discharge permits shall contain the following conditions:

(1) the unit charge or schedule of user charges and fees for the wastewater to be discharged to the POTW.

(2) limits on the average and maximum wastewater constituents and characteristics.

(3) limits on average and maximum rate and time of discharge or requirements for flow regulations and equalization.

(4) requirements for installation and maintenance of inspection and sampling facilities.

(5) specifications for monitoring programs which may include sampling locations, frequency of sampling, number, types and standards for tests and reporting schedule.

(6) compliance schedules.

(7) requirements for submission of technical reports or discharge reports.

(8) requirements for maintaining and retaining plant records relating to wastewater discharge as specified by the City, and affording City access thereto.

(9) requirements for notification to the City of any new introduction of wastewater constituents or any substantial change in the volume or character of the wastewater constituents being introduced into the municipal wastewater collection and treatment system.

(10) requirements for notification of slug discharges as provided in this chapter.

(11) upon changes or increases in discharge, as determined by the water and wastewater utilities Director, the Director may require the user to reapply or amend its permit.

(12) a notice that any permittee who is found to have violated an order of the Director, or who violated or failed to comply with any permit provision, any provisions of Chapter 17A of this Code, or the orders, rules, regulations and permits issued pursuant to Chapter 17A of the Code shall be guilty of an offense against the City and may be prosecuted in Municipal Court.

(13) other conditions as deemed appropriate by the Director or the City to ensure compliance with this chapter.

State law references: Penalty for ordinance violations, 11 O.S. § 14-111.

SECTION 17A-303. WASTEWATER DISCHARGE PERMIT APPEALS.

Any person, including the industrial users, may petition the Director, or his designated representative, to reconsider the terms of a wastewater discharge permit within 30 days of its issuance.

(1) failure to submit a timely petition for review shall be deemed to be a waiver of the administrative appeal.

(2) in its petition, the appealing party must indicate the wastewater discharge permit provisions objected to, the reasons for this objection and the alternative conditions, if any, it seeks to place in the wastewater discharge permit.

(3) the effectiveness of the wastewater discharge permit shall not be stayed pending the appeal.

(4) if the Director, or his designated representative, fails to act within 45 days, a request for reconsideration shall be deemed to be denied. Decisions not to reconsider a wastewater discharge permit, not to issue a wastewater discharge permit, or not to modify a wastewater discharge permit, shall be considered final administrative action for purposes of judicial review.

(5) aggrieved parties who have exhausted their administrative remedies may seek judicial review of the final administrative wastewater discharge permit decision by filing a complaint with the district court for Canadian County within appropriate State statute of limitations.

SECTION 17A-304. WASTEWATER DISCHARGE PERMIT MODIFICATION.

A. The Director may modify the wastewater discharge permit for good cause, including, but not limited to, the following:

(1) to incorporate any new or revised Federal, State or local pretreatment standards or requirements.

(2) to address significant alterations or additions to the industrial user's operation, processes, or wastewater volume or character since the time of wastewater discharge permit issuance.

(3) a change in the POTW that requires either a temporary or permanent reduction or elimination of the authorized discharge.

(4) information indicating that the permitted discharge poses a threat to the City's POTW, City personnel, or the receiving waters.

(5) violation of any terms or conditions of the wastewater discharge permit.

(6) misrepresentations or failure to fully disclose all relevant facts in the wastewater discharge permit application or in any required reporting.

(7) revision of or a grant of variance from categorical pretreatment standards pursuant to 40 CFR 403.13, as amended.

(8) to correct typographical or other errors in the wastewater discharge permit.

(9) to reflect a transfer of the facility ownership and/or operations to a new owner/operator.

B. The filing of a request by the permittee for a wastewater discharge permit modification does not stay any wastewater discharge permit condition.

SECTION 17A-305. WASTEWATER DISCHARGE PERMIT TRANSFER.

A. Wastewater discharge permits are issued to a specific user for a specific operation. A wastewater discharge permit shall not be reassigned or transferred or sold to a new owner, new user, different premises, or a new or changed operation without the approval of the director. Changes in operation or processing which result in a change in the permit conditions, limitations, or requirements will require a new permit, and the existing permit will not be reassigned. Any succeeding owner or user shall comply with the terms and conditions of the existing permit.

B. Wastewater discharge permits may be reassigned or transferred to a new owner and/or operator only if the permittee gives at least 30 days advance notice to the director, the permit premises have not changed, the processes and operations at the premises have not changed, and the director approves the wastewater discharge permit transfer. The notice to the director must include a written certification by the new owner and/or operator which:

(1) states that the new owner and/or operator have no immediate intent to change the facility's operations and processes.

(2) identifies the specific date on which the transfer is to occur.

(3) acknowledges full responsibility for complying with the existing wastewater discharge permit.

C. Failure to provide advance notice of a transfer renders the wastewater discharge permit voidable on the date of the facility transfer.

SECTION 17A-306. WASTEWATER DISCHARGE PERMIT REVOCATION.

(a) Wastewater discharge permits may be revoked for the following reasons:

(1) failure to notify the City of significant changes to the wastewater character prior to discharge.

(2) failure to provide prior notification to the City of changed condition pursuant to Division 5 of this article.

(3) misrepresentation or failure to fully disclose all relevant facts in the wastewater discharge permit application.

(4) falsifying self-monitoring equipment.

(5) tampering with monitoring equipment.

(6) refusing to allow the City timely access to the facility premises and records.

(7) failure to meet effluent limitations.

(8) failure to pay fines.

(9) failure to pay sewer charges.

(10) failure to meet compliance schedules.

(11) failure to complete a wastewater survey or the wastewater discharge permit application.

(12) failure to provide advance notice of the transfer of a permitted facility.

(13) violation of any pretreatment standard or requirement, or any terms of the wastewater discharge permit or the provisions of this chapter.

B. Wastewater discharge permits shall be voidable upon non-use, cessation of operations, or transfer of business ownership without prior approval of the Director of a permit transfer. All wastewater discharge permits are void upon the issuance of a new wastewater discharge permit.

SECTION 17A-307. WASTEWATER DISCHARGE PERMIT REISSUANCE.

A significant industrial user shall apply for wastewater discharge permit reissuance a minimum of 30 days prior to the expiration of the industrial user's existing permit.

SECTION 17A-308. WASTEWATER DISCHARGE PERMIT NOTIFICATION.

The terms and conditions of the wastewater discharge permit may be subject to modification by the Director during the term of the permit as limitations or requirements as identified in this chapter are modified or if other just cause exists. The industrial user shall be informed by certified mail of any proposed changes in his permit at least 30 days prior to the effective date of change. Any changes or new conditions in the permit shall include a reasonable time schedule for compliance. Upon determination by the Director that a user's contribution to the POTW has changed or increased, the Director may require the user to reapply for a permit or amend the user's existing permit.

SECTION 17A-309. POTENTIAL TO DISCHARGE PERMIT REQUIRED.

All categorical and noncategorical users who claim no process discharge, total recycling of categorical and/or noncategorical waste or the separate disposal of all categorical and/or noncategorical wastes are hereby required to obtain a permit for potential to discharge. Provided however, that should the Director determine that the categorical or noncategorical user is discharging categorical or noncategorical waste into the POTW then the potential to discharge permit shall be revoked and the user shall be required to obtain the appropriate permit and meet the applicable requirements of this chapter. A fee for a potential to discharge permit for users with is set forth the General Schedule of Fees.
§§ 17A-310--17A-330. Reserved.

DIVISION 5. REPORTING REQUIREMENTS

SECTION 17A-331. BASELINE MONITORING REPORTS.

A. Within either 180 days after the effective date of a categorical pretreatment standard, or the final administrative decision on a category determination under 40 CFR 403.6(a)(4), as amended, whichever is later, existing significant industrial users subject to such categorical pretreatment standards, and currently discharging to or scheduled to discharge to the POTW, shall be required to submit to the City a report which contains the information listed in this division. At least 45 days prior to commencement of their discharge, new sources, and sources that become industrial users subsequent to the promulgation of an applicable categorical standard, shall be required to submit to the City a report which contains the information listed in this division. A new source shall also be required to report the method of pretreatment it intends to use to meet applicable pretreatment standards. A new source shall also give estimates of its anticipated flow and quantity of pollutants discharged.

B. The industrial user shall submit the information required by this section, including:

(1) *Identifying information.* The name and address of the facility, including the name of the operator and owners.

(2) *Wastewater discharge permits.* A list of any environmental control wastewater discharge permits held by or for the facility.

(3) *Description of operations.* A brief description of the nature, average rate of production, and standard industrial classifications of the operation(s) carried out by such industrial user. This description should include a schematic process diagram which indicates points of discharge to the POTW from the regulated processes.

(4) *Flow measurement.* Information showing the measured average daily and maximum daily flow, in gallons per day, to the POTW from regulated process streams and other streams, as necessary, to allow use of the combined waste stream formula set out in 40 CFR 403.6(e), as amended.

(5) *Measurement of pollutants.*

a. identify the categorical pretreatment standards applicable to each regulated process.

b. submit the results of sampling and analysis identifying the nature and concentration (and/or mass, where required by the standard or by the City) of regulated pollutants in the discharge from each regulated process. Instantaneous, daily maximum and long-term average concentrations (or mass, where required) shall be reported. The sample shall be representative of daily operations and shall be analyzed in accordance with procedures set out in this division.

c. sampling must be performed in accordance with procedures set out in this division.

(6) *Certification.* A statement reviewed by the industrial user's authorized representative and certified by a qualified professional, indicating whether pretreatment standards are being met on a consistent basis and, if not, whether additional operation and maintenance (O&M) and/or additional pretreatment is required to meet the pretreatment standards and requirements.

(7) *Compliance schedule.* If additional pretreatment and/or O&M will be required to meet the pretreatment standards, the shortest schedule by which the industrial user will provide such additional pretreatment and/or O&M. The completion date in this schedule shall not be later than the compliance date established for the applicable pretreatment standard. A compliance schedule pursuant to this section must meet the requirements set out in 40 CFR 403.12(B)(7) and (C), as amended.

(8) *Baseline monitoring reports.* All baseline monitoring reports must be signed and certified in accordance with Division 3 of this article.

SECTION 17A-332. COMPLIANCE SCHEDULE PROGRESS REPORT.

The following conditions shall apply to the schedule required by the above section. The schedule shall contain progress increments in the form of dates for the commencement and completion of major events leading to the construction and operation of additional pretreatment required for the user to meet the applicable pretreatment standards (such events include hiring an engineer, completing preliminary and final plans, executing contracts for major components, commencing and completing construction, beginning and conducting routine operation). No increment referred to above shall exceed nine months. The industrial user shall submit a progress report to the Director no later than 14 days following each date in the schedule and the final date of compliance including, as a minimum, whether or not it complied with the increment of progress, the reason for any delay (and, if appropriate) the steps being taken by the industrial user to return to the established schedule. In no event shall more than nine months elapse between such progress reports to the Director.

SECTION 17A-333. REPORT ON COMPLIANCE WITH CATEGORICAL PRETREATMENT STANDARD DEADLINE.

Within 90 days following the date for final compliance with applicable categorical pretreatment standards, or in the case of a new source following commencement of the introduction of wastewater into the POTW, any industrial user, subject to such pretreatment standards and requirements, shall submit to the City a report containing the information required for the baseline monitoring report. For industrial users subject to equivalent mass or concentration limits established in accordance with the procedures in 40 CFR 403.6(c), as amended, this report shall contain a reasonable measure of the industrial user's longterm production rate. For all other industrial users subject to categorical pretreatment standards expressed in terms of allowable pollutant discharge per unit of production (or other measure of operation), this report shall include the industrial user's actual production during the appropriate sampling period. All compliance reports must be signed and certified in accordance with EPA signatory requirements for industrial users.

SECTION 17A-334. PERIODIC COMPLIANCE REPORTS.

A. Any categorical industrial user subject to a pretreatment standard shall, at a frequency determined by the Director, but in no case less than twice per year (in June and December), submit a report indicating the nature and concentration of pollutants in the discharge which are limited by such pretreatment standards and the measured or estimated average and maximum daily flows for the reporting period. All periodic compliance reports must be signed and certified in accordance with EPA signatory requirements for industrial users.

B. All wastewater samples must be representative of the industrial user's discharge. Wastewater monitoring and flow measurement facilities shall be properly operated, kept clean, and maintained in good working order at all times. The failure of an industrial user to keep its monitoring facility in good working order shall not be grounds for the industrial user to claim that sample results are unrepresentative of its discharge.

C. If an industrial user subject to the reporting requirement in this article monitors any pollutant more frequently than required by the City, using the procedures prescribed in 40 CFR 403.12(g)(5), as amended, the results of this monitoring shall be included in the report.

SECTION 17A-335. REPORT OF CHANGED CONDITIONS.

Each industrial user shall notify the Director promptly of any planned significant changes to the industrial user's operations or system which might alter the nature, quality or volume of its wastewater at least 30 days before the change.

(1) the Director may require the industrial user to submit such information as may be deemed necessary to evaluate the changed condition, including the submission of a wastewater discharge permit application.

(2) the Director may issue a wastewater discharge permit or modify an existing wastewater discharge permit.

(3) no industrial user shall implement the planned changed condition(s) until and unless the Director has responded to the industrial user's notice in writing.

(4) for purposes of this requirement, flow increases of ten percent or greater, and the discharge of any previously unreported pollutants, shall be deemed significant.

SECTION 17A-336. REPORTS OF POTENTIAL PROBLEMS.

A. In the case of any discharge including, but not limited to, accidental discharges, discharges of a non-routine, episodic nature, a non-customary batch discharge, or a slug load which may cause potential problems for the POTW (including a violation of the prohibited discharge standards in this chapter), it is the responsibility of the industrial user to immediately telephone and notify the City of the incident. This notification shall include the location of discharge, type of waste, concentration and volume, if known, and corrective actions taken by the industrial user.

B. Within five days following such discharge, the industrial user shall submit a detailed written report describing the cause(s) of the discharge and the measures to be taken by the industrial user to prevent similar future occurrences. Such notification shall not relieve the industrial user of any expense, loss, damage or other liability which may be incurred as a result of damage to the POTW, natural resources, or any other damage to person or property; nor shall such notification relieve the industrial user of any fines, civil penalties, or other liability which may be imposed by this chapter.

C. Failure to notify the City of potential problem discharges shall be deemed a separate violation of this chapter.

D. A notice shall be permanently posted on the industrial user's bulletin board or other prominent place advising employees whom to call in the event of a discharge described in Paragraph (a) above.

Employers shall ensure that all employees, who may cause or suffer such a discharge to occur, are advised of the emergency notification procedure.

SECTION 17A-337. REPORTS FROM SIGNIFICANT NON-CATEGORICAL USERS AND NONSIGNIFICANT INDUSTRIAL USERS.

A. The control authority shall require appropriate reporting from those industrial users with discharges that are not subject to categorical pretreatment standards. Significant non-categorical industrial users shall submit to the control authority at least once every six months (on dates specified by the control authority) a description of the nature, concentration, and flow of the pollutants required to be reported by the control authority. These reports shall be based on sampling and analysis performed in the period covered by the report, and performed in accordance with the techniques described in 40 CFR 136, and amendments thereto. Where 40 CFR 136, does not contain sampling or analytical techniques for the pollutant in question, or where the Administrator determines that the Part 136 sampling and analytical techniques are inappropriate for the pollutant in question, sampling and analysis shall be performed by using validated analytical methods or any other applicable sampling and analytical procedures, including procedures suggested by the City or other persons, approved by the Administrator. This sampling and analysis may be performed by the control authority in lieu of the significant non-categorical industrial user. Where the City itself collects all the information required for the report, the non-categorical significant industrial user will not be required to submit the report.

B. All industrial users not subject to categorical pretreatment standards and not required to obtain a wastewater discharge permit shall provide appropriate reports to the City as the Director may require.

SECTION 17A-338. NOTICE OF VIOLATION/REPEAT SAMPLING AND REPORTING.

If sampling performed by an industrial user indicates a violation, the industrial user must notify the City within 24 hours of becoming aware of the violation. The industrial user shall also repeat the sampling and analysis and submit the results of the repeat analysis to the control authority within 30 days after becoming aware of the violation. The industrial user is not required to resample if the City performs monitoring at the industrial user's site at least once a month, or if the City performs sampling between the industrial user's initial sampling and when the industrial user receives the results of this sampling.

SECTION 17A-339. NOTIFICATION OF DISCHARGE OF HAZARDOUS WASTE.

A. Any industrial user who commences the discharge of hazardous waste shall notify the City, the EPA Regional Waste Management Division Director and state hazardous waste authorities (ODEQ) in writing of any discharge into the POTW of a substance which, if otherwise disposed of, would be a hazardous waste under 40 CFR 261, as amended. Such notification must include the name of the hazardous waste as set forth in 40 CFR 261, as amended, the EPA hazardous waste number, and the type of discharge (continuous, batch or other). If the industrial user discharges more than ten kilograms of such waste per calendar month to the City, the notification shall also contain the following information to the extent such information is known and readily available to the industrial user: an identification of the hazardous constituents contained in the wastes, an estimation of the mass and concentration of such constituents in the waste stream discharged during that calendar month, and an estimation of the mass of constituents in the waste stream expected to be discharged during the following 12 months. All notifications must take place no later than 180 days after the discharge commences. Any notification under this paragraph need be submitted only once for each hazardous waste discharged. However, notifications of changed discharges must be submitted to the Director. The notification requirement in this

section does not apply to pollutants already reported under the self-monitoring requirements of this chapter.

B. Dischargers are exempt from the requirements of this article during a calendar month in which they discharge no more than 15 kilograms of hazardous wastes, unless the wastes are acute hazardous wastes as specified in 40 CFR 261.30(d) and 261.33(e), as amended. Discharge of more than 15 kilograms of non-acute hazardous wastes in a calendar month, or of any quantity of acute hazardous wastes as specified in 40 CFR 261.30(d) and 261.33(e), requires a one-time notification.

Subsequent months during which the industrial user discharges more than such quantities of any hazardous waste do not require additional notification.

C. In the case of any new regulations under § 3001 of RCRA identifying additional characteristics of hazardous waste or listing any additional substance as a hazardous waste, the industrial user must notify the City, the EPA Regional Waste Management Waste Division Director and state hazardous waste authorities of the discharge of such substance within 90 days of the effective date of such regulations.

D. In the case of any notification made under this section, the industrial user shall certify that it has a program in place to reduce the volume and toxicity of hazardous wastes generated to the degree it has determined to be economically practical.

SECTION 17A-340. ANALYTICAL REQUIREMENTS.

All pollutant analyses, including sampling techniques, to be submitted as part of a wastewater discharge permit application or report, shall be performed in accordance with the techniques prescribed in 40 CFR 136, as amended, unless otherwise specified in an applicable categorical pretreatment standard. If 40 CFR 136, as amended, does not contain sampling or analytical techniques for the pollutant in question, sampling and analyses must be performed in accordance with procedures approved by the EPA.

SECTION 17A-341. SAMPLE COLLECTION.

A. Except in Subsection (b) below, where flow is sufficient, wastewater compliance samples shall be a composite sample of at least four (4) grab samples of equal proportion taken at equal time intervals during a users normal production day. The Director may use production records and flow data to establish a users normal production day, and may require grab samples to be taken at greater intervals to prepare a composite sample. An instantaneous grab sample shall be used to determine compliance on batch or intermittent discharge. The monthly average limit shall apply to batch or intermittent discharge in determining user compliance.

B. Samples for oil and grease, temperature, pH, cyanide, phenols, toxicity, sulfides and volatile organic chemicals must be obtained using grab collection techniques.

SECTION 17A-342. DETERMINATION OF NONCOMPLIANCE BY USE OF GRAB SAMPLE.

The Director may use a grab sample(s) to determine noncompliance with pretreatment standards.

SECTION 17A-343. DATE OF SUBMITTAL.

For purposes of this division, written reports will be deemed to have been submitted on the date postmarked. For reports which are not mailed, postage prepaid, into a mail facility serviced by the U.S. postal service, the date of receipt of the report shall govern.

SECTION 17A-344. RECORDKEEPING.

A. Industrial users shall retain and make available for inspection and copying all records and information required to be retained under this chapter. These records shall remain available for a period of at least three years. This period shall be automatically extended for the duration of any litigation concerning compliance with this article, or where the industrial user has been specifically notified of a longer retention period by the Director.

B. Provision governing fraud and false statements. The reports and other documents required to be submitted or maintained under this chapter shall be subject to:

(1) the provisions of 18 USC 1001, as amended, relating to fraud and false statements;

(2) the provisions of § 309(c)(4) of the Act, as amended, governing false statements, representation or certification; and

(3) the provisions of § 309(c)(6) of the Act, as amended, regarding responsible corporate officers.

SECTIONS 17A-345--17A-370. RESERVED.

DIVISION 6. COMPLIANCE MONITORING

SECTION 17A-371. INSPECTION AND SAMPLING.

The City shall have the right to enter the facilities of any industrial user to ascertain whether the purpose of this article, and any permit or order issued hereunder, is being met and whether the industrial user is complying with all requirements thereof. Industrial users shall allow the Director or his representatives ready access to all parts of the premises for the purposes of inspection, sampling, records examination and copying, and the performance of any additional duties.

(1) where an industrial user has security measures in force which require proper identification and clearance before entry into its premises, the industrial user shall make necessary arrangements with its security guards so that, upon presentation of suitable identification, personnel from the City, State and EPA will be permitted to enter without delay for the purposes of performing their specific responsibilities.

(2) the City, State and EPA shall have the right to set up on the industrial user's property, or require installation of, such devices as are necessary to conduct sampling and/or metering of the user's operations.

(3) the City may require the industrial user to install monitoring equipment as necessary. The facility's sampling and monitoring equipment shall be maintained at all times in a safe and proper operating condition by the industrial user at its own expense. All devices used to measure wastewater flow and quality shall be calibrated periodically to ensure their accuracy.

(4) any temporary or permanent obstruction to safe and easy access to the industrial facility to be inspected and/or sampled shall be promptly removed by the industrial user at the written or verbal request of the Director and shall not be replaced. The costs of clearing such access shall be borne by the industrial user.

(5) unreasonable delays in allowing City personnel access to the industrial user's premises shall be a violation of this chapter.

SECTION 17A-372. SEARCH WARRANTS.

If the Director has been refused access to a building, structure or property, or any part thereof, and if the Director has demonstrated probable cause to believe that there may be a violation of this chapter or that there is a need to inspect as part of a routine inspection program of the City designed to verify compliance with this chapter or any permit or order issued hereunder, or to protect the overall public health, safety and welfare of the community, then upon application by the Municipal Counselor, the Municipal Court Judge of the City shall issue a search and/or seizure warrant describing therein the specific location subject to the warrant. The warrant shall specify what, if anything, may be searched and/or seized on the property described. Such warrant shall be served at reasonable hours by the Director in the company of a uniformed police officer of the City. In the event of an emergency affecting public health and safety, inspections shall be made without the issuance of a warrant.

SECTIONS 17A-373--17A-390. RESERVED.

DIVISION 7. CONFIDENTIAL INFORMATION

SECTION 17A-391. CONFIDENTIAL INFORMATION OR DATA.

Information and data on an industrial user obtained from reports, surveys, wastewater discharge permit applications, wastewater discharge permits, and monitoring programs, and from City inspection and sampling activities, shall be available to the public without restriction unless the industrial user specifically requests, and is able to demonstrate to the satisfaction of the City, that the release of such information would divulge information, processes or methods of production entitled to protection as trade secrets under applicable State law. The City reserves that right to have a court of competent jurisdiction review the request and the availability of the information under State law. When requested and demonstrated by the industrial user furnishing a report that such information should be held confidential, the portions of a report which might disclose trade secrets or secret processes shall not be made available for inspection by the public, but shall be made available immediately upon request to governmental agencies for uses related to the NPDES program or pretreatment program, and in enforcement proceedings involving the person furnishing the report. Wastewater constituents and characteristics and other "effluent data" as defined by 40 CFR 2.302, as amended, will not be recognized as confidential information and will be available to the public without restriction.

SECTIONS 17A-392--17A-410. RESERVED.

DIVISION 8. PUBLICATION OF LIST OF INDUSTRIAL USERS IN SIGNIFICANT NONCOMPLIANCE

SECTION 17A-411. PUBLICATION OF LIST OF INDUSTRIAL USERS IN SIGNIFICANT NONCOMPLIANCE.

The City shall publish annually, in the largest daily newspaper published in the municipality where the POTW is located, a list of the industrial users which, during the previous 12 months, were in significant noncompliance with applicable pretreatment standards and requirements. The term "significant noncompliance" shall mean:

(1) chronic violations of wastewater discharge limits, defined here as those in which 66 percent or more of wastewater measurements taken during a six-month period exceed the daily maximum limit or the monthly average limit for the same pollutant parameter by any amount.

(2) technical review criteria (TRC) violations, defined here as those in which 33 percent or more of wastewater measurements taken for each pollutant parameter during a six-month period equal or exceed the product of the daily maximum limit or the average limit multiplied by the applicable criteria (1.4 for BOD, TSS, fats, oils and grease, and 1.2 for all other pollutants except pH).

(3) any other discharge violation that the City believes has caused, alone or in combination with other discharges, interference or pass-through (including endangering the health of City personnel or the general public).

(4) any discharge of pollutants that has caused imminent endangerment to the public or to the environment, or has resulted in the City's exercise of its emergency authority to halt or prevent such a discharge.

(5) failure to meet, within 90 days of the scheduled date, a compliance schedule milestone contained in a wastewater discharge permit or enforcement order for starting construction, completing construction, or attaining final compliance.

(6) failure to provide, within 30 days after the due date, any required reports, including baseline monitoring reports, 90-day compliance reports, periodic self-monitoring reports, and reports on compliance with compliance schedules.

(7) failure to accurately report noncompliance.

(8) any other violation(s) which the City determines will adversely affect the operation or implementation of the local pretreatment program.

SECTIONS 17A-412--17A-430. RESERVED.

DIVISION 9. SURCHARGE COSTS*

*Cross references: Industrial waste surcharge, § 17A-521 et seq.

SECTION 17A-431. GENERALLY.

A schedule of charges for surcharge costs may be established. The amount of such charges shall be as established the General Schedule of Fees.

SECTION 17A-432. SURCHARGE FOR BOD AND SUSPENDED SOLIDS.

There is hereby levied a schedule of charges for surcharge costs for BOD and suspended solids. The amount of such charges are set forth in the General Schedule of Fees.

SECTIONS 17A-433--17A-450. RESERVED.

DIVISION 10. MISCELLANEOUS PROVISIONS

SECTION 17A-451. CHARGES AND FEES GENERALLY.

A. The City may adopt reasonable charges and fees for reimbursement of costs of setting up and operating the City's pretreatment program which may include:

(1) fees for wastewater discharge permit applications, including the cost of processing such applications.

(2) fees for monitoring, inspection, and surveillance procedures including the cost of collection and analyzing an industrial user's discharge, and reviewing monitoring reports submitted by industrial users.

(3) fees for reviewing and responding to accidental discharge procedures and construction.

(4) fees for filing appeals.

(5) other fees as the City may deem necessary to carry out the requirements contained herein. These fees relate solely to the matters covered by this article and are separate from all other fees, fines and penalties by the City.

B. The City may adopt additional charges and fees for (i) consistent removal by the City of pollutants otherwise subject to Federal pretreatment standards; and (ii) other fees as the City may deem necessary to carry out the requirements of the pretreatment program.

SECTION 17A-452. SCHEDULE OF FEES.

There is hereby levied a schedule of fees for certain permits, inspections, appeals, duplications and reproductions. The amount of such fees shall be as established in Chapter 60, the General Schedule of Fees.

SECTION 17A-453. ADDITIONAL CHARGES AND FEES.

The City may adopt additional charges and fees for:

(1) consistent removal by the City of pollutants otherwise subject to Federal pretreatment standards; and

(2) other fees as the City may deem necessary to carry out the requirements of the pretreatment program.

SECTIONS 17A-454--17A-480. RESERVED.

ARTICLE VIII.

RATES, CHARGES, BILLING AND COLLECTION PROCEDURES*

DIVISION 1. GENERALLY

SECTION 17A-481. BILLING.

Billings for sewer service shall be rendered at the same time and on the same bills issued for water service, but shall be shown as a separate item from the charge for water. If sewer service is commenced or terminated during a period for which bills will be rendered, billing shall be prorated on a daily basis.

SECTION 17A-482. DUE DATE AND PAYMENT GENERALLY.

The sewer service charge shall be due and payable from and after the date on the bill on which such charge is shown. Payment shall be made to the City Treasurer, but the Treasurer shall not accept payment for any sewer service charge without payment of the water bill on which said charge is shown, nor shall he accept payment of any water bill without payment also of any sewer service charge shown thereon.

SECTION 17A-483. USE OF WATER DEPOSITS FOR PAYMENT OF SEWER SERVICE CHARGES.

All deposits made by users of City water, as required by ordinance to guarantee payment of water bills, may also be applied to pay delinquent or defaulting sewer service charges of the user who made the deposit.

in whole or in part with water from wells or any source other than the City water system, such wells or other source of supply shall be registered with the Utilities Department. If the water from said wells or other supply is not measured by water meter, the owner or occupant shall, at his own cost, install and maintain a meter on said supplies in such a location and in such a manner as is satisfactory to the Utilities Department. These meters shall serve as a control for the establishment of the sewer service charge and shall be read monthly or bimonthly. If, in the opinion of the Director, the installation of a meter would be impractical, water consumption will be estimated at 100 gallons per capita per day or by the use of the winter period consumption base as defined in Section 17A-502 as determined by the Director.

E. *Basis for sewer user charge to be reviewed annually.* The basis for determining the sewer user charge shall be reviewed annually and shall be adjusted to reflect any increase or decrease in sewer and wastewater treatment costs based on the previous experience.

F. *Charge for metered sewage.* Any sewer user installing a meter to measure its actual sewage flow shall be charged as provided in Subsection (a).

G. *Non residential domestic users.*

(1) Defined. A nonresidential domestic user is any customer who does not meet the requirement for a residential domestic sewer user as defined in this section

(2) How charged. Nonresidential domestic users, who do not directly measure their sewer discharge but who measure water consumption as required by the Director, shall be charged for sewer service based upon actual or estimated water consumption as provided in Subsection (a).

SECTION 17A-502 WINTER PERIOD CONSUMPTION BASE.

The sewer user charge for each residential or housekeeping unit of a residential domestic user may be calculated, based upon a "winter period consumption base."

(1) Established accounts. For established accounts, said winter period consumption base shall be the average amount of water consumed by a residential or housekeeping unit during four months falling between October 1 of any one year and March 31 of the subsequent year. Said first four months shall be the four consecutive monthly billing periods or two consecutive bimonthly billing periods each and every day of which falls within the six months between October 1 and March 31. The winter period consumption base shall be recalculated annually and shall become effective after the last billing period of the base setting months.

(2) *New accounts.* If a residential domestic sewer user does not have a winter period consumption base at his current residential or housekeeping unit, for whatever reason, and had not relocated within the service area as provided in Subsection (3), a winter period consumption base of 7,000

SECTION 17A-484 SPECIAL PROVISIONS FOR RESALE OF WATER.

If water is sold by the City and metered to a person for resale to water consumers who are users of the City's sewerage system, such first purchasers shall be responsible to the City for the billing and collecting of all sewer service charges of such consumer and shall account to the City for all such sewer service charges at the time such first purchaser pays his water bill. If requested by the Director of Finance, a purchaser of water for resale to consumers shall furnish and certify the number and addresses of all of his water customers who are users of the City's sanitary sewerage system.

SECTION 17A-485 TERMINATION OF WATER OR SEWER SERVICE.

Failure to pay a sewer service charge in accordance herewith shall be cause for discontinuing and disconnecting either the sewer connection or water connection, or both.

SECTIONS 17A-486--17A-500 RESERVED.

DIVISION 2. USER CHARGES

SECTION 17A-501 SANITARY SEWER FEES.

A. Sewer User Charge. Rules and Regulations of the Piedmont Municipal Authority, including, but not limited to the regulation of rates and payment procedures associated with usage of the sanitary sewer system, are hereby adopted and incorporated herein by reference, applicable as if set out in full herein. Any violation of the rules and regulations of the Authority shall be punishable as provided in Section 1-108 of this Code.

(1) provided, however, that where billing is not based on actual sewer metering, the calculation of the volume discharge may be based upon the water flow or usage or a "winter period consumption base" for a residential domestic user as provided in Section 17A-502, when applicable.

(2) provided, however, there is an additional surcharge established for certain discharges as provided in this chapter. Provided further, this chapter prohibits certain discharges. The amount of such charge shall be as established in Chapter 60, the General Schedule of Fees.

B. *Residential domestic user.* For the purpose of this division, the "winter period consumption base" for a multiple unit "residential or housekeeping unit" shall be established per occupied unit, with 17A-71 each structure or portion of a structure which contains a self-sufficient dwelling with all facilities necessary for habitation considered to be a single unit.

C. *Water from private source.* Water used from private sources shall be metered in accordance with City standards to enable sewer service to be established and billed accordingly.

D. *Water wells.* In the event a lot, parcel of land, premises, or facility discharging sewage, industrial waste, water or other liquids, either directly or indirectly, into the City's sanitary sewer system, or which ultimately enters the sanitary sewer system, is supplied either

gallons shall be assigned for his new residential or housekeeping unit until a winter period consumption base, as provided in Subsection (1) above, shall be established for said user at said residential or housekeeping unit.

(3) *Customers relocating within the service area.* A residential domestic sewer user relocating within the service area to a similar residential or housekeeping unit during or after his winter period consumption base has been established shall be charged on the basis of either the winter period consumption base established at his previous premises or facility, or a winter period consumption base of 7,000 gallons, or a winter period consumption base in accordance with similar uses at similar premises, until such time as the new winter period consumption base is established for said residential or housekeeping unit as stated in Subsection (1). The Director, or his designated representative, shall decide which base would provide a reasonable sewer user charge for the new unit.

(4) *Multiple unit customers.* Multiple residential or housekeeping unit customers who have not established a "winter period consumption base" for each and every unit shall be charged as determined by the Director.

SECTION 17A-503. SPECIAL PROVISIONS FOR NONRESIDENTIAL USERS.

Nonresidential accounts shall have the user charge applied to total water usage or consumption. For nonresident users of the City's sewer system, the following conditions apply.

(1) *Sewer service charge.* All users of the City's sanitary sewer system having connections serving property without the City boundaries shall be charged according to the same schedule of rates on all water consumed or used per month, as set forth in the City's ordinances.

(2) *City not obligated to provide service.* the City does not obligate itself to furnish sanitary sewer service to any person whomsoever, but will furnish such service as is reasonable within its financial ability to do so.

(3) *Other municipalities.* All municipalities whose residents are served by any Piedmont sewer treatment facility shall enact sewer ordinances which are compatible with this chapter and all amendments thereto.

SECTION 17A-504. SPECIAL PROVISIONS FOR USERS HAVING PRIVATE WATER SERVICE.

If a user of the sanitary sewerage system does not use City water, but depends wholly or in part on wells or other private water supplies, estimated water consumption, as set forth in Section 17A-501, Subsection (d), shall determine the amount of water used for the purpose of computing the sewer service charge, or such user may install a meter acceptable to the Director, and the readings thereof shall govern.

SECTION 17A-505. ESTABLISHMENT OF WINTER PERIOD CONSUMPTION BASE FOR RESIDENTIAL DOMESTIC USERS APPLICABLE FOR THE PERIOD FROM APRIL 1, 2006 TO MARCH 31, 2007.

For the winter period October 1, 2005 through March 31, 2006, winter period consumption base will be established as follows:

(1) established winter period consumption base for 2004-5 shall be compared to the winter period consumption base for 2005-6 as calculated under the existing ordinance.

(a) where the single-family, duplex, tri-plex and four-plex winter period consumption base average increased by more than 1,000 gallons over the winter period consumption base of 2004-5, the winter period consumption base for winter period 2005-6 shall be 1,000 gallons more than the previous established 2004-5 winter period consumption base.

(b) where the winter base consumption base decreased, the winter period consumption base for winter period 2005-6 will be recalculated in the same manner as other years.

(c) where the winter base consumption base for apartment complexes larger than four-plex increased, the Superintendent of Utilities Customer Services will review the change and establish a wastewater average for that customer based on the customer's history.

(2) new accounts without an existing winter period consumption base will be calculated in accordance with the existing ordinance.

(3) in any month in which a customer's water use is less than the established winter period consumption base, the customer will be billed for sewer use at the water volume used that month.

(4) for the winter period October 1, 2005 through March 31, 2006, in order to provide adequate time for implementation of changes described in subsection (1) above, the winter period consumption base established during the winter period 2004-5 shall be extended and effective for bills issued by the City in April of 2006.

(5) except as expressly provided for in this ordinance, the applicability, establishment, and application of winter base consumption bases to sewer customers shall not change from the existing ordinance.

SECTIONS 17A-506--17A-520. RESERVED.

DIVISION 3. INDUSTRIAL WASTE SURCHARGE*

SECTION 17A-521. REQUIRED.

If the Director determines that an industrial waste is acceptable under the discretionary power given him under this chapter, the contributor of the industrial waste shall be charged and assessed a surcharge, in addition to any sewer user charges, if these wastes have concentrations greater than domestic wastewater.

SECTION 17A-522. CHARGE SUPPLEMENTAL.

When either or both the total suspended solids or BOD of water or waste accepted for admission to the City's sewerage works exceeds the values of these constituents for normal domestic sewage, the industrial user shall pay the industrial user surcharge in addition to any sewer user charges.

SECTION 17A-523. FORMULA FOR CALCULATION.

(a) The industrial user's surcharge shall be calculated by the following formula:
Cu = (Qu)(Qr) + (Bu)(Br) + (Su)(Sr)

Where:

TABLE INSET:

Cu	=	annual user surcharge
Qu	=	user's annual flow in millions of gallons
Qr	=	unit cost for flow in dollars per million gallons
Bu	=	user's annual discharge of excess BOD in pounds
Br	=	unit cost for BOD in dollars per pound
Su	=	user's annual discharge of excess suspended solids in pounds
Sr	=	unit cost for suspended solids in dollars per pound

and excess BOD is defined as the BOD contributed at a concentration greater than 250 milligrams per liter; excess suspended solids is defined as the suspended solids contributed at a concentration greater than 300 milligrams per liter.
(b) Unit costs shall be calculated as follows:
Qr = 0.5(OCt) + OCs/Qt
Br = 0.3(OCt)/Bt
Sr = 0.2(OCt)/St

Where:

TABLE INSET:

OCt	=	annual operating cost of wastewater treatment plants
OCs	=	annual operating cost of sewer collecting systems
Qt	=	annual flow rate to the wastewater treatment plants in millions of gallons
Bt	=	annual total BOD loading to the wastewater treatment plants in pounds
St	=	annual total suspended solids loading to the wastewater treatment plants in pounds.

SECTION 17A-524. AMOUNT.

The surcharge for industrial users shall be in such amount as established in the General Schedule of Fees.

SECTION 17A-525. METERS AND ADJUSTMENTS FOR UNPOLLUTED WASTES.

A. When the public water supply is used exclusively, the water consumption during the previous month, as determined from the meter records of the City, shall be the valid basis for computing a sewage flow, with reference to the surcharge for industrial users, unless actual sewage flow is measured by a recording meter of a type to be approved by the City. The owner shall maintain such device in proper condition to accurately measure such flow. Upon failure to do so, the water consumption shall be the basis for charges.

B. In cases where all or part of the water consumed is obtained from private supplies, wells, etc., such person shall provide and maintain at all times suitable metering devices, approved by the Director, in connection with all sources of private water unless the control manhole provided for in the preceding subsection shall be equipped with an approved volume measuring device. The volume of private water consumed during the previous month, together with the consumption of public water as determined from the records of the City, shall be the basis for computing the sewage volume, or the owner may install, at his expense, a approved metering device to accurately measure sewage flow as before mentioned.

C. When water is contained in a product, or is evaporated, or is discharged as unpolluted waste in an uncontaminated condition to surface drainage, an application may be made for a reduction in the volume of waste discharge to the public sewer; provided, that supporting data satisfactory to the Director are furnished. This data shall include a flow diagram, destination of the water supply or wastes and shall be supported by submetering data of a type satisfactory to the Director installed on such process piping at the expense of the private owner.

SECTION 17A-526. CHARGES FOR INITIAL YEAR; REPORTS AND ANNUAL REVIEW.

A. The surcharge for biochemical oxygen demand and suspended solids shall be based upon the analyses as determined in Section 17A-340. The applicable surcharge determined by such tests shall be assessed and shall continue for 12 months unless subsequent tests determine that the surcharge should be further increased or decreased. During the first year for new or existing industries required to file reports under Article VII, Division 5 of this chapter, the applicable surcharge shall be determined from a weighted average of the analyses reported and based upon the charges stated in Section 17A-524.

B. The basis for determining the surcharge shall be reviewed annually and shall be adjusted to reflect any increase or decrease in wastewater treatment costs based on the previous year's experience.

SECTION 17A-527. BILLING.

Billing of the industrial waste surcharge shall be by the month or bimonthly, shall be shown as a separate item on the regular bill for water and sewer charges, and shall be paid monthly or bimonthly in accordance with existing practices.
§§ 17A-528--17A-550. Reserved.

DIVISION 4. INDUSTRIAL COST RECOVERY

SECTION 17A-551. GENERALLY.

For the purpose of providing funds to reimburse the Federal Government for that portion of the construction of the treatment works which is allocable to the treatment of industrial wastes to the extent

attributable to the Federal share of the cost of construction, each industrial or commercial user, discharging more than the equivalent of 25,000 gallons per day of sanitary waste, shall be and charged an industrial cost recovery charge in proportion to each industrial user's contribution of flow, BOD, and suspended solids. The industrial cost recovery charge is in addition to the applicable user charge and any surcharges.

SECTION 17A-552. FORMULA FOR CALCULATION.

a. The industrial cost recovery charge shall be calculated by the following formula:
Cr + (Qu)(Qi) + (Bu)(Bi) + (Su)(Si)

Where:

TABLE INSET:

Cr	=	annual cost recovery charge
Qu	=	user's annual flow in millions of gallons
Qi	=	unit cost for flow in dollars per million gallons
Bu	=	user's annual discharge of BOD in pounds
Bi	=	unit cost for BOD in dollars per pound
Su	=	user's annual discharge of suspended solids in pounds
Si	=	unit cost for suspended solids in dollars per pound

B. Unit costs shall be calculated as follows:
Bi = Fb Xb/Bt
Si = Fs Xs/St
Qi = Fq Xf + Yf/Qt
Where:
TABLE INSET:

Fb	=	ratio of industrial BOD to total BOD
Fs	=	ratio of industrial suspended solids to total suspended solids
Fq	=	ratio of industrial flow to total flow
Xb	=	Federal contribution to cost in dollars for treatment facilities attributable to BOD
Xs	=	Federal contribution to cost in dollars for treatment facilities attributable to suspended solids
Bt	=	design BOD loading to the wastewater treatment facilities in pounds
St	=	design suspended solids loading to the wastewater treatment facilities in pounds
Xf	=	Federal contribution to cost in dollars for treatment facilities attributable to flow
Yf	=	Federal contribution in dollars for sewer collection systems attributable to flow
Qt	=	design flow rate to the wastewater treatment facilities in millions of gallons.

SECTION 17A-553. BASIS FOR DETERMINATION.

A. The basis for determining the industrial cost recovery charges for each industrial user shall be the annual flow and the annual contributions of BOD and suspended solids as determined from the analyses required in Section 17A-340.

B. The basis for determining the industrial cost recovery charges shall be reviewed annually and shall be adjusted to reflect any increase or decrease in each industrial user's contribution based on the previous year's experience. A new basis shall be established each year, and the charges so established shall be charged to users for billing periods starting in July of that year and for each billing period thereafter until and including billing periods ending in the month of June next following.

SECTION 17A-554. AMOUNT OF FEES.

The amount of fees assessed to reimburse the Federal Government shall be as established in the General Schedule of Fees.

SECTION 17A-555. BILLING.

Billing for the industrial waste recovery charge shall be by the month, bimonthly, or annually, shall be shown as a separate item on the regular bill for water and sewer charges, and shall be paid monthly, bimonthly or annually in accordance with existing practices.

SECTION 17A-556. LUMP SUM PAYMENTS.

Any industrial user who so desires may fulfill its industrial cost recovery obligation by making a lump sum payment for its entire share of the cost of construction of the treatment works at any time. Such payments shall relieve the industrial user of further industrial cost recovery payments, except that if the industrial wastewater flow or load of the industrial user shall increase, such industrial user shall be obligated to additional future payments for the increased flow or load.

SECTION 17A-557. TERMINATION.

If an industrial user discontinues use of the treatment works, the industrial cost recovery for such industrial user shall cease, and no further payments for such industrial user shall be due. The industrial cost recovery allocation for any industrial user that discontinues use of the treatment works shall not be reallocated to other industrial users of the system.

SECTIONS 17A-558--17A-580. RESERVED.

ARTICLE IX.

SEWERS OUTSIDE CITY

SECTION 17A-581. COMPLIANCE WITH CHAPTER.

No sanitary sewer constructed outside the City's boundaries, the flow of which is discharged or is to be discharged into the sanitary sewerage system of the City, shall be connected with the sanitary sewerage system of the City unless such sanitary sewer shall have been constructed in compliance with all the applicable terms of this chapter. After the sewer has been connected with the sanitary sewerage system of the City, all the applicable terms of this chapter shall be in full force and effect and shall apply to all persons in the district served by such sanitary sewer.

SECTION 17A-582. APPROVAL OF PLANS.

A. Whenever it is proposed to construct any sanitary sewer outside the City's boundaries and connect with the sanitary sewerage system of this City, the complete plans, specifications, and estimate of costs of such sewer shall be submitted to the Public Works Director.

B. If the Public Works Director finds from an examination of such plans and specifications that the proposed sanitary sewer complies with the laws of this State and that the design of the sewer is such that it will be practical to connect the same with the sanitary sewerage system of the City, then he shall authorize the construction of such sewerage system.

SECTION 17A-583. ENGINEERING AND INSPECTION FEES.

For any sanitary sewer to be constructed outside the City's boundaries, if such sewer is to be connected directly or indirectly with the sanitary sewerage system of the City, an inspection and engineering fee shall be paid to the City Treasurer at the time of the submission of the plans and specifications of such sewer to the Public Works Director. Such fee shall be an amount based on the estimated cost of such construction and inspection and shall be as established in Chapter 60, the General Schedule of Fees.

SECTION 17A-584. INSPECTION AND APPROVAL BY CITY.

A. Whenever the owner of a proposed sanitary sewer shall commence the construction of such sewer, he shall notify the Public Works Director, and the Public Works Director shall thereupon place a qualified inspector on such construction job; the inspector shall remain on duty at all times during the construction of such sanitary sewer.

B. Such inspector shall see that such sewer is constructed in compliance with the laws of this State and in accordance with the plans and specifications as approved by the Public Works Director.

C. When such sewer is completed, if the Public Works Director finds that such sewer has been in all respects constructed as provided for in this chapter and that all fees provided for in this chapter have been paid, then the Director, upon the request of the owner of such sewer, shall authorize the connection of such sewer with the sanitary sewerage system of the City.

SECTION 17A-585. Filing of original tracings of sewer plans.

Upon the completion, final acceptance by the Public Works Director, and the connection of a sewer with the sanitary sewerage system of the City, the original tracings of all plans and profiles for the construction of such sanitary sewer shall be corrected by the engineer who prepared the same to show such sewer as it is actually built, and all of such original tracings of the plans and profiles shall be filed in the office of the Public Works Director.

SECTION 17A-586. SPECIAL PROVISIONS FOR MUNICIPALITIES.

A. When the sanitary sewer that is proposed to be connected to the sanitary sewerage system of the City is to be constructed by an incorporated City or town, such City or town shall have the option of using the engineering and inspection services of the Public Works Director, upon payment of the fees provided for herein, or such City or town may provide its own engineering and inspection services.

B If the City or town elects to provide its own engineering and inspection services, then such engineering inspection shall be performed by a registered professional engineer, and the construction shall be equal to the standard specifications of this City.

SECTION 17A-587. MAINTENANCE.

The City shall assume no liability or obligation for the operation and maintenance of a sanitary sewer system as long as the district served by such sewer remains outside the City's boundaries. Prior to the authorization provided in this article, the person desiring to construct the sewer shall enter into a contract with the City in which such person agrees to provide for the operation of that portion of the sewer which is not within the City's boundaries.

SECTION 17A-588. SEWER CONNECTION PERMIT.

A. No person shall connect or authorize to be connected any premises that are located outside the City's limits to or with any sanitary sewer that shall connect directly or indirectly with the sanitary sewer system of the City without first obtaining a special sewer connection permit.

B. Any person desiring to obtain a special sewer connection permit shall make application to the Public Works Director and furnish to him a detailed plan of the desired connection. After inspection of the plan and existing sewer facilities the Public Works Director shall present the application with his recommendations thereon to the City Council. Special sewer connection permits shall be issued only with the approval of the City Council.

C. Upon approval by the City Council of the issuance of the permit, the applicant therefor shall first pay to the City Treasurer the fee established in the General Schedule of Fees.

SECTIONS 17A-589--17A-620. RESERVED.

ARTICLE X.

SEPTIC TANKS

DIVISION 1. GENERALLY

SECTION 17A-621. DEFINITIONS AND INTERPRETATION.

A. The following words, terms and phrases, when used in this article, shall have the meanings ascribed to them in this section, except where the context clearly indicates a different meaning:

(1) *Director of Health* means the Director of the Health Department or his designated representative.
(2) *Small sewage treatment system* includes septic tanks, subsurface absorption fields, and total retention lagoons as described in the State Department of Environmental Quality Standards for Water Pollution Control Facilities, Chapter 120, or Oklahoma State Department of Health Bulletin No. 600.

B. No provision of this chapter which is not contained in this article shall be applicable to the provisions of this article.

SECTION 17A-622. COMPLIANCE WITH STATE STANDARDS.

Any small sewage treatment systems installed, constructed, repaired or extended under this article shall comply with the minimum specifications and requirements of the most recent edition and amendments to the Oklahoma Department of Environmental Quality Standards for Water Pollution Control Facilities, Chapter 120, or Oklahoma State Department of Health Bulletin No. 600, whichever is applicable, copies of which are on file in the office of the City Clerk.

SECTION 17A-623. PERCOLATION TESTS.

Prior to installing or constructing any small sewage treatment system with a subsurface absorption system, the installer thereof shall submit to the Director of the Health Department the results of a percolation test made at the site of the proposed installation and conducted by a qualified registered professional sanitarian or a registered professional engineer. The Director of health may perform the percolation test upon request and upon payment of the fee established by the Health Department of Canadian County.

SECTION 17A-624. INSPECTIONS.

No part of a small sewage treatment system shall be covered or concealed in any manner unless it has been inspected for compliance with the applicable provisions of this article by the Director of the Health Department or his authorized representative. No person shall use or operate any small sewage treatment system installed, constructed, repaired or extended under this article without it first having been inspected and approved by the Director of the Health Department. The cost for the inspection shall be included in the percolation test fee as established by the Health Department.

SECTIONS 17A-625--17A-650. RESERVED.

DIVISION 2. LICENSING AND CERTIFICATION OF CONTRACTORS*

SECTION 17A-651. REQUIRED.

No person shall install, construct, repair or extend any small sewage treatment system within the City, unless he has been certified and licensed to install small sewage treatment systems, in accordance with the provisions of this article; provided, however, that this license shall not be required of any person holding a current plumbing contractor's certificate of registration as provided for by ordinance.

SECTION 17A-652. EXAMINATION.

The Director of health is hereby authorized to prepare and administer an examination for applicants for a license to install small sewage treatment systems and determine whether each applicant has adequate knowledge of the design, construction, operation and use of small sewage treatment systems for the purpose of installing, constructing or repairing such systems. If it is determined from such examination that an applicant is qualified, the Director of health shall issue a certificate to that effect.

SECTION 17A-653. ISSUANCE AND FEES.

The City Clerk shall, upon application, and receipt of the fee established in Chapter 60, the General Schedule of Fees, issue a license for the installation of small sewage treatment systems to any person who holds a certificate from the Director of health to the effect that such applicant is qualified for the license; provided, however, that a bond has been secured by the applicant as provided in Section 17A-655.

SECTION 17A-654. TERM AND RENEWAL.

A license issued pursuant to the provisions of this division shall expire as provided in Section 26-11, unless sooner suspended or revoked. Such a license may be renewed without penalty within 90 days after its expiration.

SECTION 17A-655. BOND.

A. Before a license to install a small sewage treatment system is issued or renewed, each applicant shall secure a bond with approved sureties, running to the City, and shall keep it in force for the entire duration of the license. The bond shall be in the amount of $1,000.00 and shall be conditioned that the licensee shall comply with the provisions and requirements of this Code and other ordinances and regulations of the City. All bonds shall provide that the principal and licensee shall save the City harmless from any and all damage resulting from or in any way growing out of any injury or damage received by anyone due to negligence or unskilled work on the part of the licensee, his agents, or employees. All bonds shall be approved by the Municipal Counselor as to form and by the City Council as to sufficiency and shall then be filed with the City Clerk.

B. No bond shall be required of:

(1) a person installing a small sewage treatment system for the personal use and benefit of that person and his family; and

(2) plumbing contractors bonded pursuant to other ordinances.

SECTIONS 17A-656--17A-680. RESERVED.

DIVISION 3. SEPTIC TANK CLEANERS*

*State law references: Septic tank cleaners, 27A O.S. § 2-6-801.

Part A. General Provisions

SECTION 17A-681. SANITATION STANDARDS.

The Director of Health shall provide minimum sanitation specifications for vehicles and equipment owned or operated by the licensee or applicant for the license required by the provisions of this division and for disposal areas. The specifications shall not in any event be less than the standards of sanitation as set forth by applicable health laws of the State or this Code.

SECTION 17A-682. DISPOSAL OF SEPTIC TANK MATERIALS.

All equipment and trucks cleaning and servicing septic tanks, except septic tanks servicing a produce house or packing plant, shall dispose of all materials therefrom at a site to be designated by the Director. A list of authorized sites shall be kept on file with the Wastewater Quality Division of the Department.

SECTION 17A-683. DISCHARGE OF SEPTIC TANKERS.

A. Septic tank haulers shall pay the total of a sewer user surcharge and the current user fee as established in Chapter 60, the General Schedule of Fees, for all effluent discharged directly or indirectly into The Piedmont System.

B. Each and every discharge shall be metered in the presence of the Utilities Director or his designated representative.

C. Should any septic tanker be discharged in the absence of the aforementioned supervision by the Utilities Director or his designated representative, the septic tanker shall be presumed full and a fee shall be charged accordingly.

D. Failure to meet any of the requirements of this section shall be deemed a violation hereof.

E. Each and every violation of this section shall be a separate offense.

F. The Municipal Court shall have original jurisdiction to hear and determine all prosecutions when a violator of this section is charged.

G. The maximum punishment which may be levied for violation of this section shall be a fine not exceeding $1,000.00 excluding costs, and imprisonment not to exceed six months in the City Jail or both such fine and imprisonment.

H. The Utilities Director, or his designated representative, is authorized, after notice and a hearing, to revoke any permit or license to haul or discharge septic tankers upon a judicial determination that said hauler, his agent or employee, has violated this section.

SECTION 17A-683.1. SECURITY DEPOSIT, SEPTIC.

A. Every applicant for a septic sanitation service license, or for renewal of said license, shall be required to maintain a security deposit with the City as a pre-condition to issuance, reissuance or renewal of the septic sanitation service license. The amount of the security deposit shall be as provided in Chapter 60, the General Schedule of Fees.

B. The Director is hereby authorized to waive the security deposit for any person who demonstrates and continues to demonstrate a good record of payment of sewer user fees and surcharges. Provided, however, the Director may reinstate the security deposit requirement for any person who fails to maintain a good payment record.

C. The security deposit shall guarantee payment of all sewer user fees and sewer user surcharges for discharging septic materials into the City sewer system. The security deposit shall be paid to the City Treasurer. The City Treasurer and the Director are each authorized to apply all or a portion of said security deposit, at any time, to any delinquent fees or charges or interest thereon owed by the licensee.

D. The holder of the septic sanitation service license shall be entitled to return of the deposit, or the remainder thereof not applied as provided in this section, without interest, upon request, after the holder has permitted his septic sanitation service license to expire and after payment of all outstanding fees, surcharges, and any interest or late charges thereon due for septic materials discharged by the holder while engaging in business under the license.

SECTION 17A-684. DISPOSAL OF MATERIALS FROM PRIVIES.

A. Material from pit privies, privy vaults, unsewered privies, and septic tanks serving a produce house, or packing plant, shall not be dumped into a manhole but shall be disposed of by dumping into a hole or trench dug for this purpose and shall be immediately covered with not less than 24 inches of dirt.

B. A person holding a license issued pursuant to the provisions of this division shall first designate the location of disposal of the said material to the Director of Health and obtain the approval of the location by the Director of Health, whether the place of disposal be located within or without the City's limits.

SECTION 17A-685. Time of disposal.

All material from any receptacles included within this article shall be disposed of only during the daylight hours whether it be dumped into a designated manhole or any other disposal location.

SECTION 17A-686. INSPECTIONS.

A. The Director of Health shall have the right of inspection of all equipment, trucks and disposal areas of a person to whom a license is issued pursuant to the provisions of this division at any reasonable hour that he desires to make the inspection.

B. Failure of the equipment or trucks to meet the required sanitation requirements shall be grounds for revocation of any licenses to operate the same. Failure of any disposal area to meet the required sanitation standards shall be grounds for immediate disapproval of the further use of the disposal area by the Director of Health.

SECTION 17A-687. SERVICE GENERALLY.

The holder of a septic sanitation service license shall be required to perform the service of cleaning and servicing privy vaults, septic tanks, pit privies, unsewered privies or similar receptacles upon request of any person who desires the service and who promises or tenders payment for the services. Refusal to clean or service any privy vaults, septic tanks, pit privies, unsewered privies or similar receptacles without good cause shall be grounds for revocation by the Director of Health of the license issued to such person.

SECTIONS 17A-688--17A-700. RESERVED.

Part B. License*

SECTION 17A-701. REQUIRED.

No person shall engage in the business of cleaning and servicing privy vaults, septic tanks, unsewered privies, pit privies or similar receptacles until he has first procured a septic sanitation service license to do so issued by the City Clerk.

SECTION 17A-702. INSPECTION OF EQUIPMENT.

No septic sanitation service license shall be issued to any person until the applicant has first filed with the Director of Health a description of the equipment owned or operated by the applicant. The Director of Health shall inspect the equipment, and, if it meets the standards of sanitation required by this division, the Director of Health shall authorize the issuance of a license to the applicant and certify the same to the City Clerk.

SECTION 17A-703. FEE.

A person who must obtain a septic sanitation service license shall pay to the City Treasurer the fee established in the General Schedule of Fees.

SECTION 17A-704. TERM.

A license issued pursuant to the provisions of this division shall expire on June 30th of each year, unless sooner suspended or revoked.

SECTION 17A-705. IDENTIFICATION OF LICENSE ON EQUIPMENT AND TRUCKS.

All equipment and vehicles owned or operated by the holder of a septic sanitation service license shall have the name and the registration number of the licensee painted on both sides of the tank in a color easily discernible and in letters and numbers of not less than four inches in height.

SECTIONS 17A-706--17A-730. RESERVED.

ARTICLE XI.

INDIVIDUAL AEROBIC WASTEWATER SYSTEMS

SECTION 17A-731. INDIVIDUAL AEROBIC WASTEWATER SYSTEMS.

"*Individual aerobic wastewater systems*" shall mean an individually owned wastewater system that sprays wastewater effluent into the air. "Individually owned" shall mean a wastewater system, which is not a publicly owned treatment works as defined in this chapter. Properties served by an individual aerobic wastewater system shall not be connected to the publicly owned treatment works except upon disconnection from the individual aerobic wastewater system and payment of all expenses, costs, and fees related to the expansion, transmission, extension and/or connection to the municipal wastewater collection and treatment system to serve that property whether incurred prior or subsequent to connection to the POTW.

SECTION 17A-732. DISCHARGE OF WASTEWATER EFFLUENT PROHIBITED.

No person shall spray wastewater effluent from an individual aerobic wastewater system upon a public street, public property or property owned by another person. No property owner shall permit wastewater effluent from an individual aerobic wastewater system to be sprayed upon children's toys, public streets, public property or property owned by another person. A minimum setback of 25 feet shall be maintained from the surface application area to adjoining public street, public property, or property owned by another person.

SECTION 17A-733. REQUIREMENTS FOR INSTALLATION, OPERATION, AND MAINTENANCE.

Any person operating an individual aerobic wastewater system or permitting another to operate an individual aerobic wastewater system on his or her property must:

(1) obtain and maintain all applicable permits from the Oklahoma Department of Environmental Quality for the installation, operation, and maintenance of an individual aerobic wastewater system;

(2) obtain and retain the services of a maintenance company licensed by the Oklahoma Department of Environmental Quality for maintenance of the individual aerobic wastewater system to assure that it is operated and maintained in accordance with manufacturers recommendations and requirements and those of the Oklahoma Department of Environmental Quality;

(3) maintain such landscaping, signs, and security fencing around the individual aerobic wastewater system as may be required from time to time by the City;

(4) provide subsequent property owners a copy of the log and notice of these requirements; and

(5) keep a log showing the individual aerobic wastewater system was installed, operated, and maintained in accordance with this section.

SECTION 17A-734. ESTABLISHING RESPONSIBILITY FOR COMPLIANCE AND VIOLATION.

The property owner(s) and the occupant(s) of property served by an individual aerobic system shall each be responsible for the proper installation, operation, and maintenance of the individual aerobic wastewater system and shall each be subject to citation for violation of any provision of this article.

SECTIONS 17A-735--17A-799. RESERVED.

ARTICLE XII.

PRETREATMENT FACILITY SERVICE AND WASTEWATER TRANSPORTING AND DISPOSAL

DIVISION 1. GENERAL PROVISIONS

SECTION 17A-800. DEFINITIONS.

The following words, terms and phrases, when used in this article, shall have the meanings ascribed to them in this section, except where the context clearly indicates a different meaning:

(1) *Department,* as used or referenced in this article, means the Utilities Department of the City of Piedmont and its designated representatives.

(2) *Director,* as used or referenced in this article, means the Director of the Utilities Department or his designated representatives.

(3) *Disposal, disposing* or *dispose,* as used or referenced in this article, means the receiving, depositing, disposing, storing, discharging, or otherwise putting wastewater from a pretreatment facility in a receptacle, vehicle, or place other than the pretreatment facility of origin or the initial transporting container or vehicle.

(4) *Grease,* as used or referenced in this article, means wastewater which includes petroleum oil, fats, oils or greases of animal or vegetable origin and wastewater from a pretreatment facility designed for grease removal.

(5) *Industrial user* or *user,* as used or referenced in this article, means a source of direct or indirect discharge of industrial waste which does not necessarily constitute a "discharge of pollutants" under regulations issued pursuant to the Federal Water Pollution Control Act, also known as the Clean Water Act, as amended. 33 U.S.C. 1251 et seq.

(6) *License,* as used or referenced in this article (unless otherwise specifically qualified), means an annual pretreatment facility service and wastewater transporting license established by this article. Licensee shall mean a person holding a valid current license issued in his name.

(7) *Piedmont-County Health Department,* as used or referenced in this article, means the legal entity by that name established, pursuant to Title 63 of the Oklahoma Statutes, and its designated representatives.

(8) *POTW,* as used or referenced in this article, means that portion of the publicly owned treatment works designed to provide treatment of wastewater.

(9) *Pretreatment facility or pretreatment facilities,* as used or referenced in this article, means any facility or receptacle which is required by any provision of this Code to collect, filter, or pretreat nondomestic wastewater.

(10) *Service,* as used or referenced in this article, means the inspecting, cleaning, constructing, installing, operating or maintaining of a pretreatment facility, or any portion thereof. Provided, however, service as defined in this subsection shall not include installation or maintenance of pretreatment facilities by licensed plumbers under the BOCA Code.

(11) *Transport, transporting* or *transportation,* as used or referenced in this article, means the transporting, hauling, moving or otherwise removal of wastewater from a pretreatment facility.

(12) *Wastewater,* as used or referenced in this article, means the liquid and water-carried industrial or domestic wastes, including but not limited to grease, from all sources, including, but not limited to, dwellings, commercial buildings, industrial facilities, manufacturing facilities, and institutions, and any groundwater, surface water, or storm water that may be present, whether treated or untreated, and which flows directly or indirectly into, or is permitted to enter, the municipal wastewater collection treatment system.

(13) All terms used or referenced in this article but not defined in this article shall have the meaning set forth for said term in this Code.

SECTION 17A-801. PRETREATMENT FACILITY SERVICE AND WASTEWATER TRANSPORTING LICENSE.

A. Persons who engage in: (1) servicing wastewater pretreatment facilities or (2) the removal or transportation of wastewater from pretreatment facilities must first procure an annual license which shall be issued by the City Clerk. However, any person may dispose of wastewater from a grease trap, as provided in Section 17A-811(d).

B. Persons who engage in the disposal of wastewater from pretreatment facilities must have all requisite State and local licenses and registrations. The license is not intended to supersede or waive any State requirement or regulation upon persons who engage in the handling of hazardous baste. However, owners and operators of authorized disposal sites shall not be required to obtain a license to receive wastewater pursuant to this article.

C. Whenever any person shall be charged for engaging, without a license, in the servicing of a wastewater pretreatment facility; for the removal or transporting of wastewater from a pretreatment facility; or for disposal of wastewater from a pretreatment facility, subsequent renewal, issuance or reissuance of the license shall not be a defense.

SECTION 17A-802. IDENTIFICATION.

A. All persons who drive vehicles for the purpose of transporting or disposing of wastewater must obtain any appropriate State driver's license.

B. Any person engaging in the cleaning or servicing of pretreatment facilities or transporting or disposing of wastewater from pretreatment facilities must bear his license and/or plumbing license, and a current driver's license or other picture identification.

SECTION 17A-803. LICENSE FEE.

A person who must obtain a license shall pay to the City Treasurer the fee prior to obtaining or renewing the license as provided in the General Schedule of Fees. The license shall be for one calendar year, provided, however, any person may in December purchase a license for the next calendar year.

SECTION 17A-804. EQUIPMENT, VEHICLES AND RECEPTACLES.

A. All equipment and vehicles operated by or utilized to transport or dispose of wastewater must meet the applicable State equipment and vehicle standards. All equipment and vehicles utilized to transport or dispose of wastewater must annually be inspected and approved by the County Health Department and registered with the City. Provided, however, that on request, the wastewater transporter shall permit the Director and/or the representatives of the County Health Department to inspect any vehicle or receptacle used to transport wastewater or grease.

B. No person shall transport: hazardous wastewater; nonhazardous wastewater from pretreatment facilities; wastewater from a septic tank in the same receptacle at the same time. All persons must provide separate receptacles or provide for separate compartments within a receptacle to prevent commingling of hazardous wastewater; nonhazardous wastewater from pretreatment facilities; and/or wastewater from a septic tank, or must transport hazardous wastewater, nonhazardous wastewater and wastewater from septic tanks as separate loads.

C. The Director and/or the County Health Department may inspect any vehicle owned or utilized by a licensee at any time to determine whether the vehicle meets the requirements of this article.

D. Only a licensee may operate or drive a vehicle for the purpose of transporting wastewater from a pretreatment facility.

E. No person shall store wastewater in a vehicle for more than a maximum of three working days.

F. A licensed plumber or a licensee may pump nonhazardous wastewater from a pretreatment facility into a metal drum during maintenance of said facility. However such temporary storage for said purpose may not exceed 24 hours. All wastewater removed from the pretreatment facility for this purpose must, be returned to the facility or disposed of in accordance with the provisions of this article.

G. No person shall transport wastewater from a pretreatment facility in a vehicle or equipment unless the vehicle or equipment has been inspected and approved by the Piedmont-County Health Department and registered with the City, as provided in this article.

H. All equipment and vehicles utilized to transport wastewater from a pretreatment facility shall have the City registration number painted on both sides of the tank in a color easily discernible and in numbers and letters not less than four inches in height.

I. All equipment and vehicles utilized to transport wastewater from a pretreatment facility to be inspected by the County Health Department must annually meet City and State standards for transporting sanitary septic material and the provisions of this article. Notwithstanding any other provision of this article, an inspection and registration of a vehicle or equipment any time in January shall be retroactively effective to January 1st of that year. Upon presentation to the City in January of a current valid registration as required by this article, citations issued pursuant to this article during said same January for use of an unregistered vehicle or equipment shall be dismissed. However, vehicles and equipment inspected and registered after January 31st shall not be retroactive in effect and shall not affect any citations issued hereunder.

J. Equipment and vehicles inspected and registered pursuant to this chapter for the purpose of transporting wastewater from septic tanks are also required to be inspected and registered pursuant to this article. If presented for both inspections at the same time, the licensee shall pay both the standard fee for inspection and registration of vehicles and equipment transporting sanitary septic material, as required in this chapter, and the fee set forth in Section 17A-805(b) for inspection and registration pursuant to this article. If equipment or vehicle transporting wastewater is required to be inspected and registered pursuant to this article, but is presented separately from the inspection and registration required for equipment and vehicles transporting sanitary septic material, then the owner shall pay both the fee set forth in Section 17A-805(a) and the applicable standard fee for inspection and registration of vehicles and equipment transporting sanitary septic materials set forth in this chapter upon presentation for same.

K. Equipment and vehicles failing to meet the requirements of this article may be re-inspected during said same year without additional charge or fee. No equipment or vehicle which fails the inspection required by this article shall be registered until the equipment or vehicle is inspected and has passed same.

SECTION 17A-805. INSPECTION AND REGISTRATION FEE.

All equipment and vehicles to be utilized in: the servicing of wastewater pretreatment facilities; the removal or transportation of wastewater from pretreatment facilities; or the disposal of wastewater from pretreatment facilities, must be inspected and registered annually as provided in this article. The owner or operator shall pay to the City Treasurer the appropriate inspection and registration fee prior to so utilizing the equipment or vehicle, as provided in the General Schedule of Fees.

SECTION 17A-806. DISPOSAL OF WASTEWATER.

A. The disposal of wastewater must be by a licensee:

(1) into a sanitary landfill and/or a land application site as authorized and approved by the Director; or

(2) into a private waste reclamation facility as authorized and approved by the Director; or

(3) into the City wastewater system as authorized and approved by the Director.

B. The Director and the County Health Department are hereby authorized to designate authorized and approved landfills, private waste reclamation facilities and other authorized disposition of wastewater. The Director may withdraw such designation should the owner or operator of the disposal site violate any provision of this article. A list of the authorized disposal sites shall be on file with the Wastewater Quality Division of the Department.

C. The disposal of wastewater from a pretreatment facility other than as provided in the Code, is expressly prohibited and shall be a violation by both the industrial user and/or its licensee.

D. Any wastewater unacceptable for discharge into the City's sanitary sewer system must meet applicable State requirements for transportation and disposal.

SECTIONS 17A-807--17A-810. RESERVED.

DIVISION 2. RECORD KEEPING AND REPORTING

SECTION 17A-811. INDUSTRIAL USERS CONTRACT FOR SERVICES, TRANSPORTATION AND DISPOSAL.

A. All industrial users required by this Code to provide wastewater pretreatment shall maintain and, when requested, deliver to the Director a copy of each agreement or contract for service of the pretreatment facility and a copy of each agreement or contract for the removal, transporting or disposal of wastewater from the pretreatment facility.

B. Should an industrial user assume the responsibility for servicing its wastewater pretreatment facilities or for removing, transporting or disposing of its wastewater from its pretreatment facilities, the industrial user shall so state in a letter delivered to the Director prior to performing any such service. Nothing herein shall be deemed to waive the requirements of this article except as provided in Subsection (d) of this section.

C. No industrial user shall service or permit any person to service its wastewater pretreatment facilities or to remove, transport or dispose of wastewater therefrom without a current valid license except as provided in Subsection (d) of this section.

D. A user with an existing inside grease trap may, upon the prior written consent of the Director, dispose of grease from said grease trap upon the conditions and as authorized by the Director. Authorization may be revoked by the Director at any time upon notice.

SECTION 17A-812. RECORD KEEPING LOGS AND FORMS.

A. All persons involved in the discharging, generating, transporting or disposal of grease shall cooperate and participate in the logging and tracking of grease from the pretreatment facility. The handling and disposition of grease shall be tracked and logged from the pretreatment facility of origin to final disposal in an authorized site.

B. The Department shall promulgate and generate all forms pursuant to this Code. Forms are available in the Wastewater Division of the Department upon payment of the fees and required deposits as established in Chapter 60, The General Schedule of Fees. The licensee must utilize forms promulgated by the Department.

C. Each licensee must return all unused forms upon cessation of business. The licensee shall be responsible for all outstanding forms and the use of said forms.

D. Each licensee purchasing a set of forms must make a deposit which shall be returned, without interest, upon the return of all unused forms, if any, should the licensee decide to cease engaging in business. The licensee shall demonstrate and certify, to the satisfaction of the Director, his return or use of all forms purchased as a pre-condition to return of the deposit. Should the licensee use the last of the forms obtained hereunder and continue to engage in business, then the deposit may be rolled over to guarantee return of a subsequently purchased set of forms.

E. Log forms shall only be provided to licensees.

F. The appropriate log shall be made and kept readily and immediately available by the licensee to the Director, the City, the City-County Health Department and the approval authority upon request. Upon request by the Director or any of the aforementioned public entities, the licensee shall provide a copy of the log for any service provided within the past two years.

G. The licensee shall provide annually, with its application or request for renewal of its license, a copy of all logs and service contracts for the past two years.

H. A copy of all logs since the last submitted to the City, signed by the user and the licensee, shall be provided to the Piedmont-County Health Department for its records and the records of the City as a part of the periodic health inspection conducted by the Piedmont-County Health Department.

I. The licensee shall maintain the appropriate logs and copies of all contracts to service a pretreatment facility for two years.

J. Failure of the user to maintain or provide logs or the service contracts as required hereby shall be grounds to terminate wastewater and/or water service; to suspend, revoke, or deny renewal of the industrial discharge permit; and/or such other enforcement penalty as provided in this article for violation of any provision.

K. The user shall permit the Director and/or the representatives of the County Health Department to inspect its grease traps and other pretreatment facilities upon request during regular operating hours.

SECTION 17A-813. SERVICE LOG FOR INDUSTRIAL USERS.

Any person required by this Code to monitor grease in their discharge or provide wastewater pretreatment facilities for grease removal and any person permitted to provide service hereunder shall keep a service log of all persons who service their pretreatment facilities. The service log shall include:

(1) the name and industrial discharge permit number of the industrial user;

(2) the address of the pretreatment facility;

(3) the date and hour of service;

(4) the nature of the service;

(5) the volume of wastewater, if any, removed or discharged from the pretreatment facility;

(6) the name and license number of the service provider; and

(7) the authorizing signature of the industrial user and the service provider.

SECTION 17A-814. TRANSPORTATION LOG FOR INDUSTRIAL USERS.

Any person required by this Code to monitor grease in their discharge or provide wastewater pretreatment facilities for grease removal and any person permitted to provide transportation hereunder shall keep transporting logs of all persons who remove, transport or dispose of their wastewater. The transporting log shall include:

(1) the name and industrial discharge permit number of the industrial user whose pretreatment facilities were the source of the wastewater;

(2) the address of the pretreatment facilities which was the source of the wastewater;

(3) the date and hour wastewater was removed from the pretreatment facility;

(4) the approximate volume of wastewater removed;

(5) the name and license number of the transporter;

(6) the State registration numbers of the transporter's vehicle; and

(7) the authorizing signature of the industrial user and the transporter.

SECTION 17A-815. DISPOSAL LOG.

Any person transporting or disposing of wastewater from a pretreatment facility and any person authorized to receive wastewater hereunder shall keep disposal logs. The disposal log shall include a copy of the transport log and the following:

(1) the date and hour of disposal;

(2) the volume of wastewater disposed;

(3) the name and address of the authorized disposal site; and

(4) the authorizing signature of the transporter and the operator of the disposal site.

The transporter shall provide the operator of the authorized disposal site two copies of the disposal log. The operator of the authorized disposal site shall maintain one copy of each disposal log for two years and mail the other to the City weekly. Failure of the operator of the authorized disposal site to maintain or provide such disposal logs shall be a violation of this Code. Acceptance of wastewater at a disposal site without a copy of the transport log shall be a violation of this Code.

SECTION 17A-816--17A-819. RESERVED.

DIVISION 3. SITE INSPECTIONS

SECTION 17A-820. INSPECTION OF WASTEWATER SOURCE OR SITE.

Should any person request the assistance of the City in determining the nature of waste or wastewater to be removed from a source or site in the City for removal, transportation or disposal, in accordance with this Code, the Director may inspect the source or site and witness the sampling of said waste or wastewater. The requesting person shall pay such inspection fees as established in Chapter 60, The General Schedule of Fees. Provided, however, any costs of testing or analysis of said waste or wastewater shall not be borne by the City.

SECTIONS 17A-821--17A-829. RESERVED.

DIVISION 4. ENFORCEMENT AND PENALTIES

SECTIONS 17A-830--17A-841. RESERVED.

SECTION 17A-842. LICENSE, DENIAL, REVOCATION OR SUSPENSION.

A license may be denied, revoked or suspended, or renewal denied, as provided in the Code.

SECTION 17A-843. ENFORCEMENT AUTHORITY.

The Director is hereby authorized to issue citations for the enforcement of any provision of this article.

ARTICLE II

SEWER SYSTEM GENERAL SCHEDULE OF FEES.

SECTION 17B1. TITLE AND PURPOSE.

This chapter shall be known as the "General Schedule of Fees" and shall contain the dollar amounts of all fees, except taxes and certain other fees, authorized in the Piedmont Municipal Code for Sanitary Sewer Services.

SECTION 17B2. FEE SCHEDULE

SECTION 17B3. RESERVED.

SECTION 17B4. AUTHORIZATION TO CODIFIER TO AMEND WORDING.

As pages of the Piedmont Municipal Code are necessarily pulled for supplementation, wherever the language "the amount of the fee shall be adopted by separate or independent ordinance" or similar language appears, such wording shall be changed to read, "The amount of such fee shall be as established by the General Schedule of Fees."

SECTION 17B5. PAYMENT REQUIRED.

All persons required by the Piedmont Municipal Code to pay a fee for a license, permit, certificate, inspection, action, use, or other service shall pay to the City the amount established in the General Schedule of Fees.

SECTION 17B6. CITY CLERK TO MAINTAIN COPIES.

At least three copies of the General Schedule of Fees shall be kept in the office of the City Clerk for public use, inspection and examination. The City Clerk shall keep copies of said schedule for distribution or sale at a reasonable price.

TITLE 17B. SEWERS AND SEWAGE DISPOSAL

Article I. In General

SECTION 17B17A-1. PERMIT TO MAKE CONNECTION TO SEWER.

A. Reserved

B. All other sewer connections:

fee where no special assessment has been made, residential taps . . . $_____
to public sewer where no special assessment made

SECTIONS 17B17A-17--17B17A-20. RESERVED.

Article VII. Industrial or Harmful Discharges

SECTION 17B17A-2. INDUSTRIAL PRETREATMENT FEE STRUCTURE.

TABLE INSET:

item #	fee for	annual cost
1.	categorical pollutant discharge permit (new)	$500.00
2.	categorical pollutant discharge permit (renewal, existing modified)	250.00
3.	noncategorical pollutant discharge permit (new)	50.00
4.	noncategorical pollutant discharge permit (renewal)	25.00
5.	filing appeals	100.00
6.	categorical pollutant permit (potential to discharge new)	250.00
7.	categorical pollutant permit (potential to discharge, renewal, modified)	125.00

8.	noncategorical pollutant potential to discharge permit (new)	50.00
9.	noncategorical pollutant potential to discharge permit (renewal or existing modified)	25.00
10.	private water/sewer meter inspection verification, reverification	50.00
11.	emergency industrial waste disposal inspection	50.00
12.	requested categorical pretreatment facility inspection	50.00
13.	duplication of an approved permit	10.00
14.	change of name/permittee due to change in ownership (with no change in operations)	25.00
15.	reproduction of Federal regulations/other requested material	0.25 ea. one-sided page 8 1/2 × 11 or 8 1/2 × 14

Provided however, the fee for any permit issued for a term of less than one year shall be a proportionate amount of the above referenced annual fee.

SECTION 17B17A-3. PERMIT FOR DISCHARGE OF INDUSTRIAL WASTE.

Fee to be established.

SECTION 17B17A-4. SANITARY SEWER USER CHARGES.

The sanitary sewer users shall be charged and shall pay sanitary sewer user charges consisting of a sanitary sewer volume charge for sanitary sewer services and, wherever applicable, such surcharges, monthly service charges, and deduct meter charges as set forth in this article. The sanitary sewer volume charge shall be the volume of discharge into the Piedmont Sanitary Sewer System times the applicable sanitary sewer volume rate per thousand gallons for the user's customer class. In addition, users who are non-City water customers or whose discharge exceeds certain quality or composition standards shall be charged and shall pay surcharges as established in this Code.

PART 18

EARTH CHANGE AND STORM WATER DRAINAGE

ARTICLE I
GENERAL

Section 18-101. Regulatory.
Section 18-102. Definitions.
Section 18-103. Purpose.
Section 18-104. Scope.
Section 18-105. Violations.
Section 18-106. Fine not exclusive penalty.
Section 18-107. Impairment of drainage facilities.

DIVISION 2. ADMINISTRATIVE PROCEDURE.
Section 18-115. Processing by City Engineer.
Section 18-116. Variances and exception.
Section 18-117. Citizen complaint.

ARTICLE II
DRAINAGE AND SEDIMENTATION POLICIES AND STANDARDS

Section 18-201. Adoption.
Section 18-202. Design policies and standards.
Section 18-203. Regional detention systems.
Section 18-204. Title, ownership, and maintenance of detention and Drainage facilities.

ARTICLE III
DRAINAGE PLANS AND STUDIES

Section 18-301. Drainage plan required.
Section 18-302. Previously approved residential plats.
Section 18-303. Construction and approval of drainage facilities.
Section 18-304. Contents.

ARTICLE IV
EARTH CHANGE PERMIT

Section 18-401 Earth change permit required; not transferable.
Section 18-402 Conditions attached to earth change permit.
Section 18-403 Application for earth change permit; contents; duplication of information.
Section 18-404 Expiration; extension for additional year.
Section 18-405 As-built drawings.

Section 18-406 Policies.
Section 18-407 Exemptions.
Section 18-408 Notice of compliance.
Section 18-409 Revocation or suspension of earth change permit;

SECTION 18-101. REGULATORY.

This Part 18 of the Piedmont Code of Ordinances regulates changes in Storm Water Drainage whether by earth changes or subdivision of land into tracts for development.

SECTION 18-102. DEFINITIONS.

As used in this chapter, the following terms shall have the meanings respectively ascribed to them in this section:

(1) Accepted drainage study: An accepted drainage study, plan, or as-built drawing is defined as one for which all comments or issues raised by the city engineer during review have been resolved.

(2) Adverse effects: Shall generally be defined as effects that cause storm water to exceed the capacity of the drainage facilities and/or drainage easements as provided in the City Drainage Standards, or that cause damage, or an increase in damage, to property or facilities.

(3) Approval: The city council and/or planning commission may approve a final plat, final replat, minor subdivision, site plan, use permit, or development, and such final plat, final replat, minor subdivision, site plan, use permit or development shall be deemed accepted.

(4) Best Management Practices: The most effective, practical measures for reducing erosion and preventing sediment from leaving a site.

(5) City Drainage Standards: The criteria, standards and specifications for stormwater management, sediment and erosion control, and earth changes adopted by the City of Piedmont. The City Drainage Standards shall include all standards currently administered under the Flood Hazard Regulations, those standards contained in the Stormwater Criteria Manual, and any standards adopted as Best Management Practices.

(6) City engineer: The city engineer of the City of Piedmont or his authorized representative.

(7) Detention: The temporary storage and controlled release of stormwater runoff.

(8) Detention facility: A facility that provides temporary storage of stormwater runoff and controlled release of such runoff.

(9) Development: Any man-made change to improved or unimproved real estate, including but not limited to site preparation, buildings or other structures, mining, dredging, filling, grading, paving, excavation, or drilling operations.

(10) Drainage facilities: All elements necessary to store, control, and/or convey stormwater runoff. Said drainage facilities shall consist of both public and private storm sewers (closed conduits), channels, watercourses, sedimentation facilities, areas covered by restricted drainage easements for the purpose of providing overland flow, and all appurtenances to the foregoing, including inlets, manholes, junction boxes, headwalls, dissipaters, culverts, detention facilities, and the like.

(11) Drainage plan: Final construction details with sufficient information related to the proposed stormwater facilities for a site to allow determination that the facilities will function as designed in the final drainage study for the proposed site. These include, but are not limited to such information as pipe sizing, detention routing, staging, and storage, finished ground contours and elevations, and construction details and elevations for construction of proposed structures.

(12) Drainage study: Initial calculations used to determine the pre-development and post-development stormwater runoff rates for a development. The study must show the drainage basins, slopes, and runoff variables pertinent to the site. In the case of required detention, the proposed method of detaining increased flows shall be discussed. The stormwater contributions from off site areas must also be included in the study.

(13) Earth change: Excavating, grading, regrading, landfilling, berming, or diking of land within the jurisdictional area of the City of Piedmont.

(14) Final drainage study: [An additional stormwater runoff analysis of a development with the purpose of reducing stormwater runoff rates from the site after development.] Analysis of stormwater runoff under existing and proposed conditions, including analysis of proposed management measures prepared in accordance with the provisions of this chapter and the City Drainage Standards and incorporating all relevant elements of the final approved construction plans. For completed projects, the Final Drainage Study shall incorporate all relevant elements of the as-built plans.

(15) Flood: A temporary rise in the level of water which results in inundation of areas not ordinarily covered by water.

(16) Floodplain area: The area subject to flooding as designated on floodplain area maps or other more current information that delineates the 100 year floodplain as adopted by the City of Piedmont.

(17) Flood hazard regulations: The Flood Hazard Regulations as adopted and amended from time to time by the City of Piedmont and codified in the Piedmont Code of Ordinance, current edition.

(18) Jurisdictional area of the City of Piedmont: The jurisdictional area of the City of Piedmont includes all areas within city limits and all areas regulated by the City of Piedmont Subdivision Regulations.

(19) Natural: The cover and topography of land before any man-made change, or, in areas where there have already been man-made modifications, the state of the area and topography of land as of the date of the adoption of this chapter.

(20) Regional detention: Detention to control the various drainage basins defined in the stormwater management plan.

(21) Regulatory flood: A flood having a one percent chance of being equaled or exceeded in any given year based upon the full potential urbanization of the contributing watershed, considering the comprehensive plan, adopted floodplain management policies, and the watershed master drainage plan where adopted.

(22) Sedimentation facilities: Debris basins, sedimentation traps, berms, interceptor ditches, land terraces, hay bales, "silt fence," check dams, vegetation ground covers, and other means designed to control erosion and sedimentation.

(23) Stormwater criteria manual: The Drainage Policies, Criteria and Regulations adopted by resolution of the City of Piedmont, and any amendment, modification, or revision thereof.

(24) Stormwater management plan: A plan developed and adopted by the City of Piedmont which includes, but is not limited to: the establishment of drainage basins within the city's jurisdictional area, a listing of needed drainage improvements, and operational considerations to be implemented during flooding conditions. Also to be included, by reference, is any Creek Watershed Plan as developed and administered by the Soil Conservation Service.

(25) Watercourse: Any depression covered by stormwater and which gives direction to a current of stormwater where the drainage area above the same is five (5) acres or more in extent.

SECTION 18-103. PURPOSE.

This chapter is enacted for the purpose of protecting property and the general health, safety, and welfare of the residents of the City of Piedmont from the hazards and danger of flooding, the alteration of natural stormwater flow patterns, and associated erosion and sedimentation and inadequate or improper drainage by:

(a) Preventing:

(1) Increases in peak rates of stormwater runoff,

(2) Increases in flood levels,

(3) Blockage or impairment of capacity of existing drainage facilities,

(4) Damage as a result of changing "sheet flow" into concentrated channel flows,

(5) Degradation and/or sedimentation in watercourses and on property,

(6) Authorized work from being conducted in a manner hazardous to life or property or in a manner otherwise likely to create a public nuisance.

(b) Securing review and approval of the method of handling and disposing of stormwater runoff in the jurisdictional area of the City of Piedmont, and securing review, analysis, and approval by the appropriate authority of the design, construction, and maintenance of drainage facilities;

(c) Imposing standards and conditions upon the excavating, grading, regrading, landfilling, berming, and diking of land within the jurisdictional area of the City of Piedmont; and

(d) Providing a stormwater management fund, with the amounts deposited into that fund used for the design, construction, maintenance, and inspection of drainage facilities; the planning and study of methods to carry out the purposes of this chapter; and the review and approval of plans for handling stormwater runoff in the areas covered by this chapter.

SECTION 18-104. SCOPE.

The provision of this chapter shall apply to and be binding upon every person and every city, county, state, or federal governmental entity who seeks to develop, redevelop, grade, regrade, excavate, landfill, berm, or dike land within the jurisdictional area of the City of Piedmont.

SECTION 18-105. VIOLATIONS.

Any person, who violates any requirement of this chapter or the city drainage standards or any condition made pursuant thereto, other than discharge of stormwater, shall be guilty of an offense. The discharge of stormwater in violation of the provisions of this article or of any other ordinance of the City of Piedmont shall be an offense.

SECTION 18-106. FINE NOT EXCLUSIVE PENALTY.

In addition to a fine, the city may institute appropriate actions or proceedings at law or equity for the enforcement of the provisions of this chapter or the City Drainage Standards or to correct violations thereof, and, if applicable and appropriate, the city may institute appropriate actions or proceedings at law or in equity against any surety company, escrow holder, or any third party who has affirmatively acted as surety or guarantor for the faithful performance of the

permit holder's work.

SECTION 18-107. IMPAIRMENT OF DRAINAGE FACILITIES.

(a) Dumping or placing any material, whether temporary or permanent, within a drainage facility in a drainage easement or within the stormwater flowline of a drainage facility that is not in an easement is prohibited and a violation of this article. The owner of the property shall be responsible for any material that has been willfully dumped or placed in a drainage facility.

(b) A property owner's failure to repair and maintain a drainage facility that was specifically designed and installed to control stormwater runoff from that property or other properties designated in an approved drainage plan to a standard allowing it to perform its designed and intended purpose is prohibited and a violation of this article.

DIVISION 2. ADMINISTRATIVE PROCEDURE

SECTION 18-115. PROCESSING BY CITY ENGINEER.

(a) Within twenty (20) working days after receipt of a properly completed final drainage study or drainage plan, or within ten (10) working days after receipt of a properly completed earth change permit application, the city engineer shall review and then either accept, accept with conditions, or disapprove the submitted plan or permit application. Acceptance of a submitted final drainage study, drainage plan, or earth change permit by the city engineer shall not relieve the submitting engineer, the applicant, or the property owner of any responsibility for the design and such acceptance shall not waive any requirements of this chapter which are not specifically considered in the accepted plan. Drainage studies and plans which meet the requirements of this chapter and which conform to all requirements of the City Drainage Standards shall be accepted. Earth change permit applications which meet the standards established by this chapter shall be accepted. If a submitted drainage study, plan, or permit application is disapproved, the certifying engineer and applicant shall be advised in writing of the reasons for the disapproval.

(b) If the required findings cannot be made based upon the information contained in the submitted study, plan, or permit application, the general nature of such additional information required by the city engineer to make such determination shall be identified in writing. In the event that the information deficiency is of a technical nature, the city engineer may additionally request an engineering conference with the submitting engineer. Within ten (10) working days after receipt of such additional information as may be required by the city engineer, or as may be determined to be necessary during an engineering conference, a final decision shall be made by the city engineer to either accept, accept with conditions, or disapprove the submitted study, plan, or permit application. If the required information is not received within twenty (20) working days of the request for additional information by the city engineer the application

shall be treated as a new one. If disapproved, the submitting engineer and permit applicant shall be advised in writing and additional conference scheduled as appropriate.

(c) Major revisions (i.e. relocation of drainage basins, facilities, discharge points, etc.) to an accepted drainage plan or earth change permit shall require a new application. The city engineer may accept minor changes to a drainage plan or earth change permit. A decision regarding acceptance of minor changes shall be rendered in writing within ten (10) working days of receipt of such request.

SECTION 18-116. VARIANCES AND EXCEPTIONS.

Whenever the tract of land to be subdivided, developed or disturbed is of such unusual size or shape, or is surrounded by such development or unusual conditions that the strict application of the design requirements and specifications of this part of this Ordinance would result in substantial hardship, extreme difficulty, or injustice, the developer or land owner may submit to the City Engineer written justification and proof of such unusual conditions and a request for a variance or modification of the requirements of this Ordinance. The City Engineer shall make recommendations on whether to grant a variance or modification of the requirements of this Ordinance. In considering the request for a variance or modification the criteria for review shall be that if a variance or modification of this Ordinance is granted then the property may be developed or disturbed in a reasonable manner, but so, at the same time, the public welfare and interests of the City of Piedmont and its citizens are protected and the general intent of this Ordinance is preserved. The request for the variance shall be presented to the City Council of the City of Piedmont and a three-fourths (3/4) majority vote of the City Council shall be required to approve the variance or modification. The decision of the City Council on granting or denying the variance or modification shall be final.

SECTION 18-117. CITIZEN COMPLAINT.

Within five (5) working days of receipt of a complaint signed by a citizen in the jurisdictional area of the City of Piedmont that the provisions of this chapter are being violated, the city engineer shall make an investigation of the complaint and within ten (10) working days shall render a determination as to the validity of the complaint, take necessary action to insure the provisions of this chapter are being followed, and notify, in writing, the individual who filed the complaint of the action taken.

ARTICLE II

DRAINAGE AND SEDIMENTATION POLICIES AND STANDARDS

SECTION 18-201. ADOPTION.

The City Engineer shall prepare standards, where applicable, for drainage

facilities and best management practices which shall be known and cited as the "Piedmont Stormwater Drainage Standards, Criteria and Regulations". The City Drainage Standards or other standards approved and adopted by the city Council shall be followed by every person or governmental entity involved in development and/or in the construction, installation, and maintenance of drainage facilities. The City Drainage Standards as adopted may be amended from time to time in accordance with the procedure provided herein for their original adoption.

SECTION 18-202. DESIGN POLICIES AND STANDARDS.

(a) Drainage policies.

(1) The stormwater drainage system shall be designed to pass the peak stormwater run-off received from upstream and from the subject property for storms with durations up to twenty-four (24) hours and return periods of up to one hundred (100) years.

(2) All development, redevelopment, and earth changes shall be constructed so that it will not increase the frequency of flooding or the depth of flood flows for any storm, up to and including the 24 hour - 100 year storm.

(3) Peak flows shall not be increased at any location for any storm, up to and including the 24 hour - 100 year storm.

(4) Regulation of peak flows to allowable levels, as determined by subparagraphs (2) and (3) herein, shall be achieved by on-site or off-site storage and/or other water management facilities as provided in the City Drainage Standards.

(5) Subject to requirements for a drainage plan or earth change permit and of the City Drainage Standards, downstream conveyance may be improved or easements obtained for inundated areas to compensate for increased flow depths if such improvements comply with the policies of this chapter.

(6) All development, redevelopment, and earth changes shall be constructed so that it will not cause harm to other properties as a result of concentrating flows.

(7) On-site stormwater control may not be required for sites less than 2.5 acres in size if it is determined by the city engineer that stormwater runoff from the site will not cause adverse effects as described in this chapter. The city engineer may request that the applicant provide such information as required to make this determination.

(b) Erosion and sediment control policies.

(l) All development, redevelopment, and earth changes shall be designed, constructed and completed in a manner which minimizes the exposure of bare earth to precipitation.

(2) All development, redevelopment, and earth changes shall be constructed

only if appropriate sedimentation facilities are installed and maintained throughout the construction period.

(3) All development, redevelopment, and earth changes shall be accompanied by Best Management Practices for controlling sediment and erosion so as to minimize the amount of sediment leaving the site.

(c) Standards.

(1) Requirements and design standards for all components of drainage facilities shall be established by the City Drainage Standards.

(2) The City Drainage Standards shall govern all earth changes, drainage plans, excavating, grading, regrading, revegetation, landfilling, berming, and diking of land within the jurisdictional area of the City of Piedmont and shall specifically regulate the following considerations:

a. The City Drainage Standards shall regulate the design, installation, utilization and removal of all temporary and permanent drainage facilities and best management practices; and

b. The City Drainage Standards shall regulate the placement and compaction of fill material.

SECTION 18-203. REGIONAL DETENTION SYSTEMS.

(a) Regional detention systems may be permitted and are recognized as one of the preferred methods of providing stormwater control. These systems may be designed to control the fully urbanized flows so as to permit the maximum use by developments in lieu of constructing small, on-site detention.

(b) The city council may accept cash payments for such detention systems in lieu of requiring on-site detention. Cash payments must be in an amount equal to the estimated cost of providing on-site stormwater control and must be made prior to the start of any construction or earth changing operations. Any moneys received under this provision must be placed in the stormwater management fund.

(c) The option of accepting cash payments for regional detention may be made available to sites of any size. However, the option is available only when a regional detention facility is in place or scheduled for construction in the immediate future that will support the detention requirements of the proposed site.

(d) If it is determined by the city engineer that stormwater runoff from the site will cause adverse effects as described in this chapter, the site shall not be eligible for the cash payment option. The city engineer may request that the applicant provide such information as required to make this determination.

SECTION 18-204. TITLE, OWNERSHIP, AND MAINTENANCE OF DETENTION AND DRAINAGE FACILITIES.

Public or private title, ownership and maintenance of detention and drainage facilities required herein shall be determined by criteria established by and contained in the City Drainage Standards. Regional detention systems shall be owned, maintained and operated by the City of Piedmont.

ARTICLE III

DRAINAGE PLANS AND STUDIES

SECTION 18-301. DRAINAGE PLAN REQUIRED.

(a) A drainage plan prepared in accordance with the provisions of this chapter may be submitted to and accepted by the city engineer prior to the approval of any final plat, final replat of any subdivision of land, prior to the approval by the Piedmont Planning Commission of any minor subdivision, prior to the issuance of any building permit, or prior to the approval of any development.

(b) At application for review of any item that may require a drainage plan, a drainage study shall be submitted to the city engineer. If the drainage study shows that no increase in peak stormwater flows will result from the development, the city engineer may waive the requirement for a final drainage study and a drainage plan. Drainage studies shall contain adequate information and calculations to demonstrate the validity of the conclusions being made and that they are in compliance with the City Drainage Standards. A drainage study shall be formulated under the direct supervision and sealed by a registered professional engineer licensed by the State of Oklahoma.

(c) One week prior to review at a public meeting by the planning commission, a final drainage study must have been submitted to the city engineer.

(d) A final drainage study prepared in accordance with the provisions of this chapter shall be reviewed and accepted by the city engineer prior to approval by the planning commission of any preliminary plat of any subdivision of land, and prior to the approval by the city council of any final plat or final replat of any subdivision of land, development, site plan, or use permit.

(e) Upon approval by the city council and/or the planning commission of any item that requires a drainage plan, a revised final drainage study that reflects any special conditions of the city council and/or the planning commission approval shall be submitted and accepted.

(f) A drainage plan accepted by the city engineer is a prerequisite to the issuance of a building permit.

SECTION 18-302. PREVIOUSLY APPROVED RESIDENTIAL PLATS.

Under the following circumstances, the development of a final residential plat shall not have to be redesigned for drainage:

(1) Any subdivision for which a final plat was approved prior to December, 2010, and

(2) The development of said subdivision is being accomplished with the same general use as originally intended when approval was granted for the final plat, and

Nothing in this section shall be construed to relieve a developer of property from obligations under any other laws, including but not limited to the Oklahoma Stormwater Act.

SECTION 18-303. CONSTRUCTION AND APPROVAL OF DRAINAGE FACILITIES.

(a) All drainage facilities shown as part of an accepted drainage plan for any portion of a development shall be installed as a part of the first phase of construction or earth moving activity on that portion of the development. If only a portion of the drainage facilities are installed on any development due to phased construction of the development, these facilities shall be constructed to function in such a manner as to be consistent with the purpose of this chapter. The use of temporary drainage facilities may be permitted so long as they function in such a manner as to be consistent with the purpose of this chapter and that they are replaced with permanent drainage facilities prior to occupancy or use of the development. Minor deviations from the requirement for installing the drainage facilities as a part of the first phase of construction or earth moving activity may be granted by the city engineer if deemed necessary for technical reasons related to the construction as long as the purpose of this chapter is met.

(b) As-built drawings. As-built drawings shall be prepared and sealed by a professional engineer registered in the State of Oklahoma and shall be submitted to the city engineer upon completion of the construction of the final drainage plan. As-built drawings shall clearly show any changes from the accepted final drainage plan. The as-built drawings shall be reviewed by the city engineer. If the submitted "as-built" drawings cannot be accepted, the certifying engineer and applicant shall be advised in writing of the reasons for their disapproval. "As-built" drawings must be accepted prior to the issuance of a certificate of occupancy and the use or occupancy of a site, development, or other improvement.

(c) Maintenance bond. Before acceptance by the city council of any public improvement for city maintenance, a maintenance bond for the total cost of the improvement and for a period of one year shall be filed with the city clerk to ensure the correction of any defect in materials or workmanship that may be found in the improvement.

SECTION 18-304. CONTENTS.

(a) General requirements. All final drainage studies shall be formulated under the direct supervision of a registered professional engineer licensed by the State of Oklahoma. Studies submitted for final acceptance shall be accompanied by payment of a fee in accordance with the schedule approved by the city council

and contained in the City Drainage Standards, and bear the signature and seal of the submitting engineer and, additionally, the following statement shall immediately precede the signature and seal of the submitting engineer:

"I hereby certify that I am familiar with the adopted ordinances and regulations of the City of Piedmont governing drainage facilities; that this final drainage study has been prepared under my direct engineering supervision; and that the above and foregoing final drainage study complies with all governing ordinances and the adopted drainage standards of the City of Piedmont pertaining to drainage facilities to the best of my knowledge, information and belief."

(b) All final drainage plans shall be formulated under the direct supervision of a registered professional engineer licensed by the State of Oklahoma. Plans submitted for final acceptance shall bear the signature and seal of the submitting engineer and, additionally, the following statement shall immediately precede the signature and seal of the submitting engineer:

"I hereby certify that I am familiar with the adopted ordinances and regulations of the City of Piedmont governing drainage facilities; that the final drainage plan has been prepared under my direct engineering supervision; and that the above and foregoing final drainage plan complies with all governing ordinances and the adopted drainage standards of the City of Piedmont pertaining to drainage facilities to the best of my knowledge, information and belief."

Following the signature and seal of the submitting engineer, the drainage plan shall bear the name, address, phone number, and signature of the owner which shall be subscribed below the following statement:

"I (We) hereby certify that the accepted drainage plan will be implemented as designed and "as-built" drawings prepared of the completed drainage facilities under the general supervision of a professional engineer licensed by the State of Oklahoma. I (We) further certify that I am (we are) aware of my (our) responsibilities as the owner(s) of record for this piece of property, and that I (we) may be held personally (corporately) liable for any violations on this property resulting from the failure to comply with the provisions of the adopted ordinances and regulations of the City of Piedmont governing drainage facilities. Said provisions include, but are not limited to, responsibilities for proper construction, construction procedures and maintenance of the drainage facilities upon completion."

In the case of property owned by a corporation, the statement shall use the parenthetical language and the owners information shall also include the title of the authorized person signing the owners certification and a notarized corporate seal.

(c) Final drainage study elements. A drainage study shall consist of text statements, engineering drawings, contour maps, and all supporting engineering drawings, supporting contour maps, and supporting engineering calculations applicable to the land area covered by the study and which are required to demonstrate full compliance with the requirements of this chapter and the City

Drainage Standards. A study shall include all pertinent information required by the city engineer and may include, but shall not be limited to, any or all of the following elements:

(1) An engineering report showing compliance with the applicable provisions of this chapter and the City Drainage Standards, clearly detailing the scope of the engineering problem and the proposed solutions;

(2) An engineering hydrologic analysis of stormwater runoff under existing site conditions and under proposed developed site conditions;

(3) A detailed evaluation of the projected effects on property adjoining the site and on existing drainage facilities and systems both on and off the site;

(4) The location of all existing and planned temporary and permanent drainage facilities;

(5) The on-site regulatory flood elevations and the boundaries of any floodplain area. In every instance, the plan shall include a determination of the area required to carry the regulatory flood;

(6) The proposed method of handling all runoff from the development and demonstrated capability to handle the pass-through of upstream runoff;

(7) Proposed fill or other structure-elevating techniques, levees, channel modifications, and detention facilities;

(8) The location and size of all existing and proposed drainage easements and areas; and

(9) The location, size, character, and estimated effectiveness of all temporary and permanent erosion and sedimentation control facilities with specifications detailing all on-site erosion control measures which will be established and maintained during all periods of development and construction. An outline of the sequence of construction activities shall be provided that notes when the various aspects of the drainage study will be implemented.

ARTICLE IV

EARTH CHANGE PERMIT

SECTION 18-401. EARTH CHANGE PERMIT REQUIRED; NOT TRANSFERABLE.

Unless specifically exempted, an earth change permit granted to the provisions of this chapter shall be obtained from the city prior to the commencement of any excavating, grading, regrading, landfilling, berming, or diking of any property within the jurisdictional area of the City of Piedmont. A separate permit shall be required for each separate, noncontiguous site or lot.

No permit shall be transferable without the prior written consent of the city engineer

SECTION 18-402. CONDITIONS ATTACHED TO EARTH CHANGE PERMIT.

Prior to granting any earth change permit, the city engineer shall attach such conditions thereto as deemed reasonable and necessary in order to comply with the purpose, policies, and standards of this chapter. Such conditions may include, but shall not be limited to: Submission of a drainage plan; specified finished grade, or land contours; mandatory installation of drainage facilities; specified erosion and sediment control measures; furnishing any necessary public easements; and a specified method and sequence for performing the work thereby authorized.

SECTION 18-403. APPLICATION FOR EARTH CHANGE PERMIT; CONTENTS; DUPLICATION OF INFORMATION.

(a) General requirements. Unless exempted by the provisions of section 18-46 of this chapter, any person desiring to effect an earth change shall file a written application for an earth change permit with the city engineer. Any area affected by the earth change and within the jurisdictional area of the City of Piedmont must be included in the permit application. Applications shall be in such form and content as the city engineer shall establish, and shall be accompanied by the payment of a permit fee in accordance with the fee schedule adopted by the city council. The site plan and design standards established by the applicant and approved by the city engineer, or imposed by the city engineer, shall become conditions upon which the earth change permit is issued. No change in an accepted plan or design standard shall be made without prior written approval of the city engineer.

(b) Contents of permit application. Each earth change permit application shall contain the following information:

(1) The name and address of the legal owner of the property for which the permit is requested;

(2) A vicinity sketch and boundary line survey of the site for which the permit is requested, including a legal description of such property;

(3) Site drawings indicating each separate land area to be excavated, filled, graded, or leveled, the finished depth of each separate land cut or fill, the present and future (as completed) points of entry and discharge for surface water on the subject property, and identification of all temporary or permanent structures or other devices to be erected or established for the purpose of controlling or regulating surface water, erosion and sedimentation on such property;

(4) The applicant's plans for controlling on-site erosion and off-site sedimentation for the purpose of preventing the deposit of sediment from the lot or tract under application upon any other off-site public or private property or watercourse during all phases of project construction; and

(5) The applicant's plans for receipt of surface water on the property under

consideration and discharge of surface water from this property during periods of construction, and a statement specifying the anticipated time period for the completion of all drainage improvements.

If the city engineer is unable to determine from the application submitted that it meets the policies and standards governing the issuance of the requested permit, the city engineer shall request the applicant in writing to furnish such additional information which may be essential to such determination.

(c) Duplication of information. No applicant for an earth change permit shall be required to resubmit any documents, drawings, or other information which was previously submitted by such applicant in conjunction with the processing of any drainage plan previously accepted by the city engineer.

SECTION 18-404. EXPIRATION; EXTENSION FOR ADDITIONAL YEAR.

An earth change permit shall expire one year after the date it is issued. Earth change permits may be extended for an additional year following review by the city engineer.

SECTION 18-405. AS-BUILT DRAWINGS.

(a) As-built drawings, clearly showing any changes from the approved earth change permit, shall be submitted to the city engineer upon completion of construction of the earth change. The as-built drawings shall be reviewed by the city engineer. If the submitted "as-built" drawings cannot be accepted, the applicant and certifying engineer if one was used to obtain the permit, shall be advised in writing of the reasons for their disapproval. "As-built" drawings must be accepted prior to the issuance of a certificate of occupancy and the use or occupancy of a site, development, or other improvement.

(b) The city engineer may waive the requirement for as-built drawings on minor, residential projects. However, such a waiver shall not relieve the applicant from the responsibility of completing the earth change in accordance with the accepted earth change permit.

SECTION 18-406. POLICIES.

The issuance of earth change permits shall be governed by the following policies of the city:

(a) No earth change shall be permitted which creates a public hazard upon any property within the city through the obstruction, impairment, sedimentation, blockage or alteration of any drainage facility.

(b) No earth change shall be permitted which will channelize, obstruct, or impede any watercourse in a manner which is inconsistent with the provisions of this chapter, accepted best management practices and/or the City Drainage Standards.

(c) No earth change shall be permitted which will impede the authorized use of a utility easement.

(d) All earth changes shall be designed, constructed and completed in a manner which minimizes erosion and loss of sediment from the site.

(e) Earth moving activity on individual tracts or lots shall be conducted only if appropriate sedimentation facilities are installed as the first step in the earth moving process and continually maintained throughout the construction period in accordance with the City Drainage Standards.

(f) As may be applicable to any lot, parcel, or tract of land for which an accepted drainage plan exists, the requirements and conditions of the drainage plan shall be incorporated as a condition to the issuance of any earth change permit.

SECTION 18-407. EXEMPTIONS.

An earth change permit shall not be required for the following activities:

(1) Bona fide agricultural and farming operations which constitute the principal use of any lot or tract of ground in the jurisdictional area of the City of Piedmont and which meet the requirements of the zoning code of the city.

(2) Customary and incidental routine grounds maintenance, landscaping, and home gardening which does not require a zoning use exception, a zoning variance, or a building permit, and which does not affect stormwater drainage entering or leaving any private property or public right-of-way, utility easement, or drainage easement.

(3) Excavating and/or grading, and/or leveling, and/or landfilling of any lot or tract of record whose size does not exceed one (1) acre and does not contain any floodplain area, natural or man-made watercourse, or drainage easements.

(4) Emergency repairs of a temporary nature made on public or private property which are necessary for the preservation of life, health or property, and which are made under such circumstances where it would be impossible or impracticable to obtain an earth change permit.

(5) Earth moving for the purpose of installing, maintaining, or repairing any drainage facility, public street, public utility facility, or any service lines related thereto; however, such operations must be accompanied by sufficient use of best management practices that will insure minimal loss of sediment from the affected area.

SECTION 18-408. NOTICE OF NONCOMPLIANCE.

If at any time an earth change is performed which is not in accordance with this chapter or an earth change permit, including all conditions and accepted modifications thereof, a written notice of noncompliance shall be given by the city

stating the nature and location of the alleged noncompliance, and specifying what remedial steps are necessary to bring the project into compliance. The responsible parties shall have such time as may be allowed in writing by the city code enforcement officer to correct all noted deficiencies. The time allowed shall be reasonable, and shall be determined by the nature of the deficiency and whether or not it creates a nuisance or hazard. If the deficiency is not corrected to the satisfaction of the city at the expiration of the time allowance, then all, or portions of, the construction activity on the site may be stopped in accordance with section 18-48 of this chapter.

SECTION 18-409. REVOCATION OR SUSPENSION OF EARTH CHANGE PERMIT; STOP WORK ORDER; NOTICES.

(a) An earth change permit may be revoked or suspended by the city engineer upon the occurrence of any one of the following events:

(1) Violation of any condition of the permit; or

(2) Violation of any provision of this chapter or any other applicable law, ordinance, rule or regulation pertaining to the earth change permit; or

(3) Existence of any condition or the doing of any act constituting or creating a nuisance, hazard, or endangering human life or property of others; or Failure to bring the permitted area into compliance within the time allowed on a notice of noncompliance previously issued.

(b) Upon the revocation of an earth change permit, the city engineer shall issue a stop-work order on all or part of the construction activity on the permit holder's property which may be directly or indirectly related to site drainage and which is being performed pursuant to any permits, licenses, franchises or contracts issued or approved by the city. Such order may require a work stoppage on all construction activity on buildings or structures and all appurtenances thereto, including building, electrical, plumbing, mechanical, street work, storm sewers, sanitary sewers, gas lines, and all utilities including gas, electric, telephone, and cable television.

(c) Notices and orders required by this section shall be served upon the parties concerned, either personally or by certified mail, addressed to the individual contracting party or parties and permit holder at the address given on the contract document or permit application filed with the city.

(d) The city may reinstate the earth change permit upon determination that the permitted area is in compliance with all applicable stormwater management and earth change requirements.

(e) Rulings of the city engineer may be appealed in writing to the board of drainage appeals. The board of drainage appeals must hold a public hearing within twenty (20) days of receipt of an appeal. After the public hearing, the board of drainage appeals may reinstate the permit stating under what conditions the reinstatement is valid.

PIEDMONT CODE OF ORDINANCES
2013 SUPPLEMENT NO. 6

APPENDIX INDEX

APPENDIX 10 **General ordinances not codified**

Ordinance No. 569	Electricity Franchise
Ordinance No. 577	USDA-RBEG-Revolving Loan Fund
Ordinance No. 583	Retirement System
Ordinance No. 584	Retirement System
Ordinance No. ___	Adopting and Enacting Code of Ordinances

PIEDMONT CODE OF ORDINANCES
2010 SUPPLEMENT NO. 5

APPENDIX INDEX

1. **Resolution No. 5/24/2010A Adopting Revised City Council Rules**

2. **Resolution No. 10/25/2010C Adopting Standards and Specifications for Construction of Public Improvements**

3. **Resolution NO. 9/27/2010A Adopting Piedmont Standards and Criteria for Storm Water Management**

4. **Ordinance Disposition Table 2010**

RESOLUTION NO. 5/24/2010A

A RESOLUTION OF THE CITY COUNCIL OF THE CITY OF PIEDMONT, OKLAHOMA, ADOPTING REVISED CITY COUNCIL RULES BY AMENDING PROCEDURES FOR COUNCIL MEETINGS; PROVIDING FOR CONDUCT OF MEETINGS, VOTING AND DISCUSSION RULES, PUBLIC HEARINGS, HEARING OF CITIZENS, RULES OF DISCUSSION, COMMITTEE ORGANIZATION AND MEMBERSHIP, ADOPTION, SUSPENSION AND AMENDMENT OF RULES, EHTICS, DECORUM, AGENDA ORGANIZATION, ORDER OF BUSINESS, AND GENERAL RULES AND PRINCIPLES FOR CONDUCT OF MEETINGS.

WHEREAS, the City Council of the City of Piedmont Oklahoma, deems it necessary to amend its rules and procedures.

NOW, THEREFORE, BE IT RESOLVED by the City Council of the City of Piedmont, Oklahoma, that the Council Rules hereafter set forth are adopted effective immediately.

PIEDMONT CITY COUNCIL RULES

Section 1: Governing Procedure

The following provisions, ~~unless modified by subsequent ordinance consistent herewith,~~ shall govern the conduct of all regular, special and emergency meetings of the City Council. The Presiding Officer and the Parliamentarian may refer to Roberts Rules of Order as a parliamentary reference tool but Roberts Rules are advisory only.

Section 2: City Attorney to be the Parliamentarian

The City Attorney shall be the Parliamentarian, and shall advise the Presiding Officer on any questions of order.

Section 3: General Decorum

Presiding Officer – The Mayor, or Mayor Pro-Tem, shall serve as the Presiding Officer and shall preserve decorum and decide all points of order, subject to appeal to the Council.

Council Members shall preserve order and decorum during Council meetings, and shall not, by conversation or other action, delay or interrupt the proceedings or refuse to obey the orders of the Presiding Officer or these Rules.

(a) Councilors shall, when addressing staff or members of the public, confine themselves to questions or issues then under discussion, shall not engage in personal attacks shall not impugn the motives of any speaker or Councilor, shall at all times, while in session or otherwise conduct themselves in a manner appropriate to the dignity of their office.

(b) A City Council Member desiring to speak shall address the Presiding Officer and, upon recognition by the Presiding Officer, shall confine discussion to the question under debate, avoid discussion of personalities and indecorous language, and refrain from personal attacks and verbal abuse.

(c) A City Council Member desiring to question the administrative staff upon recognition from the chair shall address questions to the City Manager who shall be entitled either to answer the inquiries or to designate some member of City staff for that purpose. City Council Members shall not berate nor admonish staff members.

(d) A City Council Member, once recognized, shall not be interrupted while speaking unless called to order by the Presiding Officer, unless a point of order is raised by another member, or unless the speaker chooses to yield to questions from another member. If a City Council Member is called to order while speaking, that member shall cease speaking immediately until the question of order is determined. If ruled to be in order, the member shall be permitted to proceed. If ruled to be not in order, the member shall remain silent or make additional remarks so as to comply with rules of the City Council.

Staff and Public – Members of the administrative staff, employees of the City and other persons attending Council meetings shall observe the same rules of procedure, decorum and good conduct applicable to the members of the Council.

(a) Although the Presiding Officer has the authority to preserve decorum in meetings, the City Manager also is responsible for the orderly conduct and decorum of all City employees under the City Manager's direction and control.

(b) The City Manager shall take such disciplinary action as may be necessary to ensure that decorum is preserved at all times by City employees in City Council meetings.

(c) All persons addressing the City Council, including the City Manager, other staff members, or members of the public shall be recognized by the presiding officer and shall limit their remarks to the matter under discussion and adhere to time regulations set forth in these Rules.

(d) No staff member, other than the staff member having the floor, shall enter into any discussion either directly or indirectly without permission of the presiding officer.

(e) Everyone attending the meeting will refrain from private conversations while the City Council is in session.

(f) Citizens and other visitors attending City Council meetings shall observe the same rules of propriety, decorum and good conduct applicable to members of the City Council. Any person making personal, impertinent, profane or slanderous remarks or who becomes boisterous while addressing the City Council or while attending the City Council meeting shall be removed from the room if the sergeant-at-arms is so directed by the presiding officer, and the person shall be barred from further audience before the city council during that session of the City Council.

Sergeant-at-Arms – The Police Chief of the City of Piedmont shall serve as the Sergeant-at-Arms. In the absence of the Police Chief the City Manager shall designate the Sergeant-at-Arms.

Enforcement of Decorum – The Sergeant-at-Arms shall carry out all orders and instructions given by the Presiding Officer for the purpose of maintaining order and decorum.

Section 4: Agenda

The agenda shall be a listing by topic of subjects to be considered by the City Council, and shall be delivered to members of the City Council in advance of each meeting in accordance with the directives of the City Council.

(a) The Mayor shall determine the contents of the agenda relating to policy items.

(b) The *City* Clerk ~~of the Council~~ shall prepare an agenda for every regular meeting, and, if requested by the Presiding Officer, for every special meeting. Agendas and informational material for Regular Meetings shall be distributed to the Council and City Attorney no later than the Friday next preceding the meeting. No Council approval shall be required for an agenda of any regular meeting.

(c) Placement of Items on the Agenda.

(1) The City Manager may place routine items and items referred by staff on the agenda without Council action.

(2) Any item placed on the consent docket may upon the request of any member be subject to individual consideration.

(d) Any Council Member wishing to place an item on the agenda may do so through written or verbal request to the Mayor. Should the Mayor deny the request the item may be placed on the agenda through a written request to the City Manager containing signatures from two members of the City Council.

(e) Upon receipt of all items for the agenda the City Manager shall determine if all items could reasonably be accomplished in a regular Council meeting prior to 10:00 p.m. In the event the number of items to be considered appears to exceed a normal meeting, any item(s) which would not adversely affect the public or City operations by being placed on a later agenda may be removed by the City Manager upon counsel with the Mayor and deferred to a later meeting.

Section: 5: Order of Business

All meetings, regular, special and emergency, except executive sessions as authorized by law, shall be open to the public.

(a) No person shall be barred unless the person is disorderly or refuses to obey the lawful order of the Mayor, or Mayor Pro-Tem , or temporary chairperson upon the event of absence of either the Mayor or Vice-Mayor, who may order the Chief of Police or any attending police officer to eject any person deemed by the Chair to be in violation of these rules.

(b) Promptly at the hour set by law on the day of each regular, special or emergency meeting, the members of the City Council, the City Manager, the City Clerk and the City Attorney shall take their regular stations in the Council chambers and the business of the City Council shall be taken up for consideration and disposition in the following order:

(1) Call to order
(2) Flag salute
(3) Invocation
(4) Roll call
(5) Approval of consent docket including minutes of previous meetings and claims
(6) Proclamations and awards
(7) Hearing of Citizens
(8) Public hearing items
(9) Consideration and unfinished business from previous meeting
(10) Introduction and adoption of resolutions and ordinances
(11) Consideration of petitions, contracts and communications
(12) New business
(13) Report of officers, boards, committees, City Attorney and City Manager
(14) Council comments and suggestions

(15) Adjournment

(c) The order of disposition of the matters to be taken up for consideration by the Council may be rearranged by the direction of the presiding officer.

Section 6: Hearing of Citizens

Public comment on items not listed on the meeting's agenda will have a cumulative maximum time limit of twenty minutes, unless a majority of Council Members present vote to extend the time.

(a) Persons wishing to speak during public comment must fill out a "Speaker's Form" with the person's name and address and the topic upon which the person wishes to speak, not later than the end of the opening exercises. Speaker's Forms must be turned into the City Clerk. The Presiding Officer shall inform the audience of the requirement to sign up to speak immediately after the pledge of allegiance.

(b) If a member of the public wishes to speak on an item that is scheduled for a public hearing at that same meeting, the speaker shall wait until that public hearing. Public comment shall not be used to testify on an item that is not a public matter or to testify on a matter after the official record has been closed on any matter which has been the subject of a public hearing.

(c) Speakers are limited to three minutes, unless a majority of Council Members present vote to extend the time. No persons will be allowed to submit a "Speaker's Form" after the period for public comment has started.

(d) Should there be more speakers than can be heard for three minutes each during the twenty minute period provided for public comment, the Presiding Officer shall sort the requests to speak in order to afford the greatest opportunity for each topic to be heard. The Presiding Officer may adjust allotment of time to afford the maximum number of citizens the opportunity to speak..

(e) Councilors may, after obtaining the floor, ask questions of speakers during public comment. Councilors shall use restraint when exercising this option, and shall attempt to limit questioning to no more than three minutes. The Presiding Officer may intervene if a Councilor is violating the spirit of this guideline.

Section 7: Public Hearings

(a) Persons wishing to speak must submit a "Speaker's Form" with the person's name and address prior to the commencement of the public hearing at which the person wishes to speak. The Presiding Officer shall inform the audience of this requirement to sign up at the beginning of the meeting and immediately prior to the commencement of a public hearing.

(b) Except as otherwise provided in these rules, speakers will be limited to three minutes unless a majority of the councilors present vote to extend the time. Councilors may, after recognition by the Presiding Officer, ask clarifying or follow up questions of individuals providing testimony after that individual has completed his or her testimony. Questions posed by City Councilors should be to provide clarification or additional information on testimony provided. Questions should not be used as an attempt to lengthen or expand the testimony of the individual. Councilors shall be expected to use restraint and be considerate of the meeting time of the Council when exercising this option. The Presiding Officer may intervene if a Councilor is violating the spirit of this guideline. At the end of the Public Hearing, each member of the Council has the opportunity to comment on or discuss testimony given during the Public Hearing.

(c) The Presiding Officer may exclude or limit cumulative, repetitious, or immaterial matter. The Presiding Officer may order the testimony, alternating those speaking in favor and those in opposition, or having all speaking in favor testifying, followed by all those in opposition. The Presiding

Officer may further limit the time and/or number of speakers at any public hearing; provided that the Presiding Officer shall announce any such restrictions prior to the commencement of the testimony. In the event of large numbers of interested persons appearing to testify, the Presiding Officer, to expedite the hearing, may in lieu of testimony call for those in favor of the pending proposal or those in opposition to rise and direct the Clerk of the Council to note the numbers in the minutes.

Section 8: Reading of the Minutes

Unless the reading of the minutes of a Council meeting is requested by a member of the Council, the minutes may be approved without reading if the City Clerk has previously furnished each member with a *copy* ~~synopsis~~ thereof.

Section 9: Rules of Discussion

(a) The Presiding Officer may move, second, and discuss any item from the chair, subject only to the limitations of discussion as are by these rules imposed on all members and shall not be deprived of any of the rights and privileges of a Council Member by reason of acting as the presiding officer with the sole exception of casting a vote other than to break a tie vote. ~~of members present~~.

(b) Every member desiring to speak shall address the chair and request the floor, the member shall not proceed with the member's remarks until named and recognized by the Presiding Officer. If any member is speaking, or otherwise transgresses the rules of the City Council, the Presiding Officer shall call the person to order, and the member called to order should immediately cease, unless permitted to explain, and the Council, if appealed to, shall decide without discussion.

(1) If the decision be in favor of the member called to order, he or she shall be at liberty to proceed. If against him or her and the case requires, he or she shall be liable to the censure of the Council.

(c) No person shall speak more than twice on the same question unless permitted by the Council.

(d) No member of the Council shall leave his or her seat to speak to any other member of the Council or any other person in the Council Chamber without first obtaining permission of the ***Presiding Officer*** ~~Mayor~~.

(e) When the City Council is in session, or when a member is speaking, or the City Clerk, Manager or Attorney is reading any paper to or speaking to the City Council, no member shall, in any way, disturb the proceedings of the Council. No members of the Council shall, at any time in addressing any meetings thereof, indulge in any personalities or indecorous language or in any matters or things not pertaining to the subject under discussion.

(f) The right of the floor of the Council shall be accorded only to the members of the Council and to the appointive officers of the City unless otherwise provided for herein.

(g) A Council member moving for the adoption of an ordinance or resolution shall have the privilege of closing the discussion thereon unless by a majority vote of the members present at the meeting the Council decides to extend discussion for a time certain. In all other cases, the closing of discussion shall be governed by the presiding official unless, by majority vote of the members present at the meeting, the Council decides to extend discussion for a time certain.

(h) A motion to reconsider may be made either immediately during the same session or at a recessed and reconvened session thereof only. The motion shall take precedence over all other motions and it shall be debatable.

(i) Any Council member may request, through the presiding official, the privilege of having an abstract of his or her statement on any subject under consideration by the Council entered in the minutes. If the Council consents thereto, the statement shall be entered in the minutes.

(j) By City Charter an abstention from voting by a Council Member shall not be recorded as a no vote but shall be reflected in the minutes as an abstention and not counted in determining whether an item passes or fails. A Council Member may withdraw an abstaining vote and cast his or her vote for or against the original matter on which the abstaining vote was cast only where the changed vote is announced publicly by the abstaining council member prior to adjournment of the meeting where the abstaining vote occurred. Upon the timely announcement of a change in the abstaining vote the changed vote shall be counted, recorded and added to the tally of the original vote as either for or against the original measure or action.

(k) When a question before the Council contains several propositions, any member may call for a division of the question so as to vote on each proposition separately. Unless the request for division is made, after preliminary discussion of an agenda item, the Presiding Officer shall, consistent with these rules, call the matter for determination by the Council. Subsequent to the Presiding Officer calling the matter for determination, the procedure shall be as follows:

(1) *Main motion.*

(a) Any member of the Council desiring to offer a motion on a particular agenda item shall so indicate by addressing the Chair to obtain the Presiding Officer's recognition. Subsequent to the Presiding Officer recognizing the member, the member will thereupon, in clear and concise terms, move to:

1. Continue the matter until a specific date;
2. Table the matter indefinitely;
3. To take a certain course of action;
4. Approve for award a bid pending review of bid by staff, the signing of the contract and furnishing the required bond;
5. Approve reading of an ordinance by title only;
6. Approval of an ordinance and that the reading of the ordinance be waived;
7. Adopt a resolution;
8. Approve or reject the request for; or
9. Approve consent agenda.

(b) These are exemplary only and not intended to list all possible main motions.

(l) Thereafter, members desiring to second the motion shall so indicate by addressing the Presiding Officer and upon recognition saying," I second the motion." Subsequent to the main motion receiving a second and following any discussion, the Presiding Officer shall call for a vote. In all cases, the member making the motion, the member seconding the motion and the vote of the members thereon shall be entered in the minutes of the Council.

(m) If no member offers a motion on an agenda item, the Presiding Officer shall again call for motions. If no motion is presented after the second calling, the Presiding Officer shall declare the item failed for lack of motion. Similarly, if no one seconds another member's motion, the Presiding Officer shall, after calling twice therefore, declare that the motion failed for lack of a second.

(n) Anytime prior to the Presiding Officer's calling for vote of the Council, a member may move to amend the motion, which shall require a second. An amendment must be germane to the main motion.

(2) *Procedural motions.*

(a) In addition to main motions, Council members may offer certain procedural motions which take precedence over the main motion and are not subject to discussion. The procedural motions also require a second from a Council member to proceed with the procedural motions.

(b) A non-exclusive list of exemplary procedural motions are:

1. Amend main motion;
2. Extend limit or close time for discussion;
3. Call for the question;
4. Recess or adjournment;
5. Appeal Mayor's call to order;
6. Division of motion into parts;
7. Table; and
8. Other motions pertaining to the disposition of main motions or dealing with rules of conduct at the meeting.

(o) An item previously decided by the City Council may be placed on the agenda as a new item of business only under the following circumstances:

(1) When the vote by the City Council occurred at least six months before the item again appears on the agenda;

(2) When an item deals with any matters dealing with initiation, prosecution, defense or settlement of litigation brought by or against the City, its employees or agencies; and/or

(3) When a majority of the members of the City Council present at a Council meeting direct the item to be placed on the agenda.

Section 10: Committees

(a) The Mayor shall create, abolish, and establish the jurisdiction of all committees and subcommittees, in accordance with applicable law and the City Charter. All chairs, vice-chairs, and members of committees and subcommittees serve at the pleasure of the Mayor.

(b) The Mayor shall appoint members of all standing committees, with Council confirmation.

(c) The Mayor shall appoint all special committees and joint committees as the Mayor determines to be necessary.

(d) The Mayor shall be an ex officio non-voting member of all standing and special committees.

(e) The Mayor shall appoint City Council members permanently or temporarily to any standing or special committee. That member will serve on said committee at the pleasure of the Mayor.

Section 11: Adoption, Suspension and Amendment of Rules

(a) Except as otherwise provided by the Piedmont City Charter, any provision of these rules may be temporarily suspended by a majority vote of the Councilors present. The vote on any such suspension shall be taken by ayes and nays and entered upon the record.

(b) These rules may be amended, or new rules adopted, by a vote of two-thirds of the Councilors present. ~~provided that the proposed amendments or new rules have been introduced into the record~~

~~at a prior Council meeting not less than ten days prior to Council action on the proposed amendment or adoption.~~

~~(c) Council Rules must be readopted at the next meeting following regularly scheduled City Council or Mayoral elections prior to any City business be conducted~~.

Section 12: Ethics

Members of the City Council shall not only be ever conscious that public service is a public trust but shall also be impartial and devoted to the best interests of the City, and shall so act and conduct themselves, both inside and outside the City's service, so as not give occasion for distrust of their impartiality or their devotion to the City's best interests. Members will recognize and abide by the ethics law for municipal officials as provided in the Political Subdivision Ethics Act.

Italics= new language
~~Highlight= Deletions~~

END

The foregoing Resolution was duly adopted and approved by the Mayor and City Council of the City of Piedmont, Oklahoma, on the 24 day of May, 2010, after compliance with notice requirements of the Open Meeting Law (25 OSA, Sections 301, et seq.).

/S_____
MAYOR

ATTEST:

/S_____
CITY CLERK

Approved as to form and legality on May 24, 2010.

/S_____
CITY ATTORNEY

RESOLUTION NO 10-25-2010 C

A RESOLUTION OF THE CITY COUNCIL OF THE CITY OF PIEDMONT ADOPTING THE STANDARD SPECIFICATIONS FOR CONSTRUCTION OF PUBLIC IMPROVMENTS AS THE STANDARDS FOR THE CITY OF PIEDMONT AS REFLECTED IN THE WEB SITE FOR OKLAHOMA CITY WITH MODIFICATIONS AS SET FORTH HEREIN.

WHEREAS, the City of Piedmont has reviewed the standard specifications for construction of public improvements adopted by the City of Oklahoma City and hereby determines that those standards are appropriate and necessary for the City of Piedmont; and

WHEREAS, the standard specifications have been prepared, reviewed and approved by city staff, city engineer and the Planning and Zoning Commission of the City of Piedmont;

NOW THEREFORE BE IT RESOLVED BY THE CITY COUNCIL OF THE CITY OF PIEDMONT AS FOLLOWS:

The document entitled **STANDARD SPECIFICATIONS FOR CONSTRUCTION OF PUBLIC IMPROVEMENTS OF CITY OF OKLAHOMA CITY as found at http://www.okc.gov/pw/admin.html** as hereinafter modified is hereby adopted as the minimum standards and specifications for construction of public improvements in the City of Piedmont, Oklahoma. The standard specifications are incorporated herein by reference. The Standard Specifications of Oklahoma City are hereby modified to include a revised and restated Section 100, which is attached hereto as Exhibit A and incorporated herein by reference. Any reference in the Standard Specifications to the City of Oklahoma City is modified to read City of Piedmont. Attached hereto as Exhibit B is an addendum to the Standards and Specifications modifying specific sections of the Okahoma City Standards and Specifications which addendum is incorporated by reference into this resolution and adopted to modify the Standards and Specifications of the City of Oklahoma City.

ADOPTED AND APPROVED this _____ day of _____, 2010, by the Piedmont City Council and Mayor.

_____
MAYOR

ATTEST:

_____
CITY CLERK

Approved as to form and legality on _____, 2010.

_____
City Attorney

Exhibit A

CITY OF PIEDMONT. OKLAHOMA
STANDARD SPECIFICATIONS FOR
CONSTRUCTION OF PUBLIC IMPROVEMENTS

SECTION 100

SECTION 100

TABLE OF CONTENTS

..... I

SECTION 10 – APPLICABILITY OF STANDARD SPECIFICATIONS 1

SECTION 100 – GENERAL PROVISIONS 2

SECTION 100.01 – DEFINITION OF TERMS 2

SECTION 101 – NOTICE TO BIDDERS 12

SECTION 102 – PREQUALIFICATION OF BIDDERS 12

SECTION 103 – BID REQUIREMENTS AND CONDITIONS 12

103.01 – REQUIREMENTS FOR BIDDERS 12

103.01.01 – PRE-BID CONFERENCE 12

103.01.02 – MANDATORY PRE-BID CONFERENCE 12

103.01.03 - PROVISION FOR INTERPRETERS 13

103.02 – CONTENT OF BID FORMS 13

103.02.01 – BIDDING DOCUMENTS 13

103.02.02 – ADDENDA 13

103.02.03 – SUBSTITUTIONS TO BIDDING DOCUMENTS 13

103.03 – INTERPRETATION OF PLANS AND SPECIFICATIONS 14

103.04 – EXAMINATION OF DOCUMENTS AND WORK SITE 14

103.05 – PREPARATION AND FILING OF BID 14

103.05.01 – BID FORM INSTRUCTIONS 14

103.05.02 – SALES TAX EXEMPTION 15

103.05.02.01 – CITY FUNDED PROJECTS 15

103.05.02.02 – TRUST PROJECTS 16
103.05.03 – BID SIGNATURE REQUIREMENTS 16
103.05.04 – FILING OF BID 16
103.06 – BID AFFIDAVITS 16
103.07 – BID BOND 16
103.08 – NO WITHDRAWAL OR ALTERATION OF BIDS 17
103.09 – OPENING OF BIDS 17
103.10 – IRREGULAR BIDS 17
103.11 – REJECTION OF BIDS 17
103.12 – NONCOLLUSION 17
103.13 – BUSINESS RELATIONSHIP 18
103.14 - SMALL AND DISADVASNTAGED LOCAL BUSINESS PROGRAM 18
SECTION 104 – RESERVED 18
SECTION 105 – EMPLOYMENT PRACTICES 18
105.01 – NONDISCRIMINATION 18
SECTION 106 – RESERVED 19
SECTION 107 – AWARD AND EXECUTION OF CONTRACT 19
107.01 – AWARD OF CONTRACT 19
107.01.01 – ACCEPTANCE OF BID 19
107.01.02 – AWARD OF CONTRACT 19
107.02 – CONTRACT BONDS REQUIRED 19
107.02.01 – PERFORMANCE BOND 20
107.02.02 – STATUTORY BOND 20
107.02.03 – MAINTENANCE BOND 20
107.02.04 – DEFECT BOND 20
107.03 – EXECUTION OF CONTRACT DOCUMENTS 21
107.03.01 – EXECUTION OF CONTRACTS 21
107.03.02 – EXECUTION OF BONDS 21
107.04 – FAILURE TO EXECUTE CONTRACT .....

21
SECTION 108 – SCOPE OF WORK
..... 21
108.01 – INTENT OF PLANS, SPECIFICATIONS AND SPECIAL PROVISIONS .....
21
108.02 – PRE-WORK CONFERENCE .....
21
108.03 – AMENDMENTS, CHANGE ORDERS AND FIELD CHANGES .....
22
108.03.01 – AMENDMENTS .....
22
108.03.02 – CHANGE ORDERS .....
22
108.03.03 – FIELD CHANGES.....
22
108.04 – POST CONTRACT AWARD SUBSTITUTIONS.....
23
SECTION 109 – CONTROL OF THE WORK AND MATERIALS
..... 23
109.01 – WORK ORDER .....
23
109.02 – AUTHORITY OF CITY ENGINEER .....
23
109.03 – CONFORMITY WITH PLANS .....
23
109.04 – ORDER OF CONSTRUCTION .....
23
109.05 – ADJUSTMENT OF EXISTING STRUCTURES AND UTILITIES .....
24
109.05.01 – GENERAL .....
24
109.05.02 – SEWER CONNECTIONS .....
24
109.05.03 – SEWER GRADES .....
24
109.06 – BORING TEST HOLE INFORMATION .....
25
109.07 – WATER USAGE .....
25
109.08 – AUDIO-VIDEO RECORDING PRE- AND POST-CONSTRUCTION .....
25
109.09 – SEDIMENT AND EROSION CONTROL .....
25
109.09.01 - STORM WATER CONSTRUCTION ACTIVITIES PERMIT .....
26
109.10 – EXISTING STRUCTURES NOT SHOWN IN CONTRACT DOCUMENTS .....
26
109.11 – COORDINATION OF THE CONTRACT DOCUMENTS .....
27
109.12 – COOPERATION OF CONTRACTOR .....
27
109.13 – CONSTRUCTION STAKES .....
27
109.14 – MEASUREMENTS .....
27
109.15 – SUBMITTALS AND SHOP DRAWINGS .....
27
109.16 – MATERIALS .....

28
109.16.01 – DELIVERY .....
28
109.16.02 – MATERIALS AND CONSTRUCTION METHODS NOT SPECIFIED .....
28
109.16.03 – CONCRETE AND STEEL REINFORCEMENT .....
28
109.16.04 – SAMPLES .....
28
109.16.05 – TESTS .....
29
109.17 – MATERIALS CERTIFICATIONS .....
29
109.17.01 – GENERAL REQUIREMENTS .....
29
109.17.02 – TYPES OF CERTIFICATIONS .....
29
109.17.03 – DISTRIBUTION OF CERTIFICATIONS .....
30
109.17.04 – BASIS OF ACCEPTANCE .....
30
109.17.05 – STORED MATERIALS .....
31
109.18 – INSPECTION .....
31
109.19 – REMOVAL OF DEFECTIVE AND UNAUTHORIZED WORK .....
32
109.20 – PUNCHLIST .....
32
109.21 – FINAL INSPECTION .....
32
109.22 – FINAL CLEAN UP .....
32
109.23 – CORRECTION OF WORK AFTER FINAL PAYMENT .....
33
109.24 - FINAL ACCEPTANCE OF PRIVATE DEVELOPMENT PROJECTS .....
33

SECTION 110 – LEGAL RELATION AND RESPONSIBILITY TO THE PUBLIC
..... 33
110.01 – LAWS TO BE OBSERVED .....
33
110.02 – PERMITS AND LICENSES .....
33
110.03 – PATENTED DEVICES, MATERIALS AND PROCESSES .....
33
110.04 – SANITARY PROVISIONS .....
33
110.05 – PUBLIC CONVENIENCE AND SAFETY .....
34
110.06 – STREETS, ALLEYS, OR RIGHTS-OF-WAY .....
34
110.06.01 – DETOURS .....
34
110.06.02 – OCCUPYING STREETS, ALLEYS, RIGHT OF WAY OR CITY PROPERTY .....
34
110.06.03 – BARRICADES AND WARNING SIGNS .....
36
110.07 – RAILWAY CROSSINGS .....

36
110.08 – USE OF EXPLOSIVES .....
36
110.09 – PROTECTION AND RESTORATION OF PROPERTY .....
37
110.10 – PROTECTION AND PRESERVATION OF LAND MONUMENTS AND PROPERTY LINE MARKS
..... 37
110.11 – RESPONSIBILITY FOR DAMAGE CLAIMS .....
37
110.12 – CONTRACTOR'S CLAIM FOR DAMAGES .....
38
110.13 – PUBLIC UTILITIES AND PUBLIC PROPERTY TO BE CHANGED .....
38
110.14 – TEMPORARY SEWER AND DRAIN CONNECTIONS .....
39
110.15 – ARRANGEMENT AND CHARGE FOR WATER FURNISHED BY THE CITY .....
39
110.16 – USE OF FIRE HYDRANTS .....
39
110.17 – USE OF A SECTION OR PORTION OF THE WORK .....
39
110.18 – CONTRACTOR'S RESPONSIBILITY FOR THE WORK .....
39
110.18.01 – GENERAL .....
39
110.18.02 – SAFETY AND OSHA RULES AND REGULATIONS .....
39
110.19 – PERSONAL RESPONSIBILITY OF PUBLIC OFFICIALS .....
39
110.20 – WAIVER OF LEGAL RIGHTS .....
40
110.21 – INDEMNIFICATION .....
40
110.22 – CONTRACTOR'S INSURANCE .....
40
110.23 – BUILDER'S RISK INSURANCE .....
42
110.24 – LIENS .....
42
SECTION 111 – PROSECUTION AND PROGRESS..... 42
111.01 – SUBLETTING OF WORK .....
42
111.02 – ASSIGNMENT OF CONTRACT .....
43
111.03 – PROSECUTION OF WORK .....
43
111.03.01 – GENERAL .....
43
111.03.02 – PROJECT SCHEDULE .....
43
111.04 – LIMITATION OF OPERATIONS .....
43
111.05 – CHARACTER OF WORKMEN AND EQUIPMENT .....
43
111.06 – DAY'S WORK AND WORKING HOURS .....

44
111.07 – TIME OF COMMENCEMENT AND COMPLETION .....
44
111.08 – EXTENSION OF TIME OF COMPLETION .....
44
111.09 – FAILURE TO COMPLETE WORK ON TIME .....
45
111.10 – TEMPORARY SUSPENSIONS .....
45
111.11 – SUSPENSION OF WORK AND ANNULMENT OF CONTRACT .....
45
111.12 – TERMINATION OF CONTRACT .....
46
111.13 - PROJECT CLOSE-OUT (FOR BUILDING/FACILITY PROJECTS ONLY):.....
46
SECTION 112 – MEASUREMENT AND PAYMENT
..... 47
112.01 – MEASUREMENT OF QUANTITIES.....
47
112.02 – SCHEDULE OF VALUES (FOR LUMP SUM CONTRACTS ONLY) .....
47
112.03 – SCOPE OF PAYMENT .....
47

112.03.01 – VERIFICATION AND INSPECTION OF PAYROLL RECORDS .....
48
112.03.02 – REPORTS .....
48
112.04 – PAYMENT FOR EXTRA WORK .....
48
112.05 – PARTIAL ESTIMATES .....
48
112.06 – RETAINAGE .....
49
112.07 – SUBSTITUTE SECURITIES FOR RETAINAGE .....
49
112.08 – PAYMENTS WITHHELD .....
50
112.09 – STATE TAX .....
50
112.10 – ACCEPTANCE AND FINAL PAYMENT .....
50
112.11 – FINAL MEASUREMENTS AND FINAL ESTIMATES .....
50
112.12 – WAGE RATES .....
50
INDEX SECTION 100
..... 2

STANDARD SPECIFICATIONS FOR THE CONSTRUCTION OF PUBLIC IMPROVEMENTS

The City's Standard Specifications shall govern all aspects of Bidding and construction of the Project.

NOTE

With respect to all gender related references: where it is stated, "he" or "his" shall be taken to apply whether the authorizing individual is female or male. Dual gender references were avoided to simplify the understanding of the subject matter.

SECTION 10 – APPLICABILITY OF STANDARD SPECIFICATIONS

The provisions for the competitive Bidding of City Projects and the form of and requirements for the Bidding Documents are governed by the Charter and Ordinances of the City, the Oklahoma Competitive Bidding Act, the City's *Standard Specifications for the Construction of Public Improvements*, Resolution #_____ and other adopted policies of the City as amended. Sections 100, 106, 109, 110 111, 112 and 200 through 900 shall apply to all Work (including Public or Private Contracts) performed within the limits of Piedmont.

Sections 100 though 900 shall apply to all Work under Contract with the City and/or its Trusts and Authorities including Informal and Emergency Contracts performed within the limits of Piedmont.

SECTION 100 – GENERAL PROVISIONS

SECTION 100.01 – DEFINITION OF TERMS

The definitions set forth in these Standard Specifications are applicable to the Bidding Documents and Contract Documents.

A

A.A.S.H.T.O. -

American Association of State Highway and Transportation Officials.

ACCEPTANCE –

After completion of the work, formal recorded acceptance of the work by the City Council of the City of Piedmont.

ADDENDUM (ADDENDA) –

Written or graphic instruments issued by the City Engineer prior to the Bid date which modify or interpret the Bidding Documents by additions, deletions, clarifications or corrections.

ADVERTISEMENT –

All of the legal publications pertaining to the Work contemplated or under Contract.

ALTERNATE BID (ADD-ALTERNATE BID, DEDUCT BID OR ALTERNATE BID) –

The amount stated in the Bid to be added to or deducted from the amount of the Base Bid if the corresponding change in the work, as described in the Bidding Documents, is accepted.

AMENDMENT –

A change to the contract document where the unit quantity Bid is increased or decreased and the Unit Price is unchanged. Amendments shall be a part of the Contract Documents upon their approval by the City.

A.N.S.I.-

American National Standards Institute.

ARCHITECT –

That person or firm engaged to prepare the Plans and Specifications and administers the construction of the Work that may be under Contract with the City or other Contracting entity.

A.S.T.M. -

American Society for Testing Materials.

AWARD –

The decision of the City to accept the Bid of the lowest and best Bidder for the work, subject to the execution and approval of a satisfactory Contract and the required Bonds, to such other conditions as may be specified or otherwise required by law.

B

BASE BID –

The sum stated in the Bid for which the Bidder offers to perform the Work described in the Bidding Documents as basis for the Work.

BID DATE AND BID TIME -

The date and time for the receipt of Bids as provided in the Notice to Bidders.

BID BOND –

The security submitted with the Bid which shall either be a certified check, cashier's check or Bid Bond equal to five percent (5%) of the Bid or in the form of an irrevocable letter of credit in the amount of five percent (5%) of the Bid. The Bid Bond is issued in accordance with the provisions of the Public Competitive Bidding Act of 1974, as amended (61 Okla. Stat. 1991, 107). The calculation of the amount of the Bid Bond shall be as provided in the Instructions to Bidders.

BID –

A Bid consists of the required documents or statements duly submitted in accordance with the Notice to Bidders by the person offering to perform the Work contemplated. A Bid is the complete and properly signed offer to do the Work for the sums stated therein and submitted in accordance with the Bidding Documents. A submission shall not be considered a Bid if it is untimely. A submission by a Bidder who is not Prequalified shall not be considered a Bid unless Prequalification is specifically waived in the Bidding Documents.

BID FORM -

The approved City form on which a Bid for the Work is to be prepared and submitted.

BID COMMITTEE –

That committee consisting of the Purchasing Agent, the City Clerk and the City Engineer who shall be responsible for opening all Bids.

BIDDER –

Any person or persons, partnership, company, firm or corporation acting directly or through a duly authorized representative submitting a Bid for the Work contemplated.

BIDDING DOCUMENTS –

Refer to Figure 100.1 for reference. Those documents (hardcopy or electronic) consisting of:

A) Project Plans
B) Standard Specifications
C) Special Provisions
D) Bid Package
1) Bid Package Cover Sheet
2) Notice to Bidders
3) Instructions to Bidders
4) List of Documents Required for this Bid
5) Signature Requirements for Bidding Documents
6) Bid Form including Bid Form with Alternates and/or Detailed or Unit Price Bid Form, if included in the documents
7) Noncollusion Affidavit
8) Business Relationship Affidavit
9) Local Business Utilization Affidavit
10) Any documents listed in the List of Documents Required for the Bid
E) Bid Security or Bid Bond
F) Addenda
G) Example Contracts and Bonds

BID PACKAGE –

Those documents required to be submitted with the Bid in accordance with the List of Documents Required for Bid as outlined in the Special Provisions.

BID SECURITY –

The "Bid Security" is that security submitted with the Bid which shall be in the form of a certified check, cashier's check or Bid bond equal to five percent (5%) of the Bid or of an irrevocable letter of credit in the amount of five percent (5%) of the Bid and issued in accordance with the provisions of the Public Competitive Bidding Act of 1974, as amended. (61 Okla. Stat. 1991, §107)

BONDS –

The Bid, Performance, Statutory, Maintenance, Defect and any other bond required by the Special Provisions.

C

CITY – THE CITY OF PIEDMONT, OKLAHOMA –
A municipal corporation, acting through its duly authorized representatives, agents or employees. This definition shall incorporate "Trust" or "Authority" when in the Bidding Documents the Contracting entity is identified as one of the City's specified trusts, boards, or authorities of which the City is a beneficiary.

CITY CLERK –
The City Clerk of the City of Piedmont, Oklahoma, or duly authorized representatives or agents.

CITY ENGINEER –
The City Engineer of the City of Piedmont, Oklahoma and when so designated by the City Engineer, duly authorized agents, Architects, Engineers, representatives, inspectors or superintendents, acting severally or individually within the scope of the particular duties entrusted to them.

CITY MANAGER –
The City Manager of the City of Piedmont, Oklahoma, or duly authorized representatives or agents.

CITY TREASURER –
The City Treasurer of the City of Piedmont, Oklahoma, or duly authorized representatives or agents.

COMPLETED –
The Work is constructed in accordance with the Plans and Specifications and other Bidding Documents is fully completed, the Final Inspection(s) have been made, and any corrections made to the satisfaction of the City Engineer.

CONTRACT –
The executed agreement covering the performance of the Work.

CONTRACT DOCUMENTS –
All documents included in the Bidding Documents (Refer to Figure 100.1) and the documents consisting of:

A) Contract,
B) Bonds,
a. Performance
b. Statutory
c. Maintenance
d. Defect (for companies outside the City Limits)
C) Contractor Identification Numbers
D) Certificate of Insurance
E) Certificate of Nondiscrimination
F) Submittals,
G) Amendments,
H) Field Changes and
I) Change Orders.

CONTRACTOR –
The person or persons, partnership, company, firm or corporation who performs private or public work in the City.

COUNCIL –
The City Council of the City of Piedmont, Oklahoma.

D

DETAILED BID FORM –
The City's approved form noting individual pay items, estimated quantities, unit Bid prices and total item prices on which Bids are based.

DEFECT BOND–
The approved City form properly executed by the Contractor and its Surety as a guarantee of the Contractor's intent to perform and maintain Contract Work in accordance with the Contract Documents.

DEFECTIVE BID –

The condition a bid is found to be if not in compliance with the instructions to bidders or applicable laws. Also known as irregular.

DEVELOPER –

The owner of a tract of land making improvements in accordance with these Specifications. Any person obtaining permits to perform work in the City. The Developer may operate through an Architect or Engineer.

E

ENGINEER –

That person or firm engaged to prepare the Plans and Specifications and administer the construction of the Work that may be under Contract with the City or other Contracting entity.

EQUIPMENT –

Any tool or operable machinery used in the performance of Contract Work.

EXTRA WORK –

Any work performed by the Contractor not provided for in the Contract Documents.

F

FIELD CHANGE –

A formal method of directing the Contractor to implement a Project change where there is no additional cost to the Project. A Field Change requires written approval by the City Engineer.

FINAL ACCEPTANCE–

That action taken by the City formally accepting the completed project and placing the Maintenance Bonds into effect.

FINAL INSPECTION –

That inspection performed after all punchlist inspection items are completed to the satisfaction of the City Engineer, immediately prior to Project Final Acceptance.

FURNISH –

To supply.

G

GRADE –

The slope of the pavement, channel, pipe or any other item. The rise over the run of the item.

H

HOLIDAY –

Any day so designated by the City of Piedmont's City Council.

I

INSPECTOR –

Representative of the City Engineer authorized to make inspections of Contract performance.

IRREGULAR BID –

Also known as defective bid.

INCIDENTAL WORK -

That work necessary to complete the project or bid item with in the scope or the Work bid and awarded.

ITE –

Institute Of Transportation Engineers

J

JOB SITE –

Work area under the responsibility of the contractor for contracted work.

L

LABOR –

That effort employed by the Contractor to perform Contract Work.

LIQUIDATED DAMAGES –

The amount prescribed in the Standard Specifications to be paid to the City or to be deducted from any payments due or to become due the Contractor for each day's delay in completing the whole or specified portion of the Work beyond the time allowed in the Contract Documents. Liquidated Damages are not a penalty to the Contractor.

M

MAINTENANCE BOND –

The approved City form properly executed by the Contractor and its Surety as a guarantee that

the Work will be properly maintained as constructed by the Contractor against any failure due to workmanship or defective material for the period required.

MAJOR PAY ITEM –

Any contract pay item that is equal to or exceeds the following values:

Contract Cost	Item Total (% of Original Contract Award Amount)
$0 – 1,000,000	5 %
$1,000,001 – 4.000,000	2 ½ %
$4,000,001 – and above	1 ½ %

MATERIALS –

Those items placed on the Project to complete the Contract (including any purchased equipment).

MAYOR –

The Mayor of the City of Piedmont, Oklahoma.

MUNICIPAL COUNSELOR –

The Municipal Counselor of the City of Piedmont, Oklahoma, or duly authorized representatives or agents.

MUTCD –

Manual On Uniform Traffic Control Devises

N

NEMA –

National Electrical Manufacturers Association

NONCOLLUSION AFFIDAVIT –

The form signed by the Bidder as a necessary part of the Bid that affirms the Bidder has not colluded with the awarding public entity(ies), their officers or their staff or any other bidder.

P

PERFORMANCE BOND –

The approved City form properly executed by the Contractor and its Surety as a guarantee that the Work will be properly executed and the Contract will be completed in accordance with the Contract terms and conditions.

PERMIT –

The document issued by the City authorizing Work to be performed.

PERSON –

Any individual, legal entity, or corporation, association, partnership, Limited Liability Company, Limited Liability Partnership or any other legal entity.

PLAN OR PLANS –

All of the drawings pertaining to the Contract Documents and made a part thereof, including such supplemental drawings as the Architect and/or Engineer may issue from time to time, in order to clarify other drawings or for the purpose of showing changes in the Work or for illustrating details not shown.

PREQUALIFICATION –

The requirement that all contractors be approved and on the City of Oklahoma City prequalification list.

PROJECT –

All the activities specified, indicated, shown or contemplated in the Contract Documents to construct the improvement, including all labor, materials, tools, equipment and incidentals, contract alterations, permits or other authorized orders of the City Engineer.

PROVIDE –

To furnish, erect or install.

PUNCHLIST INSPECTION –
That inspection performed at the request of the Contractor and at the discretion of the City Engineer. This inspection is performed after Project substantial completion.
PUBLIC IMPROVEMENT WORK –
Any building, highway, street, sewer, pavement, waterline, sidewalk, or any other improvement or structure which is constructed, altered, or repaired under Contract or any instrument with the City. Public Improvement Work includes, but is not limited to, private work in public right-of-way and private work to be conveyed to City. This Work also includes all the activities specified, indicated, shown or contemplated in the Contract Documents to construct the improvement, including all labor, materials, tools, equipment and incidentals, contract alterations, permits or other authorized orders of the City Engineer.
S
STANDARD SPECIFICATIONS –
This term shall mean the directions, provisions and requirements contained in the Standard Specifications as supplemented by the Special Provisions.
SPECIAL PROVISIONS –
The special clauses setting forth conditions or requirements for the specific project involved, supplementing the Standard Specifications and taking precedent over any conditions or requirements of the Standard Specifications with which they may be in conflict.
SPECIFICATIONS –
The directions, provisions and requirements contained in the Standard Specifications together with the Special Provisions pertaining to the method and manner of performing the work or to the kinds, quantities or qualities of materials to be furnished under the Contract Documents and methods of measurement and basis of payment.
STATUTORY BOND –
The approved City form of Surety properly executed by the Contractor and the Contractor's Surety as a guarantee that all bills and accounts for material and labor used in the construction of the work will be paid, as provided by law.
SUBMITTAL –
Drawings or documents submitted for review and approval of items specified in the Bidding Documents.
SUBSTITUTIONS –
A Contractor submitted proposal to modify the Plans, Specifications, or other Contract requirements. The substitution shall not impair in any manner the essential functions or characteristic of the project, including but not limited to:

A) service life,
B) economy of operations,
C) ease of maintenance,
D) desired appearance or design; and
E) safety standards.

SURETY OR SURETIES –
The corporate body or legal entity which is bound by the respective Bonds.
U
UNIT PRICE –
An amount stated in the Bid as a price per unit of measurement for materials, equipment, services or Work as described in the Bidding Documents.
W
WORK –
All the activities specified, indicated, shown or contemplated in the Contract Documents

to construct the improvement, including all labor, materials, tools, equipment and incidentals, contract alterations, permits or other authorized orders of the City Engineer.

WORKING DAY –

Any day, other than a legal City holiday, Saturday, or Sunday, on which the approximate normal working forces of the Contractor may proceed for at least six (6) hours toward completion of the Work, unless Work activity is suspended by the City Engineer for causes beyond the Contractor's control, provided that Saturdays, Sundays or holidays on which the Contractor's forces do engage in Work activity will be considered as Working Days.

WORK ORDER-

The document issued by City directing commencement of Work.

Figure 100-1

Bidding and Contract Documents

Bidding Documents and Contract Documents

The following figure illustrates the eleven basic components of documents used to communicate what is intended for construction. The Bidding Documents consist of the first six components. Contracts and Bonds are executed after the Award of Contract to the successful Bidder and are considered with the Bidding Documents to comprise the Contract Documents.

PLANS

STANDARD SPECIFICATIONS

SPECIAL PROVISIONS

BID PACKAGE

ADDENDA

EXAMPLE CONTRACT
AND BONDS

Bidding Documents (also Contract Documents for successful Bidder)

CONTRACT

EXECUTED BONDS

SUBMITTALS

AMENDMENTS

FIELD CHANGES

CHANGE ORDERS

Contract Documents for successful Bidder

SECTION 101 – NOTICE TO BIDDERS
The City will receive Bids in accordance with the Notice to Bidders located in the Special Provisions for the Project. Informal Bids will be received in accordance with the City's current Informal Bid policy and procedures, as amended.
SECTION 102 – PREQUALIFICATION OF BIDDERS
The City has by resolution adopted the prequalification list of contractors of the City of Oklahoma City Copies are available for review in and may be obtained through the Office of the Oklahoma City, City Clerk, 200 North Walker Avenue, Second Floor, Oklahoma City, Oklahoma 73102.
The City may require prospective bidders to prequalify as responsible bidders prior to submitting bids on a public construction contract. The applicable prequalification requirements shall be set forth in the special provisions for the project.
Regardless of whether or not prequalification is required, any proposed Contractor or Bidder must have obtained any license or licenses required by the City, State or Federal Government which is/are necessary to the accomplishment of the work. Such license(s) must have been obtained prior to the submission of a Bid on the project. Failure to possess the necessary license(s) is reason for a recommendation to the City Council that a Contract not be awarded.
SECTION 103 – BID REQUIREMENTS AND CONDITIONS
Bidders shall comply with all provisions contained in this Section 103 unless modified by the Special Provisions.
103.01 – REQUIREMENTS FOR BIDDERS
Prior to submitting a Bid, Bidders shall comply with the Prequalification requirements as set forth in Section 102 of the Standard Specifications.
No Bidder shall divulge the sealed contents of a Bid to any person whomsoever, except those having a partnership or other financial interest with the Bidder in said Bid, until after the sealed Bids have been opened. A violation on the part of the Bidder shall make void any Contract made by the Bidder with the City based upon such Bid.
103.01.01 – PRE-BID CONFERENCE
The City may require prospective Bidders to attend a Pre-Bid Conference as a prequalification requirement to be eligible to submit a sealed Bid.
103.01.02 – MANDATORY PRE-BID CONFERENCE
When specified, attendance is a prequalification requirement. The Contractor who plans to submit a Bid must attend this conference. The engineer and any consultant for the project must also attend this conference. Failure of the prospective Bidders to attend this conference will cause the City Clerk to return the Bidder's submission unopened. The purpose of the conference is to discuss the plans and specifications.
The Pre-Bid Conference will begin at the designated time; a sign-in sheet will be passed to all attendees; only full-time employees of the prospective Bidder's company will be considered as eligible representatives for attendance; and, five minutes after the meeting is called to order, the sign-in sheet will be closed (late arrivals will not be allowed to sign in). The official timekeeper for closing the sign-in sheet shall be the Engineer or staff member chairing the Pre-Bid Conference.
In the case of a joint venture, an eligible representative from each of the participating organizations in the joint venture must be in attendance. Sub-contractors are not required to attend.
The following will not be eligible to Bid on the project: (1) prospective Bidders leaving the meeting prior
to adjournment of the Pre-Bid Conference; (2) prospective Bidders whose names have been placed on the sign-in sheet, but were not in attendance; or, (3) anyone arriving at the pre-Bid Conference after the sign-in sheet has been closed.
Prospective Bidders leaving the conference prior to adjournment, or whose name has been

placed on the sign-in sheet (but was not in attendance), or anyone arriving at the Pre-Bid Conference after the sign-in sheet has been closed, will not be eligible to Bid on the that project.

103.01.03 - PROVISION FOR INTERPRETERS
In compliance with the provisions of the Americans with Disabilities Act, upon twenty-four hours notice to the City Engineer, a sign language interpreter will be provided for the Pre-Bid Conference.

103.02 – CONTENT OF BID FORMS

103.02.01 – BIDDING DOCUMENTS
The Bidding Documents are located at the City Clerk's Office, Piedmont, OK , or as designated in the Notice to Bidders. Required deposits will be non-refundable to Bidders in accordance with the Special Provisions

103.02.02 – ADDENDA
The Bidding Documents represent all the information that will be provided by the City. Interpretations and corrections of and/or changes to the Bidding Documents will be made only by Addendum. Addenda shall be issued by the City Engineer and approved or ratified by the City. Interpretations and/or changes made in any other manner will not be binding upon the City and Bidders shall not rely upon them.
Addenda will be mailed, faxed, e-mailed or delivered only to those who have signed and completed the Bidding Document Receipt List for the Project. This list is maintained in the City Clerk's Office.
Copies of Addenda will be made available for inspection in the City Clerk's Office.
The following shall be considered proof that a Bidder received an Addendum:

A) Mailed Addendum: The Bidder's signature or Bidder's representative's signature on the Certified Mail Return Receipt.

B) Hand Delivered or Picked-Up Addendum: The Bidder's or Bidder's representative's signature on the Addendum Receipt Signature List.

C) Faxed Addendum: The City's or the Architect and/or Engineer's Fax Confirmation Sheet.

D) E-mailed Addendum: The City's and/or Trust's or the architect/engineer's e-mail delivery receipt verification.

E) It shall be the obligation of the Bidder to ascertain receipt of Addenda prior to the Bid date.

103.02.03 – SUBSTITUTIONS TO BIDDING DOCUMENTS
No substitution will be considered prior to the receipt of Bids unless a written request for approval has been received by the City Engineer no later than seven (7) days prior to the Bid date. Such requests shall include the name of the material, product, or equipment for which it is to be substituted and a complete description of the proposed substitution including drawings, performance and test data and other information necessary for an evaluation. A statement shall be included in the written request setting forth changes in other materials, products, equipment or other portions of the Work including changes in the Work of other Contracts that incorporation of the proposed substitution would require. The burden of proof of the merit of the proposed substitution is upon the Bidder.
If a proposed substitution is approved prior to Bid date, such approval will be set forth in an Addendum
issued by the City Engineer and subsequently approved or ratified by the City Council. Bidders shall not rely upon approvals made in any other manner.

103.03 – INTERPRETATION OF PLANS AND SPECIFICATIONS
The Bidder, by making a Bid, represents that the Bidder has:

A) Scrutinized, compared, read carefully and understands the Bidding Documents;

B) Inspected the site and become familiar with local conditions under which the Work is to be performed;

C) Informed himself by independent research of the difficulties to be encountered and personally judged the accessibility of the Work and all attending circumstances affecting the cost of doing the Work and of the time required for its completion;

D) Correlated the Bidder's personal observations with the requirements of the Bidding

Documents and ensures the Bid is made in accordance therewith;

E) Become familiar with and understands all other Projects which may affect the Work or access to the Work site; and

F) Based the Bid upon the materials, equipment, systems or services required by the Bidding Documents without exception.

The Bidder shall communicate to the City Engineer or the Architect and/or Engineer any errors, inconsistencies or ambiguities discovered in the Bidding Documents. All requests for interpretation of the Bidding Documents must be made to the City Engineer.
A Bidder in doubt as to the true meaning of any part of the Bidding documents, may submit to the City Engineer a timely written request for an interpretation thereof. An interpretation of the proposed documents will be made only by Addendum duly issued and a copy of such Addendum will be mailed or delivered to each person on the Bidding Document Receipt List. Bidders shall be responsible for their plans, estimates, interpretations and assumptions which are necessary for completing the Bid. It is mutually agreed that submission of a Bid will be evidence that the Bidder has made all required examinations and investigations.

103.04 – EXAMINATION OF DOCUMENTS AND WORK SITE

Bidders are advised that the Bidding Documents on file with the City Clerk shall constitute all the information the City will furnish for the Project. Bidding Documents will only be amended by Addenda approved by the City Engineer. It is mutually agreed that submission of a Bid will be representation that the Bidder has made all required examinations and investigations.

103.05 – PREPARATION AND FILING OF BID

Bids must be submitted on the Bid Form and Detailed Bid Form(s) as appropriate. Said forms will be provided by the City and will state the general description of the Work. Bids shall be completed in accordance with the Bidding Documents and will contain all required affidavits.

103.05.01 – BID FORM INSTRUCTIONS

Bids shall be submitted on the Bid Form and Detail Bid Form(s) contained in the Bid Package or photocopies thereof. All blanks on the Bid Form and Detail Bid Form(s) shall be filled in by typewriter or legibly written in ink. All written prices shall be distinctly legible. Where so indicated by the makeup of the Bid Form and/or Detailed Bid Form(s), sums shall be expressed in both words and figures and in case of any discrepancy between the two, the amount written in words shall govern.
Detailed Bid Form(s) are included in the Bid Package when the Work is Bid all or partially on a Unit Price basis. If a Detailed Bid Form is provided, the Bidder is to enter the cost per unit in words and in numerals and then enter the total cost of the item (estimated quantity multiplied by the Unit Price) in the
column under *Item Total*.
The total of the *Item Total* column will be entered at the bottom of the Detailed Bid Form and on the Total Bid line on the Bid Form. Bidders shall insure that the total of the Detailed Bid Form is entered correctly on the Bid Form. In cases of conflict between words and numerals, the words will govern. In cases of conflict between the amount on the Bid Form and the amount on the Detailed Bid Form, the correct total on the Detailed Bid Form will govern. Written Unit Prices shall govern over figures. Written Unit Prices shall govern over Item totals.
There may be a Detailed Bid Form for one or more Alternates. If a Detailed Bid Form is provided for an Alternate, it should be completed in the same manner as the form for the Base Bid. An example of a correctly completed Detailed Bid Form is shown in Figure 103.05.01.
Where a Detailed or Unit Price Bid Form for the submission of Unit Prices is provided in the Bidding Documents, the Bidder will complete the Detailed Bid Form and then enter the total amount of the Bid on the Bid Form. The total amount on the Bid Form shall be based upon the Unit Prices. The signer of the Bid must initial erasures and/or corrections on any Bid Form or Detailed Bid Form. A Bid with erasures and/or corrections that are not initialed shall be considered to be irregular.

Figure 103.05.01
Detailed Bid Form Instructions
DETAILED BID FORM ITEMS
PROJECT NO. _____

Item No.	Description	Unit	Estimated Quantity	Unit Price	Item Total
1.	6" P.C. Concrete	SY	45	*$15.00*	*$675.00*
Fifteen and no/100---------- Dollars ----------					
	(Unit Price dollars written)				
2.	6" Integral Curb	LF	70	*$1.50*	*$105.00*
One and 50/100---------- Dollars ----------					
	(Unit Price dollars written)				
3.	6" Curb Removal	SY	56	*$2.13*	*$119.28*
Two and 13/100---------- Dollars ----------					
	(Unit Price dollars written)				
4.	Plug Existing 42" RCP	LS	1	*$300.00*	*$300.00*
Three Hundred and no/100---------- Dollars ----------					
	(Unit Price dollars written)				

Detailed Bid Form Subtotal **$ *1,199.28***

103.05.02 – SALES TAX EXEMPTION

103.05.02.01 – CITY FUNDED PROJECTS

Title 68 Oklahoma Statutes (1991), Section 1356 (I), exempts sales to a municipality and its Contractors from all sales tax on the sale of "tangible personal property or services." All Bids for City Projects shall be assumed to have been made based on such statutory exemption as effective on the Bid date. The City shall not pay any sales tax and shall not reimburse the Contractor for any tax on purchases by the Contractor except as included in the unit price. No change orders or amendments
shall be approved for reimbursement of sales tax or changes in sales tax. A change in sales tax shall not be deemed a change in conditions of the Contract.

103.05.02.02 – TRUST PROJECTS

For the purposes of a bid and award of contract and pursuant to Oklahoma Tax Commission Rule 710:65-13-550, it is assumed that the materials provided by the contractor are not exempt from applicable sales taxes. All payments including sales tax are deemed to be paid under protest.

103.05.03 – BID SIGNATURE REQUIREMENTS

An authorized agent of the Bidder must properly sign all documents. The City reserves the right to require a Bidder to provide any documentation it may deem necessary to verify authorized signature.

103.05.04 – FILING OF BID

The Bid is to be submitted in a sealed envelope. Each envelope shall bear a legible notation thereon that it is a Bid upon the Project proposed. The Bid shall be submitted to the City Clerk's office in accordance with the dates and times specified in the notice to Bidders.
If the Bid is sent by mail, the sealed envelope, marked as described above, shall be enclosed in a separate mailing envelope with the notation "SEALED BID ENCLOSED" on the face thereof. The Bid shall include the Bid Form and affidavits, the Bid Security and any other documents required to be submitted with the Bid shall be enclosed in a sealed opaque envelope. The envelope shall be addressed to the City Clerk of Piedmont and shall be marked **"SEALED BID FOR PROJECT _____"** and shall state the Bidder's name and address and, if applicable, the Project Description for which the Bid is submitted.

103.06 – BID AFFIDAVITS

Affidavits contained in the Bid Package must be properly signed by an authorized agent of the Bidder. The City reserves the right to require a Bidder to provide any documentation it may

deem necessary to verify authorized signature. The Bid will contain all required Affidavits as listed in the "List of Documents Required for this Bid". Bids shall be completed in accordance with the Bidding Documents.

103.07 – BID BOND

Each Bid shall be accompanied by a Bid Bond for the amount of five percent (5%) of the amount of the Bid. The Bid shall mean the highest combination of the Base Bid plus Alternate Bids for the purposes of determining the amount of the Bid Bond. The Bid Bond is a pledge that the Bidder will enter into a Contract with the City on the terms stated in the Bid and will furnish Bonds covering the faithful performance of the Contract and payment of all obligations. Should the Bidder refuse to execute or fail to furnish other required Contract Documents, the amount of the Bid Bond shall be forfeited to the City as liquidated damages, not as a penalty.

The City has the right to retain the Bid securities of Bidders until either:

A) The required Contract Documents have been executed or submitted by the successful Bidder;

B) The specified time to Award Bids has elapsed so that Bids may be withdrawn in accordance with State law;

C) All Bids have been formally rejected by the City; or

D) A Bidder has been determined to be the successful Bidder.

Bids will not be considered unless the original Bid submitted to the City Clerk's Office is accompanied by a Bid Bond, or a certified/cashier's check, made payable to the Treasurer of the City of Piedmont, in the required amount.

103.08 – NO WITHDRAWAL OR ALTERATION OF BIDS

Permission will not be granted to withdraw or modify any Bid after it has been submitted. Request for non-consideration of Bids must be made in writing, addressed to the City and submitted to the City Clerk before the time set for opening Bids.

103.09 – OPENING OF BIDS

Bids properly submitted and timely received will be opened publicly and will be read aloud. Opened Bids will remain on file in the Office of the City Clerk for at least two (2) days before a Contract is Awarded. A tabulation of Bid information may be made available to the Bidders within a reasonable time.

103.10 – IRREGULAR BIDS

Any Bid that shows any omission, alteration of form, addition, substitution or condition not specified and any unauthorized Alternate Bid shall be deemed irregular. However, the City reserves the right to waive irregularities and make the Award in the best interest of the City.

103.11 – *REJECTION OF BIDS*

The City will consider and reserves the right to reject any or all Bids and all Bids submitted are subject to this reservation. A Bid shall be rejected for any of the following specific reasons:

A) The Bid Form is not signed by the Bidder or Bidder's authorized agent

B) The Noncollusion Affidavit, as required by the City Charter and the Oklahoma Competitive Bidding Act, has not been submitted with the Bid; the text of the affidavit has been altered; and/or the affidavit is not properly signed and/or notarized. (61 Okla. Stat. (1991) § 115 and Piedmont Charter, Article IX § 4)

C) The Business Relationship Affidavit, as required by the Oklahoma Competitive Bidding Act, has not been submitted with the Bid; the text of the affidavit has been altered; has not entered requested information, if any in the blanks provided; and/or the affidavit is not properly signed or notarized. (61 Okla. Stat. (1991) §108)

D) The Bid Security or Bid Bond, as required by the Oklahoma Competitive Bidding Act, is not attached to the Bid. (61 Okla. Stat. (1991) §107)

E) The Bid fails to comply with any other requirements of City, State, or federal law and/or any other forms required by the Bidding Documents are not properly completed and submitted.

A Bid may be rejected based on the following reasons:

A) The Bid is received after the time limit for receiving Bids as stated in the advertisement, or before designated time for submittal.

B) A Bid price obviously unbalanced.
C) Total Bid price above the Architect and/or Engineer's estimate of total cost.
D) Bids that are incomplete, such as required signatures or material irregularities.
E) Bidder is not prequalified unless prequalification is waived in Special Provisions.

103.12 – NONCOLLUSION

A Noncollusion Affidavit shall accompany each Bid. Bids will not be considered unless a properly and fully executed Noncollusion Affidavit accompanies the Bid submitted to the City Clerk. The Noncollusion Affidavit is a sworn statement, which provides that the bidder has not made any agreement or colluded with the City or any bidders or prospective bidders in restraint of freedom or competition or has agreed to bid at a fixed price or to refrain from bidding. Violation of a provision of the Noncollusion Affidavit shall render the bids of such bidders void and persons willfully violating this requirement shall be guilty of a felony. Bidders must use the Noncollusion Affidavit provided by the City in the project specifications. The text of the Noncollusion Affidavit may not be modified. The Bidder may, however, adapt the signature block to provide for additional signatures.

103.13 – BUSINESS RELATIONSHIP

A Business Relationship Affidavit shall accompany each Bid. Bids will not be considered unless a properly and fully executed Business Relationship Affidavit accompanies the Bid submitted to the City Clerk. The Business Relationship Affidavit is a sworn statement which discloses the following information: the nature of any business relationships then in effect or which existed within one (1) year prior to the date of such statement with the architect, engineer or any officer or director of the architectural or engineering firm or other party to the project; and the names and positions of all persons having any such business relationships. Bidders must use the Business Relationship Affidavit provided by the City in the project specifications. The text of the Business Relationship Affidavit shall not be modified. The Bidder may; however, adapt the signature block to provide for additional signatures.

SECTION 104 – RESERVED

SECTION 105 – EMPLOYMENT PRACTICES

105.01 – NONDISCRIMINATION

Contractors shall execute and comply with the provisions of the Non-Discrimination Affidavit. Contractors shall conspicuously post a copy of the Non-Discrimination Affidavit at the local place of business. Contractors shall include a similar requirement in all Sub-Contracts. Copies of the "Notice of Equal Employment Opportunity" poster issued by the City Clerk will be given to the Contractor at the Pre-Work Conference. The poster must be exhibited in a central and public location at the place of business by the Contractor and each subcontractor while the Contractor and any subcontractors are performing work on the project.

SECTION 106 – RESERVED

SECTION 107 – AWARD AND EXECUTION OF CONTRACT

107.01 – AWARD OF CONTRACT

107.01.01 – ACCEPTANCE OF BID

It is the intent of the City to Award a Contract to the lowest and best Bidder provided the Bid has been submitted in accordance with the requirements of the Bidding Documents.
The City reserves the right to select alternates in any order or combination, unless otherwise specifically stated in the Bidding Documents. The lowest and best Bidder shall be determined on the basis of the sum of the Base Bid and selected Alternate Bids.

107.01.02 – AWARD OF CONTRACT

The Awarding of a Contract upon a successful Bid shall give the Bidder no right to action or claim against the City upon such Contract until the same shall have been reduced to writing and duly signed by the Contracting parties.
Should a Bidder who is Awarded a Contract upon a Bid fail to execute and provide the Contract and bonds or to provide the required certificates of insurance and/or any other required documents, the City Council reserves the right to rescind the award and offer the Contract to the Bidder deemed to be the next lowest and best Bidder.
Should a Bidder who is awarded a Contract fail to execute and furnish the required Contract Documents, the City Council has the right to Award the Contract to the Bidder deemed to be the

next lowest and best Bidder.
The Bidder has no right to action or claim against the City until the Contract is executed by all parties
The successful Bidder will be provided one (1) complete sets of the Project Contract Documents. The successful Bidder will execute all one (1) sets in original signatures and return within seven (7) calendar days following the City's notification of its intent to Award Contract, unless that time is extended by the City Engineer. All Bidders should arrange with their respective insurance and Bonding company(s) to complete all required insurance and Bond documents. The Contract shall not be operative nor shall any payments be due until approval of the Contracts and Bonds by the City.
The City is not required to award a contract to the low bidder. The City may Award a contract to the lowest and best bidder or bidders (lowest responsible bidder). Awards are made within thirty (30) days after the opening of bids. Provided that the City may, by formal recorded action and for good cause shown, authorize a reasonable extension of that period to the extent permitted by law. The City reserves the right to not award a contract, to reject any or all bids, and to solicit new or different bids. No bidder shall obtain any property right in a contract awarded until the contract has been fully executed by both the bidder and the City.

107.02 – CONTRACT BONDS REQUIRED

A Surety may be rejected that is in default or delinquent on any Bond, or is interested in any litigation against the City. All Bonds shall be executed on forms furnished by the City (or photocopies thereof) and shall be executed by Surety companies licensed to do business in the State of Oklahoma and conform to the requirements of Ordinance No. 5928. The Contractor and the Surety shall execute each Bond which shall remain continuously in full force and effect in accordance with the bonding requirements.
Should any Surety be determined unsatisfactory at any time by formal City resolution, notice will be given and the Contractor shall substitute a new Surety satisfactory to the City. No payment will be made under the Contract until the new Surety, as required, has been accepted by the City. The Bidder shall require the attorney-in-fact who executes the required bonds on behalf of the surety to affix
thereto a certified and current copy of the power of attorney.
The cost of all Bonds shall be included in the amount of the Bid. The successful Bidder shall at its own cost procure and submit the following Bonds as required in the Bidding Documents:

107.02.01 – PERFORMANCE BOND

The Performance Bond guarantees completion of the Project intended in the Contract Documents and guarantees the Contractor's full and faithful execution of the Work and performance of the Contract. A Performance Bond also guarantees protection of the City, and all property owners against any neglect, damage by reason of acts or omissions of the Contractor or the improper execution of the Work or the use of inferior, non-compliant and/or defective materials or equipment. A Performance Bond shall be executed in favor of the City.

107.02.02 – STATUTORY BOND

The Statutory Bond guarantees the Contractor will make payment for all labor, materials and equipment used in or for the Project and/or for the performance or provision of the Work. The Statutory Bond shall be executed in favor of the State of Oklahoma.

107.02.03 – MAINTENANCE BOND

The Maintenance Bond guarantees the maintenance in good condition of the Workmanship and materials and the operation of the Project as intended in the Contract Documents for a specified period after the completion and Acceptance of the Project by the City. The term of the Maintenance Bond is provided in the Contract Documents. The Maintenance Bond will be in the amount equal to one hundred percent (100%) of the Contract amount for the following terms:
Unless otherwise provided in the Bidding Documents, the term of the Maintenance Bond shall be as follows:
1 Year: Street resurfacing Projects.
2 Years: All buildings, park Projects and traffic control Projects. All streets, bridges, environmental, water, sanitary sewer and storm drainage Projects.
The Maintenance Bond shall be executed in favor of the City.
In addition, a maintenance bond executed in favor of the City is required whenever a contractor

enters a contract with a federal, state, or local government entity or with a private entity relating to facilities or improvements to be owned and operated by the City or its Trusts.

107.02.04 – DEFECT BOND

The Defect Bond guarantees the Contractor shall timely repair any defect and maintain or provide for the timely maintenance of any repair on the Project for the term of the Maintenance Bond. The Defect Bond will be in an amount equal to one hundred percent (100%) of the Contract amount. The Defect Bond shall be executed in favor of the City.

The Contractor shall comply with one of the following provisions:

A) The Contractor has shown proof of the Contractor's intentions to perform and maintain for the specified period of Maintenance Bond tenure by establishing within a forty (40) mile radius of the office of the City of Piedmont, Oklahoma.

1) A business address

2) With a telephone (staffed by competent employees approved by the City Engineer under whose supervision the Work will be performed) and

3) A yard equipped with sufficient necessary equipment available 24 hours-a-day to perform and maintain all classes and subclasses of Work for which the Contractor is pre-qualified to Bid.

4) This office and yard as equipped shall have been established prior to the time the applicant submits the Contractor's application for qualification.

B) The Contractor opts to have the City retain a sum equal to fifteen percent (15%) of the total Contract amount for the extent of the maintenance period (said funds may be used by the City).

C) The Contractor opts to provide a properly executed Defect Bond. The duration of the Defect Bond shall be the same duration as the Maintenance Bond.

107.03 – EXECUTION OF CONTRACT DOCUMENTS

107.03.01 – EXECUTION OF CONTRACTS

The Contractor will submit the properly executed Contract Documents, within seven (7) calendar days following the City Engineer's notification of intent to Award Contract, unless said time is extended by the City Engineer. All documents listed in the "List of Contract Documents" are required to be properly executed and submitted. No Work shall commence until the Contract Documents are properly executed and submitted and a Work Order has been issued by the City Engineer.

No Contract shall be binding on the City until it has been executed or ratified by the City and delivered to the Contractor.

107.03.02 – EXECUTION OF BONDS

The date blanks on the Bonds shall be left blank. The dates will be inserted by the City upon approval.

The Bidder shall require the attorney-in-fact executing the required Bonds on behalf of the Surety to affix thereto a certified and current copy of the power of attorney.

The provisions for the competitive Bidding of City Projects and the form of and requirements for the Bidding Documents are governed by the Charter and Ordinances of the City, the Oklahoma Competitive Bidding Act, Resolution #93-01 of June 22, 1993 and other City Policies as amended.

107.04 – FAILURE TO EXECUTE CONTRACT

Failure of the Bidder to properly execute and timely submit the required Contract Documents may be considered a default. By reason of such failure by the Bidder, the City at its option may: (1) award the Contract to another Bidder; and/or (2) enforce and collect the Bid Bond as liquidated damages, not as penalty, and/or (3) seek other legal or equitable relief as the City deems appropriate.

Notwithstanding any other or additional rights of the City, should the successful bidder fail to fully and properly execute and timely return the contract and bonds or fail to provide the required insurance and certificate within seven (7) days of notification of the award, the City may rescind the award and re-advertise for new or different bids.

SECTION 108 – SCOPE OF WORK

108.01 – INTENT OF PLANS, SPECIFICATIONS AND SPECIAL PROVISIONS

The Plans, Specifications and Special Provisions describe the Work or Project in accordance with the Bidding Documents. The Contractor shall perform all Work as provided in the Contract Documents and shall perform such necessary and incidental Work to complete the Project in a satisfactory and acceptable manner. The Contractor shall furnish all labor, materials, tools, equipment and incidental work necessary and will be responsible for acquiring, copying and distributing documents for the completion of the Project.

108.02 – PRE-WORK CONFERENCE

The City may hold a pre-work conference. The conference will be at a time and place established by the City Engineer. The Contractor must attend pre-work conferences and may include any superintendents and subcontractors.

108.03 – AMENDMENTS, CHANGE ORDERS AND FIELD CHANGES

The Contractor will be provided a minimum of one (1) record set of Contract Documents (executed documents). Additionally, the Contractor will be provided a minimum of three (3) reference sets of Plans, Specifications, Addenda, Amendments, Change Orders, and Field Changes. The Contractor shall have a set of Plans and Specifications available at the Project site at all times.

The City reserves the right to make changes in the Contract Documents, or the character of the Work as may be necessary to insure completion of the Project in the most satisfactory manner. The City reserves the right to alter the quantities of Work to be performed or the time for the Project completion. No such alterations shall waive or invalidate any condition or provision of the Contract Documents.

The Contract Documents may be changed only by an Amendment and/or Change Order as approved by the City or by Field Change as approved by the City Engineer.

All changes shall be in writing and shall, except in case of emergency, be approved by the City Council before the Work commences.

108.03.01 – AMENDMENTS

Amendments are changes to the Contract Documents that are based on Unit Bid Prices which were provided with the Bidding Documents. The Item Unit Quantity may be increased or decreased by any amount. Amendments are not subject to Contract cost limits set in the Oklahoma Competitive Bidding Act, 61 O.S. (1991) Section 121. Amendments shall be binding when approved by the City.

108.03.02 – CHANGE ORDERS

Change Orders are changes to the Contract Documents when a Lump Sum price was provided with the Bidding Documents or when a Unit Price has not been established for a particular item or items of Work. A Change Order may authorize an addition, deletion, or revision in the Work, authorize an adjustment of the Contract Price or adjust the Contract time. The cumulative amount of Change Orders shall not exceed the Contract cost limits set in the Oklahoma Competitive Bidding Act, 61 O.S. (1991) Section 121. Change Orders shall be binding when approved by the City.

Where an actual emergency exists, wherein the delay caused by submitting the Amendment or Change Order to the City for approval would jeopardize the interest of the City or the public, the City Engineer may approve the Amendment or Change Order in writing. However, Amendments or Change Orders approved by the City Engineer under the circumstances outlined above shall be submitted to the City for consideration as soon as practical.

Amendments and Change Orders submitted to the City for approval shall bear the approval of the City Engineer and shall be prepared in five (5) copies, distribution as follows:

A) Four (4) copies to the City
B) One (1) copy to the Consultant (Architect or Engineer)

Change Orders shall include the following:

A) Complete detail and scope of the Work contemplated.
B) Estimated cost of the Work as contemplated by the Change Order.
C) Complete justification.
D) Any time impact to the Work caused by the Change Order.
E) Statement as to whether the prices shown are Contract Bid prices or agreed prices.
F) Statement signed by the Contractor that he is willing to perform the Work at the prices

in the Amendment or Change Order.

108.03.03 – FIELD CHANGES
Field Changes are changes to the Contract Documents when Unit Prices were provided with the Bid and when the overall Contract amount is not changed. Field Changes shall be binding when approved by the City Engineer.
108.04 – POST CONTRACT AWARD SUBSTITUTIONS
Substitutions may be considered after the Award of Contract unless specifically prohibited in the Bidding Documents. However, any Bidder basing a Bid on a substitution not approved by pre-Bid Addendum does so at the risk of being required to provide the materials designated in the Bidding Documents.
The materials, products and equipment described in the Bidding Documents establish a standard of required function, dimension, appearance and quality to be met by any proposed substitution.
Substitutions must be submitted in writing to the City Engineer for approval. The Contractor shall submit any additional information required by the City for review of the substitution. The City reserves the right to accept or reject any Post Contract Award Substitutions.
SECTION 109 – CONTROL OF THE WORK AND MATERIALS
109.01 – WORK ORDER
All Work shall be accomplished under authority of a written Work Order issued by the City Engineer. No Work Order shall be issued until the required Contract Documents have been executed by the Contractor and approved by the City.
109.02 – AUTHORITY OF CITY ENGINEER
All Work shall be done under the supervision and approval of the City Engineer. The City Engineer shall be the final authority regarding all questions which arise, including, but not limited to, the following:

A) The quality and acceptability of materials furnished.
B) Work performed.
C) Manner of performance.
D) Rate of progress of the work.
E) Interpretation of the plans and specifications.
F) Acceptable fulfillment of the contract.
G) Compensation.
H) Mutual rights between contractors under these specifications and suspension of work.

The City Engineer shall have the right to establish any sequence or priority of operation in the interest of desirable cooperation with other Work.
The authority of the City Engineer shall be in writing and not be construed to waive, revise or modify Contract Documents.
109.03 – CONFORMITY WITH PLANS
All Work shall conform to the lines, grades, cross sections and dimensions shown in the Contract Documents. Any changes from the Contract Documents shall be accomplished by Amendments, Change Orders or Field Changes.
109.04 – ORDER OF CONSTRUCTION
Site Preparation - The site of work, where deemed necessary by the City Engineer, shall be cleared of trees, brush, fences, buildings and obstructions occupying space needed for construction operations. Provided that no building or structure partially encroaching on the right-of-way or located in such a manner as not to interfere with construction operations shall be moved unless specifically noted on the plans for removal or directed by the City Engineer to be removed. Salvaged material shall be stored as directed by the Engineer.
Access Road - Where work is not accessible from existing streets and roads, the Contractor shall prepare necessary roads and grade or otherwise smooth uneven terrain along the right-of-way so that material may be transported and power equipment moved to and operated on and along the site of the work. Any
work done under the foregoing requirements will be subject to the Engineer's approval.
When trenching or disturbing existing ground cover, unless otherwise directed by the Engineer,

the Contractor shall leave no more than nine hundred feet (900') maximum, or as designated by the Engineer, between backfilling operations and the complete restoration of paving, paving repairs, fencing, sodding, etc.
When temporary surfacing is provided for in the contract documents, the Contractor shall complete temporary paving repair immediately as soon as practical before adjacent work is completed.

109.05 – ADJUSTMENT OF EXISTING STRUCTURES AND UTILITIES

109.05.01 – GENERAL

The Contractor, at his expense, shall provide an electrical or mechanical device or use such other means he may select to locate any hidden utility line, oil or gas pipeline, water pipeline, sewer pipeline, telegraph and telephone line, and locate such lines or structures shown on the plans and any uncharted line or structure whether shown on the plans or not and protect, adjust to grade, disconnect and replace, relocate and replace, remove, provide supports during the construction and settlement of backfill and protect against freezing or unnecessary damage by the elements of existing utility lines, oil or gas pipelines, water pipelines, sewer pipelines, telegraph and telephone lines, railroad right-of-way lines and other structures and shall pay all fees to County, City, State or Federal agencies which may be required in the performance of this work.
The Contractor shall make satisfactory arrangements with the owners of such structures for performing the work. The Contractor shall not be entitled to any additional payment for such work under these specifications except where specific contract unit prices are provided in the proposal.
Where specific contract unit prices are not provided in the proposal, then such work shall be considered incidental to the construction except as hereinafter provided and where the City is legally liable for the payment of such cost in the construction work to be performed under these specifications, any cost involved shall be reflected in such other contract prices as are provided in the proposal.

109.05.02 – SEWER CONNECTIONS

The connecting of sewers or sewer appurtenances to other sewers or to sewer appurtenances shall be made in accordance with the plans or under the direction of the Engineer. The work shall be done in a workmanlike manner in such a way as not to damage any of the structures involved. No sewer shall project beyond the inside wall line of other sewers or of sewer appurtenances.

109.05.03 – SEWER GRADES

General - The grade line shown on the plans is the elevation of the invert or flow line of the sewer. The sewer grade shall be established by use of batter board, laser beam, or other methods approved by the Engineer.
Batter Boards - When batter boards are used they shall be set at grade stakes not farther than fifty (50) feet apart. Not less than three (3) batter boards shall be maintained in correct position continuously during the construction of the sewer. Batter boards shall be of good, straight, sound material, fastened to substantial stakes or uprights. Batter boards ten (10) feet or less in length shall not be smaller than one (1) by four (4), and when longer than ten (10) feet shall not be smaller than one (1) by six (6) or two (2) by four (4). Stakes shall not be smaller than two (2) by four (4). Steel stakes with suitable clamps may be used when approved by the Engineer.
A suitable fine cord or wire approved by the Engineer, shall be stretched tightly between batter boards over the exact centerline of the sewer. A graduated pole or rod shall be provided for measuring from the cord stretched between batter boards to the bottom of the trench while the trench is being prepared and to the sewer invert while the sewer is being placed. When the vertical distance from the cord between batter boards to the invert of the sewer exceeds ten (10) feet, a line shall be set at the bottom
of the trench for aligning the pipe and establishing the grade.
Laser Beams - When laser beams are used to establish line and grade, they shall first be calibrated in accordance with the equipment manufacturers recommended procedures. The Contractor shall establish horizontal and vertical controls (offset stakes) with a transit or theodolite. The Contractor may then proceed to establish line and grade using the laser equipment. In conjunction with the laser beam, the Contractor may also be required to provide

temporary benchmarks at intervals as specified by the Engineer.

109.06 – BORING TEST HOLE INFORMATION

Test hole information, when shown on the plans or included in the specifications, shall only represent subsurface characteristics to the extent indicated, and only for the point location of the test hole.

Each bidder shall make his own interpretation of the character and condition of the materials, which will be encountered, between test hole locations. Each prospective Bidder may, at his own expense, make additional surveys and investigations as he may deem necessary to determine conditions which will affect performance of the work.

109.07 – WATER USAGE

The Contractor may obtain from the City of Piedmont a flush meter for access to water hydrants for the purposes of cleaning and other work items requiring water. No fire hydrant shall be obstructed or used when there is a fire in the area. The Contractor shall be responsible for the water meter and all related set-up charges, including the water usage bill. All expenses shall be considered incidental.

109.08 – AUDIO-VIDEO RECORDING PRE- AND POST-CONSTRUCTION

These recordings will serve as a record of pre-construction and final conditions. All Audio Video recordings shall be recorded in a manner that logically follows the entire project path in a continuous manner. The audio-video record shall become the property of the City and shall be delivered prior to commencing construction and prior to final payment. Contractor must submit recording to the Engineer for review and approval.

A) Pre-construction Audio-Video Recording

The Contractor shall be required to record above ground topography and existing amenities located along project area before clearing and construction operations begin.

B) Post-Construction Audio-Video Recording

The Contractor shall be required to record above ground topography and existing amenities located along project area after construction is completed

C) Audio-Video Recording Quality

The Audio-video recording shall be in color and recorded digitally on DVD, or format as approved by the Engineer. The audio-video record shall be high quality and detailed enough to settle disputes that may arise.

If not specified with a pay item the cost of audio-video recording shall be included in other items.

109.09 – SEDIMENT AND EROSION CONTROL

The Contractor shall minimize the amount of land disturbed to minimize the loss of the sediment from the job site onto neighboring properties or into area waterways and streams. The most effective and direct means of controlling erosion during and after construction is to attain a good vegetative cover over all soil surfaces laid bare or disturbed. Permanent vegetative cover shall be established promptly after completion and acceptance of areas of work. Practices to minimize erosion and trap sediment carried by site runoff are to be utilized by the Contractor. All work shall comply with the Contractor's Erosion Control Plan.

The Contractor shall designate a full-time employee on the job site to be responsible for implementation of erosion and sediment control measures. The Contractor's designated employee shall inspect and document the condition of all erosion control structures on a weekly basis. In the event of rainfall in excess of one-half inch, an inspection of all structures shall be made within 24 hours of the one-half inch rainfall event.

109.09.01 - STORM WATER CONSTRUCTION ACTIVITIES PERMIT

When applicable, in order to be in compliance with the Environmental Protection Agency (EPA), Oklahoma Department of Environmental Quality (ODEQ) regulations, the City must ensure all construction activities within its corporate boundaries are in compliance under the following regulations.

Environmental Protection Agency

Code of Federal Regulations (40 CFR, Part 122)

Clean Water Act
Oklahoma Department of Environmental Quality
Oklahoma Pollutant Discharge Elimination System Act (OPDES) 27A O.S. 2-6-201
Piedmont Municipal Code
. The Contractor shall be required to follow the plans as submitted and approved at all times during construction of the project. The following note shall be on every plan submitted to the City of Piedmont:
Construction activities that result in land disturbance of equal to or greater than one (1) acre, or less than one (1) acre if they are part of a larger common plan of development or sale that totals at least one (1) acre must also obtain a permit from ODEQ (form 605-002a) for Storm Water Discharge from Construction Activities. This means that land disturbing of one (1) acre or more must permit with ODEQ.

109.10 – EXISTING STRUCTURES NOT SHOWN IN CONTRACT DOCUMENTS

The Contract Documents show the location of known surface and subsurface structures. The City assumes no responsibility for failure to show any or all structures on the Contract Documents or to show them in their exact location. No claim for Extra Work will be considered unless the unforeseen structures encountered necessitates substantial changes in the lines or grades or requires the building of a special structure for the Project to function as intended in the Contract Documents. Nothing herein shall relieve the Bidder of the responsibility to thoroughly inspect the proposed Work site prior to
submitting Bids.

109.11 – COORDINATION OF THE CONTRACT DOCUMENTS

The City's Standard Specifications shall govern all aspects of Bidding and construction of the Project. Exceptions or additions to the Standard Specifications will be set forth in the Special Provisions. The Standard Specifications are available for review or purchase in the City Clerk's Office. The Contract Documents as shown in Figure 100-1 describe the Work to be performed under the Contract. A requirement occurring in any of the Contract Documents is binding. In case of discrepancies the following shall apply:

A) Figured dimensions shall govern over scaled dimensions
B) Plans shall govern over Special Provisions and Standard Specifications
C) Special Provisions shall govern over Standard Specifications
D) Details, drawings and quantities shown on the Plans shall govern over quantities shown in the Detailed Bid Form.

The Contractor shall take no benefit from any apparent error or omission in the Contract Documents. The City Engineer shall be permitted to make necessary corrections or interpretations to fulfill the intent of the Contract Documents. The Contractor shall immediately notify the City Engineer of any apparent discrepancies or errors in the Contract Documents.

109.12 – COOPERATION OF CONTRACTOR

The Contractor shall give consistent attention to the Work and shall cooperate with the City Engineer and with other Contractors. The Contractor shall provide a competent superintendent on the Work site at all times who is fully authorized and in control of the Work. Such superintendent shall be capable of reading, thoroughly understanding the Contract Documents and shall receive and fulfill instructions from the City Engineer.
The Contractor shall provide all reasonable facilities to enable the City Engineer to inspect the Workmanship, materials and equipment entering into the Work.

109.13 – CONSTRUCTION STAKES

The Contractor shall provide all construction stakes in accordance with the City's Standard Specifications, Section 801 Construction Staking, unless otherwise provided in the Contract Documents.
Prior to commencing Work, the City Engineer will furnish the Contractor permanent horizontal alignment and vertical control points throughout the Work and permanent benchmarks within two hundred feet (200') of the beginning and the end of the Work limits. The City Engineer will also provide bridge centerline horizontal and vertical control points if applicable to the project. The Contractor shall have the sole responsibility for the preservation of all horizontal alignment and vertical control stakes, benchmarks and construction stakes. The Contractor shall, at its

own expense, replace any horizontal alignment, vertical control, construction stakes and benchmarks when damaged, lost, displaced or removed.

109.14 – MEASUREMENTS

Before ordering any material or doing any Work, the Contractor shall verify and be responsible for accuracy of all measurements. Errors, inconsistencies or omissions discovered shall be immediately reported to the City Engineer. No extra charge or compensation will be allowed due to any difference between actual dimensions and the measurements indicated on the drawings.

109.15 – SUBMITTALS AND SHOP DRAWINGS

The Contractor shall not start delivery of any materials until the City Engineer has approved any required submittals and shop drawings. Only materials conforming to the requirements of the Contract Documents shall be used in the Work.

The Contractor shall transmit a minimum of five (5) copies of each submittal and shop drawing to the City Engineer for review. Each transmittal shall be sequentially numbered and shall include the City's project number, Contractor's name, Specification number and all required information. The Contractor shall also affix its approval stamp to each submittal, shop drawing and product booklet. The approval stamp must certify that "the Contractor has determined and verified all dimensions, quantities, field dimensions, relations to existing work, coordination with work to be installed at a later date, coordination with information on previously approved submittals and verification of compliance with the Contract Documents". The accuracy of all information is the responsibility of the Contractor. The Contractor's approval stamp may be reviewed and approved by the City Engineer prior to use on the project.

In reviewing and approving submittals and shop drawings, the City Engineer is entitled to rely upon the Contractor's representation that all information is accurate and correct. The Contractor shall not be relieved of any responsibility for deviations, errors or omissions of the submittals and shop drawings by the approval of the City Engineer. Upon receipt, the City Engineer shall be allowed up to fourteen (14) days for review. Submittals and shop drawings that meet the requirements of the Contract Documents will be approved by the City Engineer. The City Engineer will retain at least four (4) copies and will return a minimum of one (1) copy of the submittal or shop drawing to the Contractor. Submittals and shop drawings that do not meet the requirements of the Contract Documents will be returned to the Contractor for correction and re-submittal. The date indicated on the City Engineer's transmittal letter shall be considered the date returned to the Contractor. The Contractor shall keep at least one (1) approved copy of all submittals and shop drawings at the Work site.

The Contractor shall furnish approved materials from other sources, if, for any reason, the product from any source at any time proves unacceptable.

109.16 – MATERIALS

109.16.01 – DELIVERY

Construction materials shall not be delivered to the work site more than three (3) days in advance of the start of construction. The contractor shall be held responsible for all construction materials delivered.

109.16.02 – MATERIALS AND CONSTRUCTION METHODS NOT SPECIFIED

Request for approval of other materials and construction methods not approved and specified herein shall be made in writing along with supporting documents, by the contractor, no later than seven (7) days before the bid opening date. If approved, an addendum shall be issued.

All oral, telephone, telegraph, or fax approval of materials are invalid and shall not receive any consideration.

109.16.03 – CONCRETE AND STEEL REINFORCEMENT

Unless otherwise specified, all concrete used in construction of sanitary sewers and their appurtenances shall have a minimum twenty-eight (28) day compressive strength of thirty-five hundred pounds per square inch (3,500 psi). All steel reinforcement used shall be grade sixty (60) with a minimum yield strength of sixty thousand pounds per square inch (60,000 psi).

109.16.04 – SAMPLES

The Contractor shall provide samples of materials, finish, appliances, etc., when required by the City Engineer and all such samples must be approved by the City Engineer in writing before the Work is executed. All Work shall conform in all respects to the approved samples. Any Work

that does not conform to the approved samples will be rejected and shall be removed and replaced by Work that does so conform.

109.16.05 – TESTS

The City Engineer will provide a test schedule for the Work and shall designate which samples must be taken or tests be conducted and which must be taken or conducted in the presence of an inspector. The City Engineer may require such additional tests, as necessary to the proper construction of the Project. All tests will be made in accordance with the appropriate Specifications. The Contractor shall provide such facilities as the City Engineer may require for collecting and forwarding samples. All tests shall be performed at a laboratory designated by the City. All costs of tests on materials that meet Specifications shall be at the expense of the City. All costs of tests that fail to meet the Specifications shall be at the expense of the Contractor. Upon written notification from the designated laboratory of failure to pay for failed tests, the City shall hold subsequent payment voucher claims from the contractor until verification has been provided of payment for failed tests. No claim for damages shall be made to the contractor for any delays associated with the resolution of payment for failed tests.

109.17 – MATERIALS CERTIFICATIONS

The Contractor, in all cases, shall furnish required samples without charge. A laboratory designated by the City shall perform all tests. When the Standard Specifications require testing of prefabricated products or any other materials, the City Engineer may waive local testing requirements in lieu of a certification from the manufacturer that the material or product furnished conforms to the appropriate Specifications as called for in the Standard Specifications.

109.17.01 – GENERAL REQUIREMENTS

The Contractor shall be responsible for obtaining all certifications and arranging for their delivery to the proper destinations as required by this specification. A responsible representative of the company that issues the certification shall sign materials certifications. The official company title of the signer must be clearly shown immediately beneath the Contractor's signature.
All certifications shall be furnished in duplicate and each copy shall show the following information:

A) City's Project Number
B) Name of Contractor
C) Identification Markings on Shipment
D) Quantity of Material Represented by the Certification

When certified mill tests are submitted as a Type A certification the quantity information need not be furnished provided that the identifying heat number is permanently rolled, stamped or otherwise permanently affixed to each individual piece of material in the shipment covered by the certification.

109.17.02 – TYPES OF CERTIFICATIONS

Unless otherwise specified, a certification shall be one of the following types:

A) Type A certification shall be prepared by the manufacturer and shall consist of a certified copy of a report covering tests conducted by an approved laboratory. Such tests shall have been conducted on samples obtained from the lot or lots of material in the shipment.

B) Type B certification shall consist of a certification prepared by the manufacturer and shall show the limits of test values as determined by an approved manufacturer's laboratory, a qualified commercial laboratory or other approved laboratory.

C) Type C certification shall be prepared by the manufacturer and shall certify that the material in the shipment conforms to the same formula and/or is essentially the same as the material previously approved by the City Engineer.

D) Type D certification shall be prepared by the manufacturer and shall state that the materials meet the applicable Specifications. These Specifications shall be listed by number, section reference or other appropriate identification acceptable to the City Engineer.

E) Type E certification shall be prepared by the fabricator to cover a composite item incorporating two (2) or more materials which have been previously approved on an individual basis for City Projects, but which lose their identity when they are incorporated into the composite item. All materials used in the fabrication shall be listed and identified. The

certification shall state that all materials used in the fabrication of the item in question were previously approved for City use. The fabricator shall keep test reports and/or other pertinent identifying records of the individual items incorporated into the composite item until the item has been approved and accepted by the City Engineer.

109.17.03 – DISTRIBUTION OF CERTIFICATIONS

Certifications shall be mailed in duplicate to:
City Engineer, City of Piedmont
Certifications for Project No. _____
P. O. Box 240, Piedmont, OK 73078
These certifications will be checked for conformance with the applicable Specifications.

109.17.04 – BASIS OF ACCEPTANCE

Whenever a certification as defined above is required or requested by the City Engineer, such material may be accepted on the basis of certification provided that all applicable requirements are met. Visual inspection at delivery and installation shows the Workmanship and condition of the material to be satisfactory.

All material furnished under certification shall be tagged, stenciled, stamped or otherwise marked with a lot number, heat number, order number, or other appropriate identification which can be readily recognized and checked against the certification. Material accepted on certification shall not be incorporated in the Work until the City Engineer has approved the certificates.

Testing shall be done only on written order of the City Engineer on test order forms provided by the City. Unless otherwise provided, nothing in these Specifications shall be construed as requiring a specific number of tests to be made. Except on Assessment Paving Projects, the minimum schedule of satisfactory tests, listed herein, will be furnished by the Contractor upon written order of the City Engineer and performed by a testing laboratory designated by the City. Tests for asphalt extraction and gradation, asphalt cement analysis and Hveem stability will be made only as directed by the City Engineer or as specified in the test schedule.

The reference made herein to the A.S.T.M., A.A.S.H.T.O. and O.D.O.T. are to establish a standard for quality of material and shall not be construed as requiring tests for compliance with these Specifications except on the written order of the City Engineer as provided above.

An example of the schedule of tests to be furnished by the Contractor is summarized as follows:

EXAMPLE SCHEDULE OF TESTS
ACCEPTANCE OF PLANT MIX ASPHALT CONCRETE PAVEMENT

Asphalt Extraction And Gradation	1000 tons Asphalt Pavement
Roadway Density Of Asphalt Mix	4 Per 2000 Tons Asphalt Pavement or as directed by the City Engineer
Hveem Stability Test And Density Of Molded Specimen	1 Per 2000 Tons Asphalt Pavement
Maximum Theoretical Specific Gravity Of Asphalt Mix	1 Per 2000 Tons Asphalt Pavement

A satisfactory test is defined as being a test that shows that the quality of the materials or Workmanship meets the requirements of the Specifications. Where tests reveal that the quality of the materials or Workmanship does not meet the requirements of the Specifications, additional tests shall be made as directed by the City Engineer until the number of satisfactory tests called for in the schedule have been
made. The reports of these tests shall constitute the evidence referred to above. The cost of all testing provided for in the schedule, including the furnishing and taking of all samples, shall be included in the Unit Prices Bid for the various items listed in the Bid.

The City Engineer may order tests in addition to the number provided for in the schedule to be made if, in his opinion, such additional tests are necessary. The cost of all tests ordered, in addition to the number of satisfactory tests provided for in the schedule, which show that the materials or Workmanship conform to the Specifications shall be paid for by the City. The

Contractor shall pay for all such tests that reveal that the materials or Workmanship do not conform to the Specifications.
In the event that any concrete cylinders on a Project have a compressive strength at twenty-eight (28) days of less than thirty-five hundred pounds per sq. inch (3500 psi) or as otherwise specified, the procedure as provided in Section 304 Portland Cement Concrete will apply and payment will be adjusted as provided. On all Work where the City is, or is not, a party to the Contract, the difference between the Contract price and the price as adjusted because of strength and/or thickness deficiencies shall be paid the City as liquidated damages to cover the higher cost of maintenance anticipated to result from slab so deficient. All costs of coring, testing of cores and repair of core holes, shall be borne by the Contractor.

109.17.05 – STORED MATERIALS

Stored materials shall be located and protected to preserve their quality and fitness for the Work. Materials shall be placed on wooden platforms or other hard, clean surfaces and not on the ground and shall be placed under cover as required. Stored materials shall be located to facilitate prompt inspection. The City assumes no responsibility for materials located on the site or off-site. The Contractor assumes full responsibility for any damage or loss to any stored materials. No stored material shall be located off-site unless approved by the City Engineer. Material located off-site shall be insured prior to payment for stored materials.
All aggregates shall be handled in such a manner as to preserve their quality, gradation and fitness for the work. The provisions for transporting aggregates shall be such to assure a continuous and adequate supply of material to the work. Aggregate stockpiles shall be built up in such a manner that acceptable materials will be delivered to the plant or the Project. Aggregates from different sources and different gradations shall not be stockpiled together. The gradation requirements, for the individual stockpiles and proportioning from the stockpiles, shall be the responsibility of the Contractor. Aggregates that have become segregated, or mixed with earth or other foreign material, shall be considered unacceptable, and will not be utilized in the work until Contractor causes aggregate piles to be integrated, and all foreign materials to be removed.

109.18 – INSPECTION

The City Engineer shall at all times have reasonable access and opportunity to inspect the Work. The Contractor will provide proper and safe access for all City and regulatory inspections. The City may maintain inspectors on the job site for the purpose of inspecting materials, equipment, Workmanship and conditions of Work. The Contractor shall notify the Public Works Director twenty-four (24) hours prior to:

Deleted: Field Services

A) Pouring Concrete
B) Covering Work
C) Working on waterlines and
D) At any other times required in the Special Provisions.

It is the Contractor's responsibility to arrange for and complete all inspections required by the City's Building, Plumbing, Electrical, Mechanical, Fire and Zoning Codes.
The Contractor shall at any time remove and uncover such portions of the finished Work as may be
directed by the City Engineer.

A) Should the Work prove acceptable, the cost of removing uncovering and restoring covered Work may be reimbursed to the Contractor. Payment may be paid as a Change Order.

B) Should the Work prove unacceptable, the cost of removing uncovering and restoring covered Work shall be at the Contractor's expense.

C) Any Work completed, covered up, or materials used without inspection by the City may be ordered uncovered, removed, replaced and covered at the Contractor's expense.

109.19 – REMOVAL OF DEFECTIVE AND UNAUTHORIZED WORK

All Work that has been rejected or condemned shall be removed and/or replaced at the Contractor's expense. The following items list causes for removal of Work:

A) Work completed without lines and grades;
B) Work performed beyond the lines or not in conformity with the grades shown in the

Contract Documents;

C) Work performed without proper inspection; and,

D) any extra or unauthorized Work done without written authority of the City Engineer.

The City Engineer shall, after giving written notice to the Contractor, have the authority to cause defective Work to be remedied or removed and replaced or to cause unauthorized Work to be removed and to deduct the cost thereof from any compensation due or to become due the Contractor. If the City deems it inexpedient to correct defective or unauthorized Work, an equitable deduction from the Contract amount shall be made.

109.20 – PUNCHLIST

The Contractor shall notify the City Engineer once all work has been completed in accordance with the Contract Documents. Upon completion, the Contractor must schedule a final walk-through of the project with the City Engineer.

The Contractor is required to generate the punch list which contains all items of work identified during the final walk-though not in conformance with the Contract Documents. The punch list will identify the date of issue, the City's project number, the Contractor's name and will describe in detail, in numerical order, all items of work that require correction, repair or replacement. A "corrected" column will be incorporated on the punch list for date and initial by the City Engineer to verify the correction.

All items of work recorded on the punch list must be corrected, repaired or replaced prior to Final Acceptance of the project by the City.

109.21 – FINAL INSPECTION

The Contractor shall advise the City Engineer when the Work is completed and ready for Final Inspection. The City Engineer shall make Final Inspection of all Work included in the Contract or any portion thereof as soon as practicable after the Work is completed and ready for Acceptance. If the Work is not acceptable to the City Engineer at the time of such inspection, the Contractor shall be informed as to the particular defects to be remedied before Acceptance can be made.

109.22 – FINAL CLEAN UP

Upon completion of the Project and prior to final Acceptance by the City, the Contractor shall clean and remove from the Work site surplus, discarded materials, temporary structures, stumps or portions of trees and debris of any kind. The Contractor shall leave the Work site in a neat and orderly condition acceptable to the City. Waste materials removed from the Work site shall be disposed of at locations satisfactory to the City Engineer and in compliance with Federal, State and City requirements.

109.23 – CORRECTION OF WORK AFTER FINAL PAYMENT

Neither the final certificate nor payment nor any provision in the Contract, Bonds or any other Contract documents shall relieve the Contractor of responsibility for faulty materials or workmanship and, unless otherwise specified, the Contractor shall remedy any defects due thereto and pay for any damage to other Work resulting there from, which shall appear within a period of one (1) year from the date of formal acceptance or duration of Maintenance Bond, whichever is longer, by the City. The City shall give notice of observed defects with reasonable promptness after discovery.

109.24 - FINAL ACCEPTANCE OF PRIVATE DEVELOPMENT PROJECTS

For final acceptance of private development projects, the contractor in addition to successful completion of all work items, punch list items, final clean-up, and final inspection, must submit a completed copy of the test schedule with results of all tests and copies of all applicable test reports to the City Engineer.

Deleted: Field Services Division

Failure to perform the required tests in compliance with these Standard Specifications and the test schedule will result in a penalty equal to three times the cost of each uncompleted test. The penalty amount for each uncompleted test will be based on the price under the City's annual testing contract.

SECTION 110 – LEGAL RELATION AND RESPONSIBILITY TO THE PUBLIC

110.01 – LAWS TO BE OBSERVED

The Contractor shall observe and comply with all Federal and State laws and regulations and all City Ordinances, Codes and regulations which in any manner affect the conduct of the Work.

The Contractor shall observe and shall comply with all existing orders and decrees or which may be issued. No plea of misunderstanding or ignorance will be considered.

110.02 – PERMITS AND LICENSES

The Contractor must secure, at its own cost, all permits, licenses and fees required by City ordinances, State statutes or Federal laws. Required permits, licenses and fees include, but are not limited to, building and other related permits, other fees, charges, taxes, licenses and inspections necessary for proper execution and completion of the Work. The Contractor is also required to give all notices necessary for the lawful prosecution of the work.

The Contractor must also secure, at its own cost, all certificates of inspection and occupancy that may be required by authorities having jurisdiction over the Work. No claims for delay may be made with reference to this section.

110.03 – PATENTED DEVICES, MATERIALS AND PROCESSES

If the Contractor is required or desires to use any design, device, material or process covered by letters, patent or copyright, the Contractor shall provide for such use by suitable legal agreement with the patentee or owner. The Contractor shall provide to the City Engineer a copy of any such agreement. The agreement shall be to the benefit of the City and the Contractor. The Contract prices shall include all royalties or costs arising from patents, trademarks and rights in any way involved in the Work.

110.04 – SANITARY PROVISIONS

The Contractor shall establish and enforce policies and procedures in regard to cleanliness and disposal of garbage and waste. The Contractor will prevent the inception and spread of contagious or infectious diseases about the Work or any public or private property. The Contractor shall construct (secluded from public observation), maintain and ensure the use of necessary sanitary conveniences for the use of laborers on the Worksite.

110.05 – PUBLIC CONVENIENCE AND SAFETY

The Contractor shall establish and implement safety measures, policies and standards conforming to those required or recommended by governmental authorities including, but not limited to, the requirements of the United States Occupational Safety and Health Act.

The Contractor shall take such special precautions for the safety of the Work and the traveling public as may be necessary, including, but not limited to, sheeting, bracing and thoroughly supporting the sides of any excavation and supporting and protecting any adjacent structures. The Contractor shall not cause an obstruction to the traveling public. The Contractor shall, at the Contractor's own expense, make provisions for the diversion of traffic and the traveling public. The City reserves the right to remedy, at the Contractor's expense, any neglect on the part of the Contractor regarding the public convenience and safety upon twenty-four (24) hours written notice regarding failure to respond. In cases of emergency, the City shall have the right to remedy without notice, at the Contractor's expense.

110.06 – STREETS, ALLEYS, OR RIGHTS-OF-WAY

Streets, lanes of streets, or alleys may be closed only upon the prior approval of the City Engineer. Should a street, lanes of streets, or alley closing be approved, the Contractor is responsible for notifying the City following at least twenty-four (24) hours in advance of the closing.

110.06.01 – DETOURS

The City Engineer may approve all detour routes during construction. The Contractor shall provide and maintain all detour routes, signs and devices which shall conform to the requirements of the "Manual on Uniform Traffic Control Devices."

110.06.02 – OCCUPYING STREETS, ALLEYS, RIGHT OF WAY OR CITY PROPERTY

a) During Work the Contractor will be allowed to occupy such portions of streets, alleys, rights-of-way or City Property as provided for in the ordinances of the City, the Contract Documents or as allowed by the City Engineer. The City Engineer may approve a reasonable amount of tools, materials and equipment for construction, which may be stored in such space but not more than is necessary to avoid delay in the construction. Streets, alleys, rights-of-way and/or City property shall be free and unobstructed at all times unless otherwise approved by the City Engineer, including, but not limited to, excavated and waste materials, stored materials,

equipment, etc. Other Contractors of the City may, as required by their Contracts, enter the Project. The Contractor shall provide other City Contractors all reasonable access and assistance for the performance of the adjoining Work. Any additional Project area desired by the Contractor shall be acquired at the Contractor's expense. The Contractor while in control of the project site shall maintain the site to be clean of trash and weeds or grass to be cut or mowed, acceptable to the City Engineer, at a minimum of every two weeks.

b) **USE OF CITY LAND & PROPERTY FOR STORAGE OR STAGING OPERATIONS ON PUBLIC CONSTRUCTION PROJECTS:**

The Contractor must obtain the prior written approval of the City Engineer to utilize any City property, easement, or right-of-way outside of the project site for construction storage or staging operations during the performance of public construction projects. Additionally, approval by the Director of the Parks and Recreation Department must be obtained prior to utilizing City park property.

The Contractor must request such approval by written correspondence. The correspondence must include a description of the requested storage or staging activity and a brief description of the property with a location map (aerial/topographic/pictures/diagrams) of the specific area for which the request is being made.

The City Engineer with the Director of Parks and Recreation, where applicable, is authorized to grant permission and to negotiate and establish the consideration received by the City. Construction storage includes storage of construction materials, excavation materials, equipment, and vehicles to the extent and upon the conditions set by the City Engineer; provided all materials, equipment and vehicles must be removed upon completion of the project and all reparations and restoration of the property must be completed within ten working days of the completion of the project. This policy does not authorize the use of City property, easement, or right-of-way for private projects.

If approval is granted, the following requirements shall be adhered to by the Contractor:

1. No vehicular traffic or stockpiling of equipment, soil or other materials within the drip line of mature trees or within five (5) feet of the water pan for young trees. The drip area of trees is to be protected by a safety fence.
2. Unless otherwise directed, the Contractor shall repair disturbed land with approved slab sod on top of a prepared subgrade. Random excavation material will not be allowed in lieu of topsoil. The Contractor shall be responsible for watering the sod until approved growth has been established to the satisfaction of the City Engineer.
3. Approval by the City shall be received prior to all tree trimming.
4. Contractor shall restrict all construction operations to occur within the boundary of "planned construction limits". No staging or parking will be allowed outside of the planned construction limits. Any variance to the construction limits must be approved by the City Engineer.
5. Total area required for staging (including parking of all contractor equipment, material storage, employee parking , job shack, etc.) must be secured by fencing for the protection of park uses outside of the staging area and to clearly delineate the approved area.
6. Construction or equipment fluids must not be drained onto the ground. Any resulting spills must be completely mitigated by removing the contaminated soil, replacement with quality top soil, and completely solid slab sodded.
7. The area inside of the "staging area" must be regularly maintained by the contractor. This means all litter must be picked up and removed, kept from encroaching out onto the park, and the area mowed and trimmed as necessary.
8. Any storage of dirt should be protected by silt fence.
9. Any gravel storage areas must be completely cleaned of any gravel debris so that none remains to become projectiles from mowing/ trimming activities.

Any disturbed areas (equipment parking areas, haul roads, storage areas, etc.) must be disked to a depth of 8 inches to alleviate compaction and completely solid slab sodded. No seeding,

sprigging, or hydro-mulching will be allowed. Newly sodded areas must be completely watered in and viable upon inspection prior to turning back over to the City.

110.06.03 – BARRICADES AND WARNING SIGNS

Where Work is performed adjacent to or on any street, alley, right-of-way, or public place the Contractor shall at its own expense, furnish, erect and maintain barricades, fences, lights, warning signs and signals. The Contractor shall provide such flagman or watchmen and take such other precautionary measures for the protection of persons or property and of the Work as may be necessary. A sufficient number of barricades shall be erected to keep pedestrians and vehicles from entering on or into the Project. From sunset to sunrise, the Contractor shall furnish and maintain at least one operating light on each barricade. All devices shall also be in conformance with the "Manual on Uniform Traffic Control Devices."

The Contractor shall provide a twenty-four (24) hour phone number to the City to be used for notification to promptly repair signs, barricades, other warning or control devices. Failure to comply with these requirements may result in the issuance of a Stop Work Order until the deficiencies are corrected.

The City reserves the right to remedy any neglect on the part of the Contractor regarding the public convenience and safety, upon twenty-four (24) hour written notice. In cases of emergency, the City shall have the right to remedy without notice at the Contractor's expense.

110.07 – RAILWAY CROSSINGS

When the Project encroaches upon any railway right-of-way, the City will secure for the Contractor all the necessary Contracts and/or easements of authority to enter upon such right-of-way for the prosecution and completion of the Project. If the Project area is occupied by railway tracks, the Work shall be carried on in such manner as not to interfere with the railway operation. Where railway tracks are to be crossed, the railway company, may construct the necessary bridges, trestles, cribs or other structures for the safe operation of trains or cars across any excavation during the time or construction of the Work. The cost of the construction of such bridges, trestles, cribs or other structures shall be paid to the railway company by the Contractor. This cost shall include the necessary cost of any supervision or other incidental expenses that may be required by the railway company while the Work is in progress on the right-of-way of the railway company. The Contractor submitting a Bid shall take all railway coordination costs into consideration.

The Contractor shall coordinate and cooperate with the City and Railway in all ways possible to complete the Project. In case of delay due to the railway coordination, only an extension of time may be considered.

110.08 – USE OF EXPLOSIVES

Should the Contractor elect to use explosives for any purpose in the prosecution of the Work, all affected or concerned City departments and all utility companies shall review the type of explosive to be used and proposed use.

Prior to any blasting, the Contractor shall receive written permission of the City Fire Chief and the City Engineer. Written permission shall not be issued until the Contractor obtains a release from all utility companies. Prior to any use of explosives, the Contractor shall notify the proper representative of all utility companies having service connections within the area. This notification shall include the date, time and location.

The City Fire Chief and the City Engineer may require detailed information on all progress toward the use of explosives and may require additional safety precautions.

All precautions shall be taken by the Contractor as required by the City and the State relative to use of explosives. Necessary provisions shall be made for the protection of the Project. All use of explosives shall be conducted to protect persons or property. The Contractor shall keep only sufficient quantities of explosives necessary for the immediate day's Work on hand. Storage of explosive devices shall be

done strictly in compliance with applicable laws, industry standards and/or as directed by the City Engineer.

110.09 – PROTECTION AND RESTORATION OF PROPERTY

The Contractor shall not enter upon private property for any purposes without first obtaining permission from the property owner. The Contractor shall be responsible for the preservation of

public or private property. The Contractor shall use every precaution necessary to prevent damage to all trees, fences, culverts, bridges, pavements, driveways, sidewalks, etc., and to all water, sewer, gas or electric lines or appurtenances thereof and to all other public or private property along or adjacent to the Work. The Contractor shall notify the proper representatives of any public utility, any company or any individual not less than twenty-four (24) hours in advance of any Work which might damage or interfere with the operation of their property, along or adjacent to the Work. The Contractor shall be responsible for all damage or injury to property of any character resulting from any act, omission, neglect or misconduct in the manner or method of executing the Work. The Contractor shall be responsible for the non-execution of the Work and any time due to defective Work or materials and said responsibility shall not be released until the Work is completed and accepted. When and where any direct or indirect damage or injury is done to public or private property on account of any act, omission, neglect or misconduct in the execution of the Work the Contractor shall restore the property at the Contractor's expense.

The Contractor shall be responsible for the consequence of the non-execution of the Contract and shall restore at the Contractor's own expense such property to a condition similar or equal to that existing before such damage or injury was done. The Contractor shall repair, rebuild or otherwise fix the property as may be directed, or the Contractor shall make good such damage for injury in an acceptable manner.

In case of the failure on the part of the Contractor to restore such property or make good such damage or injury, the City Engineer may, upon forty-eight (48) hours written notice, under ordinary circumstances, proceed to restore such property. The City Engineer may without notice restore such property when a nuisance or hazardous condition results. The cost for the City's Work will be deducted from any monies due or to become due the Contractor under the Contractor's Contract.

110.10 – PROTECTION AND PRESERVATION OF LAND MONUMENTS AND PROPERTY LINE MARKS

The Contractor shall protect carefully from disturbance or damage all land monuments and iron pins or other markers that establish property or street lines. Where such monuments or markers must, of necessity, be disturbed or removed in the performance of the Contract, the Contractor shall first give ample notice to the City Engineer, so replacement of such monuments or markers may be witnessed or referenced by the City Engineer. Should the Contractor disturb, remove or damage any established land monument or property or street line mark without first giving the City Engineer ample notice, the City Engineer may deduct the cost of re-establishing such monuments or marks from any monies due or to become due the Contractor.

110.11 – RESPONSIBILITY FOR DAMAGE CLAIMS

The Contractor and the Contractor's Surety shall defend, indemnify and save harmless the City and any applicable Trusts and all its officers, agents and employees from all suits, actions or claims of any character, name and description brought for or on account of any injuries or damages received or sustained by any person or persons or property by or from the said Contractor or employees or by or in consequence of any negligence in safe-guarding the Work or through the use of unacceptable materials in constructing the Work or by or on account of any act or omission, neglect or misconduct of the Contractor or by or on account of any claim or amounts recovered by an infringement of patent, trademark or copyright, or from any claims or amounts arising or recovered under the Workmen's Compensation Law or any other law, ordinance, order or decree and so much of the money due the said Contractor under and by virtue of the Contractor's Contract as shall be considered necessary by

the City may be retained for the use of the City or in case no money is due, the Contractor's Surety shall be held until such suits or suit, action or actions, claim or claims, for injury or damage as aforesaid shall have been settled and satisfactory evidence to that effect furnished to the City. Provided, however, the Contractor need not release, defend, indemnify or save harmless the City of Piedmont or their officers, agents and employees, from damages or injuries resulting from the sole negligence of the officers, agents or employees of the City of Piedmont.

110.12 – CONTRACTOR'S CLAIM FOR DAMAGES

Should the Contractor claim compensation for any alleged damage by reason of the acts or omissions of the City, he shall within ten (10) days after the sustaining of such damage, make a

written statement to the City Engineer setting out in detail the nature of the alleged damage. On or before the 25th day of the month succeeding that in which any such damage is claimed to have been sustained, the Contractor shall file with the City Engineer an itemized statement of the details and amount of such damage and upon request shall give the City Engineer access to all books of account, receipts, vouchers, bills of lading and other books or papers containing any evidence as to the amount of such damage. Unless such statement shall be filed as thus required, the Contractor's claim for compensation shall be waived and he shall not be entitled to payment on account of any such damage.

110.13 – PUBLIC UTILITIES AND PUBLIC PROPERTY TO BE CHANGED

The Contractor shall not prevent free access to all utilities or emergency devices, services and access. The cost of adjusting water mains or services to grade shall be included in the Bid prices except where a specific item for this Work is included in the Bid.

An effort has been made to locate and show on the Plans, existing utilities. Should the Contractor encounter any utilities whether or not shown on the Plans, it will be the Contractor's responsibility to protect the liens during construction. If there is any interference from alignment or elevation, it will be the responsibility of the Contractor to have these utilities relocated to permit construction to continue. All necessary relocation or adjustment of utilities will be accomplished without expense to the Contractor except when otherwise provided in the Special Provisions or included in the Project. The Contractor shall be required to coordinate the Contractor's Work with that of the utility companies or the City so that the relocation or adjustment of utilities and the Work on the Project can proceed in an orderly and timely manner. Any damage to new or existing utilities or other facilities on the Project site shall be repaired by the Contractor in accordance with the provisions of the Contract or as directed by the City Engineer. No additional payment will be allowed for such Work. It shall be the responsibility of the Contractor to be fully informed as to the extent of the limits of the Work to be performed by other Contractors of the City and to coordinate this Work with them. Should there be any conflicts as to the limits or staging of the Work, the matter shall be presented to the City Engineer or representative and any decision thereon shall be final.

Traffic signals and appurtenances are not located by the OKIE one-call system. Contractor must call public works department at Piedmont.

BEFORE YOU DIG CALL OKIE.

How to use CALL OKIE.

1. Contractor dials CALL OKIE CENTER.
2. Operator at center records necessary information, tells caller who will be notified and gives caller the Locate Request Number.
3. Locate Request message is transmitted by computer to owners of utilities.
4. Location of facilities is marked at site by owners:

Statewide 1-800-522-6543
Out-of-state 1-800-654-8249

110.14 – TEMPORARY SEWER AND DRAIN CONNECTIONS

When existing sewers have to be taken up or removed the Contractor at the Contractor's own expense, shall provide and maintain temporary outlets and connections for all private or public drains, sewers or sewer inlets. The Contractor shall take care of all sewage and drainage that will be received from these drains, sewers and sewer inlets; and for this purpose the Contractor shall provide and maintain at the Contractor's expense, adequate pumping facilities and temporary outlets or diversions. The Contractor shall construct such trough, pipe or other structures necessary and be prepared at all times to dispose of drainage and sewage received from these temporary connections until such time as the permanent connections are built and in service. The existing sewers and connections shall be kept in service and maintained under the Contract, save where specified or ordered to be abandoned by the City Engineer. All water or sewage shall be disposed of in a satisfactory manner so that no nuisance is created and that the Work under construction will be adequately protected.

110.15 – ARRANGEMENT AND CHARGE FOR WATER FURNISHED BY THE CITY

If the Contractor desires to use City water, the Contractor shall pay the rate established by City

ordinance for such service and shall make complete and satisfactory arrangements with the City Water Department for so doing. Meters will be used and the Contractor shall deposit the cost of the water meter with the Water Department and will pay for all repairs and maintenance of the meter for the period which he has the meter in the Contractor's possession.

110.16 – USE OF FIRE HYDRANTS

The Contractor or employees shall not open, turn off, interfere with, attach pipe or hose to, or connect anything with any fire hydrant, stop valve, or stop cock or tap any water main belonging to the City, unless duly authorized to do so by the Water Department.

110.17 – USE OF A SECTION OR PORTION OF THE WORK

Whenever, in the opinion of the City Engineer, any portion of the Work or any structure is in suitable condition, the suitable portion may be put into use by the written order of the City Engineer. Such usage shall not be held to be in any way Acceptance of said Work or structure or any part thereof. The usage of a portion of the Work in use is not a waiver of any of the provisions of these Specifications of Contract. Pending Final Acceptance of the Work, all necessary repairs and renewals on any section of the Work so put into use due to defective material or Workmanship, to natural causes other than ordinary wear and tear or to the operations of the Contractor, shall be performed by and at the expense of the Contractor.

110.18 – CONTRACTOR'S RESPONSIBILITY FOR THE WORK

110.18.01 – GENERAL

Until Final Acceptance by the City, the Work shall be under the charge and care of the Contractor. The Contractor shall take every necessary precaution to prevent injury or damage to the Work or any part thereof by the action of the elements or any other cause whatsoever, whether arising from the execution or non-execution of the Work. The Contractor shall at the Contractor's own expense rebuild, repair, restore and make good all injuries or damage to any portion of the Work occasioned by any of the foregoing causes before Final Acceptance of the Work by the City.

110.18.02 – SAFETY AND OSHA RULES AND REGULATIONS

All work shall be done in conformance with applicable Occupational Safety and Health Administration (OSHA) Rules and Regulations.

110.19 – PERSONAL RESPONSIBILITY OF PUBLIC OFFICIALS

In carrying out any of the provisions contained herein or in exercising any power or authority granted to him by the Contract, there shall be no liability upon the City Engineer or authorized assistants, either personal or as officials of the City, it being understood that in such matters he acts as the agent and representative of the City.

110.20 – WAIVER OF LEGAL RIGHTS

Inspection by the City Engineer or by any of his duly authorized representatives, any order, measurement, or certificate by the City Engineer, any order by the City for the payment of money, any payment for or Acceptance of any Work or any extension of time or any possession taken by the City, shall not operate as waiver of any provisions of the Contract or any power therein provided. Any waiver of any breach of Contract shall not be held to be a waiver of any other or subsequent breach. The City reserves the right to correct any error that may be discovered in any estimate that may have been paid and to adjust the same to meet the requirements of the Contract and Specifications. The City reserves the right to claim and recover by process of law sums as may be sufficient to correct any error or errors or make good any deficiency in the Work resulting from such error or deficiency, dishonesty or collusion discovered in the Work after the final payment has been made.

110.21 – INDEMNIFICATION

The Contractor shall indemnify, defend and save harmless the City and any participating public trust from any and all losses, expenses, costs, damages, penalties, or any injuries, including death, directly or indirectly resulting from acts or omissions of the Contractor and its agents, employees, and subcontractors and/or from any penalties for violation of any law, ordinance or regulation by the Contractor and its agents, employees, and subcontractors. The presence of or inspections by employees or agents of the City and or participating public trust shall not limit, affect, waive, release, or extinguish any duty, obligation, or responsibility of the Contractor. The obligations imposed by this paragraph shall not be limited, affected, waived, or extinguished by any obligation to provide insurance or by the provision or procurement of insurance.

110.22 – CONTRACTOR'S INSURANCE

(a) During the entire term of the Contract (from the approval of the Contract to the final acceptance of the fully completed project by formal action of the City) and for such additional period thereafter as specifically required herein, the Contractor shall provide, pay for, and maintain the following types of insurance:

(i) Worker's Compensation. The Contractor must maintain, during the term of the Contract, Worker's Compensation Insurance as prescribed by the laws of the State of Oklahoma, and Employer's Liability Insurance for all of its employees at the project sites. If any work is subcontracted, the Contractor shall require the subcontractor similarly to provide Worker's Compensation and Employer's Liability Insurance for all the subcontractor's employees at the project sites, unless such employees are covered by the insurance purchased by the Contractor. In the event any class of employees engaged in work performed under the Contract or at the project sites are not protected under such insurance heretofore mentioned, the Contractor shall provide or shall cause each subcontractor to provide adequate insurance for the protection of the employees not otherwise protected.

(ii) Commercial General Liability Insurance. Contractor shall carry a policy of commercial general liability insurance. If the Contractor's Commercial General Liability coverage is written in a "claims-made" form, Contractor shall also provide tail coverage that extends a minimum of two years from the expiration of this Contract.

(iii) Automobile Liability Insurance. The Contractor shall maintain insurance coverage as to the ownership, maintenance, and use of all owned, non-owned, leased or hired vehicles.

(b) The Contractor must carry and maintain the required insurance policies and may not canceled, fail to be renewed, nor decrease its limits without 30 days written notice to the City and any participating public trust. The Contractor must provide properly executed Certificates of Insurance evidencing insurance coverage as required by the Contract for this project. The Certificates of Insurance must specifically state the project number and description. An authorized representative of the insurance companies listed on the Certificates of Insurance must sign the Certificates. The Contractor must attach to the Certificates of Insurance such documentation as will demonstrate the authority of the insurance agent to sign the Certificates. Additionally, the Contractor must provide a covenant from the insurance agent that the insurance agent will provide to the City and any participating public trust 30 days advanced written notice prior to any cancellation, lapse, reduction, limitation, or non-renewal of any insurance coverage or policy required for this project. The Contract will provide the Certificates of Insurance to the City with its signed Contract and Bonds. The City Engineer will not issue Notice to Proceed and the Contractor may not commence work or occupancy of the project sites until the required Certificates of Insurance have been received and verified, however, working days may commence and may accrue or be accruing pending presentation of the required insurance certificates and documentation and the effectuation of the required insurance coverage. Certificates of Insurance must be standard industry forms, such as ACORD, or in the form included in these specifications.

(c) The minimum liability coverage for each liability and each property insurance policy shall not be less than the greater of the following amounts: (i) $1,000,000, (ii) the cumulative maximum liability limit for the City and each participating public trust under the Governmental Tort Claims Act (51 O.S. §§151 et seq.), or (iii) the minimum amount required by the Contractor's prequalification classification. All liability and property policies as to which the City is not a named insured must, to the extent allowed by law, provide an endorsement or appropriate coverage language to make the City and any participating public trust "additional insureds." The required policies of insurance must be enforceable in Oklahoma and will be construed in accordance with the laws of the State of Oklahoma.

(d) In the event of a reduction in any aggregate insurance coverage or limits below the coverage required by this specification, the Contractor shall take immediate steps to have the full amount of the required insurance coverage reinstated. If at any time the City requests a written statement from the insurance company(s) as to any impairments to the aggregate coverage or limits, the Contractor hereby agrees to promptly authorize and have delivered to the City such statement. The Contractor shall remove or cover any impairment to insurance coverage as soon as known to it. The Contractor authorizes the City to confirm with the Contractor's insurance agents, brokers, surety and insurance carriers all information necessary to confirm or evidence the Contractor's compliance with bonding and insurance requirements. The Contractor's insurance coverage shall be primary to any insurance or self-insurance program carried by the City or any participating public trust.

(e) Any deductibles or self-insured retentions in excess of $25,000, or any other risk-management scheme other than a fully insured program of commercial general liability and automobile liability insurance must be declared by the Contractor prior to contract award and must be addressed to the satisfaction of the City and any participating public trust in advance of contract award. At the option of the City and any participating public trust, the Contractor may be required to: (1) reduce or eliminate such deductibles or to establish self-insured retentions with respect to the liability coverage for the City and any participating public trust, or (2) procure and provide a bond or irrevocable letter of credit guaranteeing payment to the City and any participating public trust for claims, losses, expenses, and
other related costs of investigations, claims administration, and defense expenses not otherwise covered by Contractor's insurance because of deductibles or self-insurance retentions, or (3) provide owner's protection liability coverage with the City and any participating trust as the named insureds, for the commercial general liability requirement, in a combined single-limit bodily injury and property damage amount of One Million Dollars ($1,000,000.00).

(f) All insurance policies shall be issued by insurance companies licensed and authorized to do business in Oklahoma with an A.M. Best rating of A- VII or better. The Contractor must timely provide to the City certified, true, and exact copies of all insurance policies required for this project whenever requested by the City. In addition, Contractor must require each insurance company that issues a certificate of insurance to the City to provide a copy of the policy to the City upon request.

110.23 – BUILDER'S RISK INSURANCE

On all building projects the successful bidder will provide Builder's Risk Insurance (all risk coverage for building or facility construction and renovation projects). The Contractor shall procure and shall maintain, during the term of the Contract, builder's risk insurance (broad form coverage, including theft, fire coverage on building construction or renovation) in the amount of one hundred percent (100%) of the construction cost. Such insurance shall remain in effect until 11:59 p.m. on the date of final acceptance of the entire fully completed project by formal action of the City, whether or not the project is substantially completed or whether or not the building or some part thereof is occupied in any manner prior to final formal acceptance. The Contractor shall be named as insured and the City and any participating public trust (as their interests may appear) shall be named as additional insureds. The coverage shall provide protection for the Contractor, the City, and any participating public trust, respectively, against property damage and damage claims which may arise from activities, omissions, or operations by the Contractor or its subcontractors under the Contract and also against any of the special hazards which may be encountered by the Contractor or its subcontractors in the performance of the Contract. Neither the Contractor nor any of its subcontractors, employees, or agents shall commit any act, operation, or omission that would vitiate, invalidate, or impair the insurance coverage hereunder. The insurance coverage must also include all stored materials, supplies, and equipment when stored off site.

110.24 – LIENS

Neither the final payment or any part of the retained percentage shall become due until the Contractor, if required, delivers to the City a complete release of all liens arising out of this Contract. The Contractor may, if any subcontractor refuses to furnish a release or receipt in full,

furnish a Bond satisfactory to the City, to indemnify him against any lien. If any lien remains unsatisfied after all payments are made, the Contractor shall refund to the City all monies that the City may be compelled to pay in discharging such a lien, including all costs and a reasonable attorney's fee.

SECTION 111 – PROSECUTION AND PROGRESS

111.01 – SUBLETTING OF WORK

The City will not recognize any subcontractor on the Work. The Contractor shall not employ any subcontractor on the Work without prior written approval of the City Engineer. The Contractor shall at all times when Work is in operation be represented either in person or by a qualified superintendent or other qualified designated representative. If the Contractor sublets any part of the Work the Contractor will not, under any circumstances, be relieved of the Contractual responsibility and obligations. All communication of the City Engineer shall be with the Contractor. Subcontractors will be considered only in the capacity of employees or Workmen and shall be subject to the same requirements as to character and competency of the Contractor.

111.02 – ASSIGNMENT OF CONTRACT

The Contractor shall not assign, transfer, convey or otherwise dispose of the Contract or right, title or interest in or to the same or any part thereof without the previous consent of the City Engineer in writing, approved by the Council and concurred in by the Surety. If the Contractor does, without such previous consent, assign, transfer, convey, sublet or otherwise dispose of the Contract or of the Contractor's right, title or interest therein or any part thereof to any person or persons, partnership, company, film, or corporation, or by bankruptcy, voluntary or involuntary, or by assignment under the insolvency laws of any state, attempt to dispose of the Contract or make default in or abandon said Contract, then the Contract may, at the option of the City, be revoked and annulled unless the Surety shall successfully complete said Contract and any monies due or to become due under said Contract shall be retained by the City as liquidated damages for the reason that it would be impracticable and extremely difficult to fix the actual damages.

111.03 – PROSECUTION OF WORK

111.03.01 – GENERAL

The Contractor shall perform the Work under the Contract within the time limit stated in the Notice to Proceed, Bid and Contract and shall conduct the Work in such a manner and with sufficient equipment, materials and labor as is necessary to insure its completion within the time limit set forth in the Advertisement, Bid and Contract. The sequence of all construction operations shall at all times be as directed by or approved by the City Engineer. Should the prosecution of the Work for any reason be discontinued by the Contractor, he shall notify the City Engineer at least twenty-four (24) hours in advance of resuming operations.

111.03.02 – PROJECT SCHEDULE

As directed by the Engineer, the Contractor shall furnish the Engineer with a tentative schedule, in Microsoft Project, Excel, Primavera, or any other format, setting forth in detail the procedure he proposes to follow, and giving the dates on which he expects to start and to complete separate portions of the work. If at any time, in the opinion of the Engineer, proper progress is not being maintained, such changes shall be made in the schedule of operations which will satisfy the Engineer that the work will be completed within the period stated in the proposal, or extension thereof made as herein provided. The schedule shall be updated monthly by the Contractor and submitted to the Engineer for review and approval. Failure to provide monthly updates (or as directed by the Engineer) to the schedule will result in a delay of processing the payment until the update is received, reviewed and accepted.

Before work begins, the Contractor shall prepare a project schedule and submit the same to the City for approval. The project schedule shall be submitted at the time of pre-work conference. This project schedule shall show the order in which the Contractor proposes to build all items of work included in the contract. After approval of the project schedule, the Contractor shall notify the City of his intent to start each of the various portions of the work included in the project schedule not less than seven (7) days prior to commencement thereof.

111.04 – LIMITATION OF OPERATIONS

The Contractor shall conduct his Work so as to create a minimum amount of inconvenience to

the public. At any time when in the judgment of the City Engineer the Contractor has obstructed or closed or is carrying on operations on a greater portion of the street or public way than is necessary for the proper execution of the Work, the City Engineer may require the Contractor to finish the section on which Work is in progress before Work is started on any additional section.

111.05 – CHARACTER OF WORKMEN AND EQUIPMENT

The Contractor shall employ such Superintendents, Foremen and workmen as are careful and competent. The City Engineer may demand the dismissal of any person or persons employed by the Contractor, in, about or on the Work who misconducts himself, or to be incompetent or negligent in the

proper performance of his or their duties. Neglect or refusal to comply with the directions of the City Engineer may result in the dismissal of the employee. Such person or persons shall not be employed on City Work again without the written consent of the City Engineer. Should the Contractor continue to employ or again employ such person or persons without the written consent of the City Engineer, then the City Engineer may withhold all monies which are or may become due or may suspend the Work until such orders are complied with.

All employees shall have sufficient skill and experience to properly perform the Work assigned them. All employees engaged on special Work or skilled Work or in any trade shall have sufficient experience in such Work to properly and satisfactorily perform it and operate the equipment involved and shall make due and proper effort to execute the Work in the manner prescribed in these Specifications. Otherwise, the City Engineer may take action as above prescribed.

In the employment of labor, preference shall be given, other conditions being equal, to bona fide residents of the City of Piedmont, but no other preference or discrimination among citizens of the United States shall be made.

The Contractor shall furnish such equipment as is considered necessary for the prosecution of the Work in an acceptable manner and at a satisfactory rate of progress. All equipment, tools and machinery used for handling materials and executing any part of the Work shall be subject to the approval of the City Engineer and shall be maintained in a satisfactory Working condition. Equipment on any portion of the Work shall be such that no injury to the Work or adjacent property will result from its use.

111.06 – DAY'S WORK AND WORKING HOURS

Work shall be done only during regular and commonly accepted and prescribed working hours. No Work shall be done nights, Saturdays, Sundays or regular holidays unless a special order or Permit is given by the City Engineer to do so. Eight (8) hours shall constitute a day's Work and the Contractor shall observe all State laws and City ordinances governing the hours of Work.

111.07 – TIME OF COMMENCEMENT AND COMPLETION

If the satisfactory execution and completion of the Contract should require Work or materials in greater amount or quantities than those set forth in the Contract, then the Contract time may be increased by the City Engineer. No allowance shall be made for delays or suspensions of the prosecution of the Work due to the fault of the Contractor.

The Contractor shall perform the Work within the time specified in the Notice to Proceed, Bid and Contract and the rate of progress shall be such that the whole Work will be performed and the premises cleaned up in accordance with the Contract, Plans and Specifications within the time limit, where such time limit is stated in the Notice to Proceed, Bid and Contract, unless an extension of time be made in the manner hereinafter specified.

111.08 – EXTENSION OF TIME OF COMPLETION

The Contractor shall be entitled to an extension of time, as provided herein only when claim for such extension is submitted to the City Engineer in writing by the Contractor within seven (7) days from and after the time when any alleged cause of delay occurs. Only when such claim is approved by the City Engineer and the Council or Contracting Public Entity. In adjusting the Contract time for the completion of the Projects, all strikes, lockouts, unusual delays in transportation or any condition over which the Contractor has no control and also any suspensions ordered by the City Engineer for causes not the fault of the Contractor, shall be excluded from the computation of the Contract time for completion of the Work. If the satisfactory execution and completion of the Contract should require Work or materials in greater amount or quantities than those set forth in the Contract, then the Contract time shall

automatically be increased in the same proportion as the cost of the additional Work contracted for. No allowance shall be made for delays or suspension of the prosecution of the Work due to the fault of the
Contractor.

111.09 – FAILURE TO COMPLETE WORK ON TIME

The time of completion is of the essence of the Contract. For each Working Day that any Work shall remain uncompleted after the time agreed upon in the Bid and the Contract, or as automatically increased by additional Work or materials ordered after the Contract is signed, or the increased time granted by the City for the completion of said Work, the sum per day given in the following schedule, unless specified otherwise in the Bid or Special Provisions, will be deducted from the monies due the Contractor, not as a penalty but as liquidated damages.

Minimum Amount of Contract	Amount of Liquidated Damages per Day
Less than $100,000	$300.00
$100,000 and less than $1,000,000	$400.00
$1,000,000 and over	$500.00 or up to 0.052% of the contract price per day

The sum of money thus deducted for such delay, failure or non-completion is not to be considered as a penalty but should be deemed, taken and treated as reasonable liquidated damages since it would be impracticable and extremely difficult to fix the actual damages.

111.10 – TEMPORARY SUSPENSIONS

The City Engineer shall have the authority to suspend the Work wholly or in part for such period or periods as he may deem necessary, due to unsuitable weather or such other conditions as are considered unfavorable for the suitable prosecution of the Work.

If it should become necessary to stop Work for an indefinite period, the Contractor shall store all materials in such manner that they will not obstruct or impede the traveling public unnecessarily nor become damaged in any way and he shall take every precaution to prevent damage or deterioration of the Work performed and shall provide suitable drainage about the Work and erect temporary structures where necessary.

The Contractor shall not suspend Work without written authority from the City Engineer and shall proceed with the Work promptly when notified by the City Engineer to resume operations.

111.11 – SUSPENSION OF WORK AND ANNULMENT OF CONTRACT

The issuance of a Stop Work Order shall not act to defer or suspend counting Working Days for the Project. The Work or any portion of the Work under Contract shall be suspended, immediately, on written order of the City Engineer or the City Council, a copy of such notice to be served upon Contractor's Surety, or the Contract may be annulled by the City Council, for any good cause or causes, among others of which special reference is made to the following:

A) Failure of the Contractor to start the Work within the time limit specified.

B) Substantial evidence that the progress being made by the Contractor is insufficient to complete the Work within the specified time.

C) Failure of the Contractor to provide sufficient and proper equipment for properly executing the Work.

D) Deliberate failure on the part of the Contractor to observe any requirements of these Specifications or to comply with any orders given by the City Engineer, as provided for in these Specifications.

E) Failure of the Contractor promptly to make good any defects in materials or Workmanship or any defects of any other nature, the correction of which has been directed in writing by the City Engineer.

F) Substantial evidence of collusion for the purpose of illegally procuring a Contract or perpetrating fraud on the City in the construction of Work under Contract.

When Work is suspended for any one of the causes itemized above, or for any other cause or causes, the Contractor shall discontinue the Work or such part thereof as the Council shall designate, whereupon the Surety may, at its option, assume the Contract or that portion thereof

which the Council has ordered the Contractor to discontinue and may perform the same or may, with the written consent of the City Engineer, approved by the Council, sublet the Work or portion of the Work so taken over; provided, however, that the Surety shall exercise its option, if at all, within two (2) weeks after the written notice to discontinue Work has been served upon the Contractor and upon the Surety or its authorized agent. The Surety, in such event, shall assume the Contractor's place in all respects and shall be paid by the City for all Work performed by it in accordance with the terms of the Contract and, if the Surety, under the provisions hereof, shall assume said entire Contract, all monies remaining due the Contractor at the time of the Contractor's default shall thereupon become due and payable to the Surety as the Work progresses, subject to all the terms of the Contract.

In the event the Surety does not, within the time herein before specified, exercise its right and option to assume the Contract, or that portion thereof which the Council has ordered the Contractor to discontinue, then the City shall have the power to complete by Contract or otherwise as it may determine, the Work herein described, or such part thereof as it may deem necessary and the Contractor hereby agrees that the City shall have the right to take possession of and use any of the materials, plant, tools, equipment, supplies and property of every kind provided by the Contractor for the purpose of the Contractor's Work and to procure other tools, equipment and materials for the completion of the same and to charge to the account of the Contractor the expense of said Contract for labor, materials, tools, equipment and expenses incident thereto. The expense so charged shall be deducted by the City out of such monies as may be due or may at any time thereafter become due the Contractor under and by virtue of the Contract or any part thereof. The City shall not be required to obtain the lowest Bid for the Work of completing the Contract but the expense to be deducted shall be the actual cost of such Work. In case such expense is less than the sum which would have been payable under the Contract, if the same had been completed by the Contractor, the balance shall operate as liquidated damages, as herein above set out. In case such expense shall exceed the amount which would have been payable under the Contract, if the same had been completed by the Contractor then the Contractor and the Contractor's Surety shall pay the amount of such excess to the City on notice from the Council of the excess so due. When any particular part of the Work is being carried on by the City by Contract or otherwise under the provisions of this section, the Contractor shall continue the remainder of the Work in conformity with the terms of the Contract and in such manner as in no wise to hinder or interfere with the performance or Workmen employed as above provided by the City.

111.12 – TERMINATION OF CONTRACT

The Contract will be considered fulfilled, save as provided in any Bond or Bonds or by law, when all Work has been completed, the Final Inspection made by the City Engineer and Final Acceptance and final payment made by the City.

111.13 - PROJECT CLOSE-OUT (FOR BUILDING/FACILITY PROJECTS ONLY):

Prior to final formal acceptance and release of retainage by the awarding public agency, the Contractor shall deliver to the Owner via the Architect/Engineer three copies of a neatly bound Operations and

Maintenance manual organized in a manner corresponding to the Division within the Specifications and containing the following information:

a. A Directory containing the firm name of each subcontractor and material supplier on the project, subcontractor's and material suppliers address, telephone number, and representative to contact for repair and/or maintenance.

b. A copy of the Architect/Engineer's Color and Finish Schedule with any subsequent revisions duly noted. Information must include project manufacturer's name, style name and product number, for all paints, flooring and other finish products used on the project.

c. Guarantees, warranties and/or operating instructions for materials, equipment, or installations as required by other Divisions of the Specifications.

SECTION 112 – MEASUREMENT AND PAYMENT

112.01 – MEASUREMENT OF QUANTITIES

The determination of quantities of Work acceptably completed under the terms of the Contract,

as directed by the City Engineer in writing, will be made by the City Engineer based on measurements taken by the designated representative. These measurements will be taken according to the United States Standard Measurements. When materials are measured in the vehicle, the measurement will be taken at the point of delivery. When required by the City Engineer, the capacity of all vehicles shall be plainly marked on each vehicle and the capacity or markings shall not be changed without the permission of the City Engineer.

112.02 – SCHEDULE OF VALUES (FOR LUMP SUM CONTRACTS ONLY)

Contractor will submit schedule of Unit Prices of various parts of the Work within ten (10) days after the Contract is awarded. Schedule shall be a complete breakdown of labor and materials required for the job showing quantities and Unit Prices, the whole aggregating the total sum of the Contract. The City Engineer will furnish the Contractor a list of the certain items on which Unit Prices and quantities are desired which will be included in this schedule. This schedule, when approved by the City Engineer, shall be used as a basis for monthly payments to the Contractor. In applying for payments, the Contractor's statement shall be broken down in conformity with this schedule.

112.03 – SCOPE OF PAYMENT

Partial payments shall be made based on the Work completed. Up to ten percent (10%) of the partial payments shall be held as retainage. At the time the Contractor has completed in excess of fifty percent (50%) of the total Contract amount, the retainage shall be reduced to five percent (5%) of the amount earned to date if the public Contracting entity determines that satisfactory progress is being made.

Applications for payment shall be made upon the forms provided by the City or photocopies thereof and such forms must be properly completed, signed and notarized. Applications for payments shall have attached thereto the Contractor's invoice and other supporting detail. Contractor must supply invoices for any stored materials for which payment is claimed.

The Contractor shall receive and accept the compensation as herein provided in full payment for furnishing all labor, materials, tools, equipment and incidentals, for performing all Work contemplated and embraced under the Contract; for all loss or damage arising out of the nature of the Work or from the action of the elements, for any unforeseen defects or obstructions which may arise or be encountered during the prosecution of the Work and before its Final Acceptance by the City Engineer, for all risks of every description connected with the prosecution of the Work; for all expenses incurred by or in consequence of suspension or discontinuance of such prosecution of the Work as herein specified; for any infringement of patents, trademarks or copyrights and for completing the Work in an acceptable manner according to the Plans and Specifications.

The payment of any current or partial estimate prior to Final Acceptance of the Work by the City shall in no way constitute an acknowledgment of the Acceptance of the Work nor in any way prejudice or affect the obligation of the Contractor to repair, correct, renew, or replace at the Contractor's expense any defects of imperfections in the construction or in the strength or quality of the materials used in or about the construction of the Work under the Contract or its appurtenances nor any damage due to or attributed to such defects, which defects, imperfections or damage shall have been discovered on or before the Final Inspection and Acceptance of the Work. The City Engineer shall be the sole judge of such defects, imperfections or damage and the Contractor shall be liable to the City for failure to correct the same as provided herein.

112.03.01 – VERIFICATION AND INSPECTION OF PAYROLL RECORDS

If required by contract or directed by the Engineer, the Contractor shall keep weekly records, permit inspection of records, and certify and provide copies of payroll records and Contracts and subcontracts. Example forms are available from the Public Works Department for the convenience of the Contractor.

112.03.02 – REPORTS

If required by contract or directed by the Engineer, the Contractor shall submit certified weekly payroll information to the City. Receipt of the certified payroll information shall be a pre-condition for the City to process the final pay application or claim voucher. The City may submit a copy of such certified payroll information to the Oklahoma State Department of Labor and the Wage and Hour Division of the Employment Standards Administration of the United States

Department of Labor.

112.04 – PAYMENT FOR EXTRA WORK

The Extra Work done by the Contractor, as authorized and approved by the City Engineer and the City Council, will be paid for in the manner described. The compensation shall be accepted by the Contractor as payment in full for all labor, materials, tools, equipment and incidentals and all employees' services, all insurance and all other overhead expense incurred in the prosecution of the Extra Work.

Payment for Extra Work will be made by one or more of the following methods:

A) Unit Prices agreed on in writing by the City Engineer and the Contractor and approved by the Council before said Work is commenced, subject to all other conditions of the Contract.

B) A Lump Sum price agreed on in writing by the City Engineer and the Contractor and approved by the Council before said Work is commenced, subject to all other conditions of the Contract.

C) The actual cost including labor, materials, tools, equipment and field supervision of such Extra Work plus fifteen percent (15%). Fifteen percent (15%) is hereby understood and agreed to include all overhead expense and profits, when agreed upon in writing by the City Engineer and the Contractor and approved by the Council before said Work is commenced; subject to all other conditions of the Contract.

D) Any substantial change(s) in quantities required to complete the Work will require a Contract Amendment based on the Unit Prices bid.

E) Any addition, deletion, revision or adjustment to the Contract price shall be made with a Change Order or Amendment as defined in Section 108.

The Contractor shall, on or before the 10th day of the month succeeding that in which any Extra Work shall have been performed, file with the City Engineer the Contractor's claim and an account giving the itemized cost of such Work and shall give the City Engineer access to all accounts, bills and vouchers relating thereto.

112.05 – PARTIAL ESTIMATES

It is understood that the estimates from month to month will be approximate only and all partial monthly

estimates and payments will be subject to correction in the estimate rendered following discovery of an error in any previous estimate and such estimate shall not, in any respect, be taken as an admission of the City of the amount of Work done or of its quality or sufficiency nor as an Acceptance of the Work or the release of the Contractor of any of the Contractor's responsibility under the Contract. No partial estimates will be made on assessment paving Projects except where the City is paving a portion of these Projects and the money is available. Partial payments shall be made based on the Work completed. Unless otherwise provided in the Special Provisions, where Unit Prices are Bid, partial payments and final claims will be based on actual quantities used.

112.06 – RETAINAGE

Partial estimates on Work done and/or materials furnished in accordance with the provisions of Subsection 112.05 shall provide that ten percent (10%) of all such partial estimate made shall be withheld as retainage. Provided, however, that at any time the Contractor has completed in excess of fifty percent (50%) of the total Contract amount the retainage shall be reduced to five percent (5%) of the amount earned to date. Provided further, however, that the City has determined that satisfactory progress is being made and upon approval by the Surety.

112.07 – SUBSTITUTE SECURITIES FOR RETAINAGE

The City Manager, acting on behalf of the Council of the City of Piedmont, may approve Agreements and Amendments for Acceptance of Certificates of Deposit or Securities to be held in lieu of retainage when such forms are in substantial compliance with requirements of the City. The bank from which the Securities of Deposit are purchased shall hold such Securities or Certificates of Deposit in safekeeping for the City. The original safekeeping receipt shall be deposited with the City Treasurer with a photostatic copy furnished to the City Clerk to be attached to the Agreement.

Following are procedures for Securities to be held in lieu of retainage:

A) Contractor should purchase from banking institution located in Piedmont a Certificate of Deposit having par value equal to or exceeding the amount of retainage to be withdrawn. The Owner named must be The Council of the City of Piedmont.

B) The Certificate of Deposit shall be deposited in a banking institution in Piedmont with instructions to transfer the Certificate to the custody of the Owner upon the Contractor's subsequent direction.

C) Execute five (5) copies of the Agreement and deliver to the City Engineer.

D) Simultaneously, a request for payment should be initiated (through the Project Engineer) for the retainage in an amount not to exceed the amount of the Securities.

E) After the Agreement and the Certificate of Deposit have been examined and are found to be in proper order, the Agreement will be forwarded to the City Manager's Office for approval and execution.

F) After approval and execution of the Agreement, the Contractor will be notified of such action and instructed to direct the bank to transfer custody of the Certificate to the Owner upon presentation to the bank of a fully executed copy of the Agreement.

G) After the above has been completed, the claim for the retainage will be processed through the City for approval.

NOTE: The claim should not be notarized prior to the Manager's approval of the Agreement or the transfer of custody of the Certificate.

Upon completion of the Work, the Contractor shall submit with the Contractor's final claim a request for the Owner to execute the Certificate of Deposit and the City will instruct the bank to transfer custody
back to the Contractor.

112.08 – PAYMENTS WITHHELD

The City Engineer may withhold, or on account of subsequently discovered evidence, nullify the whole or a part of any Certificate to such extent as may be necessary to protect the City from loss on account of:

A) Defective Work not remedied.

B) Claims filed or reasonable evidence indicating probable filing of claims.

C) Failure of the Contractor to make payments properly to subcontractors or for materials or labor.

D) A reasonable doubt that the Contract can be completed for the balance then unpaid.

E) Damage to another Contractor.

F) When the above grounds are removed, payment shall be made for amounts withheld because of them.

112.09 – STATE TAX

Title 68 Oklahoma Statutes (1991), Section 1356 (I), exempts sales to a municipality and its Contractors from all sales tax on the sale of "tangible personal property or services." All Bids for City Projects shall be assumed to have been made based on such statutory exemption as effective on the Bid date. All Municipal Trust projects are exempt from this provision and must pay sales tax.

The Contractor will be responsible for and bear the expense of all Sales Tax and other State tax pertaining to this Project, the cost of such tax being included in the Contractor's original Bid.

112.10 – ACCEPTANCE AND FINAL PAYMENT

When the Contract Work is completed satisfactorily and all parts of the Work have been approved by the City Engineer. The Engineer shall prepare the final payment for the Work. The final payment shall be based on the final measurements of the Work completed. All prior estimates, upon which payments have been made, are subject to corrections or revisions in the final payment. The Work is accepted by the City and the Maintenance Bond is filed. The payment for the accepted Work, less any sums that have been deducted or retained under the provisions of the Contract, will be paid to the Contractor as soon as practical after the Final Acceptance. When requested by the City Engineer, the Contractor shall furnished to the City satisfactory evidence that all sums of money due for any labor, materials, apparatus, fixtures or machinery furnished for the purpose of such improvement or liens have been paid or that the

person or persons to whom the same may respectively be due have consented to such final payment.

The acceptance by the Contractor of the last payment shall release the City from all claims or liability under the Contract for anything done, furnished, or relating to the Work under the Contract, or for any act or neglect of said City relating or connected with the Contract.

112.11 – FINAL MEASUREMENTS AND FINAL ESTIMATES

Final measurements will be taken and final estimates compiled as soon as Work has progressed to a point where the final measurements may be taken accurately.

112.12 – WAGE RATES

See Special Provisions for approved minimum wage rates.

INDEX SECTION 100

A.A.S.H.T.O. 2, 30
A.N.S.I. 2
A.S.T.M. 2, 30
Acceptance 2, 6, 19, 20, 30, 32, 39, 46, 47, 48, 49, 50
Addenda 3, 13, 14, 21
Addendum 13, 14, 22
Advertisement 43
Alternate Bid 16, 17, 19
Amendment 22, 48
Anticollusion 17
Architect 5, 8, 13, 14, 22
Architect/Engineer 8, 13, 14
award 19
Award 11, 13, 16, 17, 19, 21, 22
Base Bid 2, 15, 16, 19
bid 16
Bid 2, 3, 4, 5, 7, 8, 9, 12, 13, 14, 15, 16, 17, 19, 20, 21, 22, 26, 30, 36, 38, 43, 44, 46, 48, 50
Bid Bond 3, 16, 17, 21
Bid Date 3, 8
Bid Form 3, 14, 15, 16, 17, 26
Bid Package 3, 14, 16
Bid Security 17

Bidder 2, 3, 7, 8, 11, 13, 14, 15, 16, 17, 19, 20, 21, 22, 26
Bidding Documents 1, 2, 3, 4, 9, 11, 13, 14, 15, 16, 17, 19, 20, 21, 22, 23
Bonds 2, 3, 5, 9, 11, 16, 19, 20, 21, 46
Change Order 5, 22, 23, 31
City1, 2, 3, 4, 5, 6, 7, 8, 9, 10, 12, 13, 14, 15, 16, 17, 19, 20, 21, 22, 23, 26, 27, 28, 29, 30, 31, 32, 33, 34, 35, 36, 37, 38, 39, 42, 43, 44, 45, 46, 47, 48, 49, 50
City Auditor 3, 4
City Clerk 3, 4, 13, 14, 16, 17, 26, 49
City Engineer2, 4, 6, 8, 9, 13, 14, 19, 20, 21, 22, 23, 27, 28, 29, 30, 31, 32, 33, 34, 36, 37, 38, 39, 42, 43, 44, 45, 46, 47, 48, 49, 50
City Manager 4, 49
City Treasurer 4, 49
completed 6, 16
Completed 4, 6, 8, 14, 15, 16, 17, 31, 32, 37, 46, 47, 48, 49
Consultant Architect/Engineer 8, 13, 14
contract 2, 5, 19, 22
Contract1, 2, 4, 5, 6, 7, 8, 9, 11, 13, 16, 17, 19, 20, 21, 22, 23, 26, 27, 30, 31, 32, 33, 34, 37, 38, 39, 42, 43, 44, 45, 46, 47, 48, 49, 50
Contract Documents 2, 5, 8, 9, 11, 16, 19, 20, 21, 22, 23, 26, 27, 31, 34
Contractor3, 5, 6, 7, 8, 9, 14, 19, 20, 21, 22, 23, 27, 28, 29, 30, 31, 32, 33, 34, 35, 36, 37, 38, 39, 42, 43, 44, 45, 46, 47, 48, 49, 50
Council 2, 5, 14, 19, 42, 44, 45, 46, 48, 49
Defect Bond 20, 21
Detailed Bid Form 14, 15, 26
Developer 5
Engineer2, 4, 5, 6, 8, 9, 13, 14, 19, 20, 21, 22, 23, 27, 28, 29, 30, 31, 32, 34, 36, 37, 38, 39, 42, 43, 44, 45, 46, 47, 48, 49, 50
equipment 7, 8, 9, 13, 14, 20, 21, 23, 27, 31, 34, 43, 44, 45, 46, 47, 48
Equipment 44
Execute 21
Execution 21
Extra Work 26, 48
Field Change 5, 6, 22, 23

Final Acceptance
..... 39
final inspection 4, 32, 46, 47
Final Inspection..... 32
furnish 16, 19
Furnish 8, 14, 16, 21, 28, 35, 42, 44, 47
labor 8, 9, 20, 21, 43, 46, 47, 48, 49, 50
Labor
..... 48
liquidated damages 16, 21, 30, 42, 44, 45, 46
Lump Sum 22, 48
maintenance bond
..... 6
Maintenance Bond 6, 20, 21, 50
materials 8, 9, 13, 14, 20, 21, 22, 23, 27, 28, 29, 30, 31, 32, 34, 37, 43, 44, 45, 46, 47, 48, 49, 50
Materials 2, 28, 31
Mayor
..... 7
Municipal Counselor
..... 7
Noncollusion
..... 3
Noncollusion Affidavit..... 3
Performance Bond
..... 20
Permit 38, 44
person
..... 5
Person 2, 3, 5, 14, 37, 42, 43, 50
plans
..... 14
Plans 2, 3, 4, 5, 9, 14, 21, 23, 26, 38, 44, 47
Prequalification 3, 8, 12
Prequalification Review Board
..... 8
private property
..... 5
project
..... 6, 16
Project 1, 3, 6, 7, 8, 9, 12, 13, 14, 16, 19, 20, 21, 22, 26, 29, 30, 32, 34, 35, 36, 38,

45, 49, 50
provide
..... 16
Provide 13, 16, 19, 20, 21, 22, 27, 28, 31, 33, 35, 38, 45, 47, 48
punchlist inspection
..... 6
Special Provisions 3, 4, 8, 9, 12, 13, 14, 16, 17, 20, 21, 26, 31, 38, 44, 48, 50
specifications
..... 6
Specifications 1, 2, 3, 4, 5, 6, 9, 12, 21, 23, 26, 29, 30, 39, 43, 44, 45, 47
Standard Specifications 1, 2, 3, 9, 12, 26, 29
Statutory Bond
..... 20
Substitutions 13, 22, 23
Sureties
..... 19
surety
..... 9
Surety 5, 7, 8, 9, 19, 21, 37, 42, 45, 46, 49
unit price
..... 2
Unit Price 2, 3, 14, 15, 22, 30, 47, 48
work 5, 6, 7, 8, 21, 23, 31
Work1, 2, 3, 4, 5, 6, 7, 8, 9, 10, 13, 14, 20, 21, 22, 23, 26, 27, 28, 30, 31, 32, 33, 34, 35, 36, 37, 38, 39, 42, 43, 44, 45, 46, 47, 48, 49, 50
work order
..... 23
Work Order 21, 23, 36, 45
Working Day 9, 44, 45

EXHIBIT B – ADDENDUM to OKLAHOMA CITY STANDARD SPECIFIATIONS

Section 100: Strike entire section; adopt Exhibit A as Section 100.

Section 200

Section 215.02 – strike this section.

Section 222.04 E, Change paragraphs 1 and 2 to read:

General. The type and proportion of stabilization additive indicated on the plans is approximate. The type and the final rate of application of stabilization additive ultimately used shall be based on tests of the subgrade soil. The tests of the subgrade soils shall be performed by a laboratory to be selected by the Contractor and approved by the Public Works Director. The stabilization additive shall be applied at the rate prescribed by the Engineer based on tests of the subgrade soil.

Deleted: the Department. However, with the approval of the Engineer the Contractor has the option of having the tests performed by a laboratory approved by the Department in accordance with the Materials Division policy for soil stabilization at no additional cost to the Department

The Contractor may propose the use of a cementitious additive that was not specified on the Plans as a substitute, by submitting a proposal to the Engineer for review and approval. The proposal must include test results performed by a laboratory approved by the Public Works Director in accordance with the Materials Division policy for soil stabilization, the recommended application rates from those test results for the planned and proposed additives, and the cost comparison of the planned and proposed additives. Approval of the Engineer must be obtained prior to any substitution for the planned additive.

Deleted: Department

Deleted:

Section 300 – Strike this section

Section 400

Section 404.04A, change to read

A) Handling, Measuring and Batching materials shall be in accordance with the current version of the Oklahoma Department of Transportation Standard Specifications.

Deleted: Section 304.04

Section 404.04B, change to read

B) Mixing - The mixing of concrete shall be in accordance with the current version of the Oklahoma Department of Transportation Standard Specifications.

Deleted: Section 304.03

Section 450.01.01, change to read

As a minimum, all Contractors and Bidders shall meet the prequalification requirements of the City of Oklahoma City's Prequalification Board, and be prequalified to perform work in the "Storm Sewer Construction" Category. Prequalification for additional categories of work, when required may be specified in the Special Provisions.

Section 500

Section 500.09 -- strike this section

Section 500.10 C – strike this section

Section 500.10 D – strike this section

Section 505.02.02 A, change to read

General - Prior to delivery, the Contractor shall submit laboratory tests for materials to be used for embedment, and backfill. Materials shall be approved by the Engineer prior to placement.

Deleted: Embedment material shal' meet the requirements of Section 21

Section 515.01, change third paragraph to read

Construction of firelines and associated appurtenances shall comply with the applicable requirements of the International Building Code, International Plumbing Code, and International Fire Code, as adopted by the City.

Deleted: Code for Fire Prevention and Protection and

Deleted: amended

Section 515.02.04, change to read

Fire standpipes shall be installed pursuant to the requirements of the applicable sections of the International Building Code, International Plumbing Code, and International Fire Code, as adopted by the City

Deleted: Oklahoma City Code for Fire Prevention and Protection

Section 516.02.11, change to read

Fire hydrants shall be painted with two (2) coats of high gloss enamel paint. Each coat of paint shall have a minimum dry thickness of two (2) mils. Paint color and manufacturer shall be approved by the Public Works Director.

Deleted: International Orange

Deleted: manufactured by Pittsburgh Paint or approved equal

Section 524.05 – strike this section

Section 600

Section 600.01.01, change to read

As a minimum, all Contractors and Bidders shall meet the prequalification requirements of the City of Oklahoma City's Prequalification Board, and be prequalified to perform work in the "Sanitary Sewer ALL Construction" Category. Prequalification for additional categories of work, when required may be specified in the Special Provisions.

Section 700 – strike this section

Section 900

Section 932, change first paragraph to read

This Specification covers all materials, classification, mix designs, proportioning, and testing of Portland cement concrete. All concrete shall be air entrained unless otherwise shown on the Plans. The equipment and tools necessary for the mixing of concrete shall meet the requirements of the Oklahoma Department of Transportation Standard Specifications.

Deleted: Section 403, with Sections 304 and 404 as specified for each use

Section 945.05, change second paragraph to read

Section 27, ASTM Designation C-76-82 Specifications shall be expanded as follows: Specifications in the City of Piedmont Street Standards and ODOT Specifications with respect to number of cylinders to be tested, ordering of tests by the Engineer, manner of collecting test cylinders and requirements regarding seven (7) day and twenty-eight (28) day tests shall apply to this section.

Deleted: under Section 304

Section 970 – strike this section

7/27/10

RESOLUTION NO 9-27-2010 A

A RESOLUTION OF THE CITY COUNCIL OF THE CITY OF PIEDMONT ADOPTING STANDARDS AND CRITERIA FOR STORMWATER MANAGEMENT FOR THE CITY OF PIEDMONT AS REFLECTED IN THE DOCUMENT ATTACHED HERETO AND TITLED STORMWATER CRITERIA CITY OF PIEDMONT OKLAHOMA 2010.

WHEREAS, the City of Piedmont has employed Meshek and Associates to prepare minimum criteria and standards for stormwater management in the City of Piedmont and the standards and criteria have been prepared, reviewed and approved by city staff and the Planning and Zoning Commission of the City of Piedmont;

NOW THEREFORE BE IT RESOLVED BY THE CITY COUNCIL OF THE CITY OF PIEDMONT AS FOLLOWS:

The document entitled **City of Piedmont, Oklahoma Stormwater Criteria 2010** is hereby adopted as the minimum standards and criteria for storm water management in the City of Piedmont, Oklahoma. A true and correct copy is attached hereto and incorporated herein by reference.

ADOPTED AND APPROVED this 25th day of October, 2010, by the Piedmont City Council and Mayor.

MAYOR

ATTEST:

CITY CLERK

Approved as to form and legality on 9/27, 2010.

City Attorney

CITY OF PIEDMONT, OKLAHOMA

STORMWATER CRITERIA MANUAL

AUGUST 2010

PREPARED BY

DR. ELLEN STEVENS, PHD, PE

AND

MESHEK & ASSOCIATES, PLC

Table of Contents

I. Policies 1

A. Drainage policies 1

1. Stormwater drainage system design 1
2. Development impact on flooding 1
3. Development impact on peak flow rates 1
4. Offsite drainage requirements 1
5. Stormwater management control 1
6. Completion of stormwater facilities 2
7. Use of Design Criteria 2
8. Downstream improvements and easements 2
9. Concentration of flows 2
10. Requirement for hydraulic analyses 2
11. Compensatory storage 2
12. Use of natural channels and streams 2
13. Open section roads and borrow ditches 3
14. Storm sewer requirements 3

B. Erosion and sediment control policies 3

1. Requirements for construction 3
2. Minimize sediment-related pollution 3
3. Sedimentation facilities 4
4. Best Management Practices 4

II. General Requirements 4

A. Lot Drainage 4

1. Conveyance of surface drainage 4
2. Grading adjacent to foundations 4
3. Grading adjacent to foundations under special circumstances 5
4. Equipment or storage under crawlspaces 5
5. Buildings located below street grade 5

6. Building elevations along open paving sections 6
B. Operation and Maintenance of Stormwater Detention Facilities 6
1. Access to stormwater facilities 6
2. Maintenance during construction 6
3. Maintenance by property owners 6
4. Maintenance of completed stormwater detention facilities 7
C. Easements: 7
1. Drainage and Detention Easements 7
D. Revisions to Floodplain Maps 10
1. CLOMR and LOMR requirements 10
2. LOMR-F requirements 10
3. CLOMR requirements 10
4. LOMR requirements 10
5. Mapping requirements 10
E. Acceptance of Existing Stormwater Drainage Facilities 11
1. Guidelines for acceptance of stormwater drainage facilities 11
2. Guidelines for acceptance of channels 11
3. Guidelines for acceptance of storm sewer systems 11
III. Construction and approval of drainage facilities. 11
A. Scheduling of construction of stormwater facilities 11
B. Maintenance of stormwater facilities during construction 12
C. As-built drawings. 12
D. Maintenance bond. 12
IV. CONTENTS OF DRAINAGE PLANS AND STUDIES 12
A. General Requirements 12
1. Requirement for Professional Engineer licensure. 12
2. Certification statement 13
3. Owner's Statement 13
4. Property owned by a corporation 13

B. SUBMITTAL REQUIREMENTS 14
1. Summary Statement 14
2. Drainage Report 14
3. Report Contents: 15
4. DRAWING CONTENTS 18
V. Technical Requirements 20
A. Technical Requirements – Rainfall 20
B. Technical Requirements - Runoff 20
C. Technical Requirements - Hydraulics of Open channels 23
D. Technical Requirements - Hydraulics of Bridges 24
E. Technical Requirements - Hydraulics of Culverts 24
F. Technical Requirements - Street and Overland Stormwater Drainage 25
G. Technical Requirements - Storage Requirements 28
H. Design Standards – Stormwater Detention Facilities 31
1. General Design Criteria 31
2. On-Site Stormwater Detention 32
3. Design Standards for Open Space Detention 32
4. Design Standards for Parking Lot Detention 33
VI. Green Development 35

I. Policies

A. *Drainage policies.*

1. Stormwater drainage system design

The stormwater drainage system shall be designed to pass the peak stormwater run-off received from upstream and from the subject property for storms with durations up to twenty-four (24) hours and return periods of up to one hundred (100) years.

2. Development impact on flooding

All development, redevelopment, and earth changes shall be constructed such that it will not increase the frequency of flooding or the depth of inundation of structures during the 50% (2-year), 20% (5-year), 10% (10-year), 2% (50-year), and 1% (100-year) flood events. A commercial or multi-family development site under 5 acres shall be constructed such that it will not increase the frequency of flooding or the depth of inundation of structures during the 20% (5-year), 10% (10-year), 2% (50-year), and 1% (100-year) flood events.

3. Development impact on peak flow rates

Peak flows shall not be increased at any location, upstream or downstream of any development for the 50% (2-year), 20% (5-year), 10% (10-year), 2% (50-year), and 1% (100-year) flood events unless approved by the City Engineer and provisions of Sec 1.A.(4) are met. In order to compare the effects of the project, existing conditions shall be computed and compared to the "with proposed project" conditions at all points of discharge from the project and at points downstream as specified by the City Engineer to ensure that there is no increase in the discharges.

4. Offsite drainage requirements

The City may require improvements, provision of drainage easements, provision of improvements, agreements, and/or easements beyond the boundaries of the development. The required construction of offsite drainage improvements are:

a. to facilitate flow of storm water from or through the property,
b. to avoid damage from changed runoff conditions,
c. to provide continuous improvement of the overall storm drainage system, and
d. to accommodate other drainage conditions or requirements.

Where storm water runoff flows require the logical extension of any street and its associated drainage in order to prevent flooding, ponding, or uncontrolled runoff the extension shall be provided by the developer.

5. Stormwater management control

No action shall be taken in any land improvement by any developer, contractor, or lot owner that will alter or otherwise change existing designed and installed storm water management control, nor shall any action be taken on existing property that shall adversely affect storm water runoff in any manner contrary to the provisions of this Chapter. Whether temporary in nature to service only the construction phase of development, or whether a combination of temporary and permanent serving a dual purpose, the first techniques to be employed in the development of a site shall be the management of storm water and drainage in a manner consistent with the requirements of this Chapter.

6. Completion of stormwater facilities

Developers shall complete construction of stormwater facilities to control runoff and erosion prior to issuance of any building permits.

7. Use of Design Criteria

Regulation of peak flows to allowable levels, as determined by subparagraphs (2) and (3) herein, shall be achieved by on-site or off-site storage and/or other water management facilities as provided in these Drainage Criteria.

8. Downstream improvements and easements

Subject to requirements in the City Drainage Standards for a drainage plan or earth change permit, downstream conveyance may be improved or easements obtained for inundated areas to compensate for increased flow depths if such improvements comply with the policies of this chapter.

9. Concentration of flows

All development, redevelopment, and earth changes shall be constructed so that it will not cause harm to other properties as a result of concentrating flows.

10. Requirement for hydraulic analyses

If a tract of land under development has a drainage basin of 10 acres or larger within its boundary, then a hydraulic (backwater) analysis of the existing and proposed drainage system shall be provided to show any impact the proposed development has on the floodplain area and elevation.

11. Compensatory storage

Compensation shall be provided for filling or development which diminishes the flood storage capacity of the flood plain area from drainage basins of 10 acres or larger, by providing compensatory storage or other method as determined by the City Engineer.

12. Use of natural channels and streams

The design of any development shall provide for the maximum use of open channels and natural streams for drainage areas of 40 acres or more, and detention storage to control runoff rates. Natural drainage channels and techniques shall be given priority consideration in preparation of stormwater drainage system designs and shall be designed or improved as an integral part of the landscape of the area in accordance with the following guidelines:

a) Drainage channel improvements shall be developed and designed to preserve and protect trees and other worthy botanical and geological features to the maximum extent practicable. Vegetation shall be preserved when feasible. Riparian habitat shall be maintained when feasible, during improvements

b) Wherever channel improvements are required to accommodate storm runoff in a specified manner, the designs shall provide maximum practical utilization of turf, sodding, and natural ground surface protection techniques in order to protect the environment by reducing erosion potential.

c) Water quality control measures shall be incorporated into stormwater management designs, subject to approval of the City Engineer. Additionally, impacts on receiving water quality shall be assessed for all flood management projects.

d) The City Engineer may require open channels for other drainageways for just cause.

13. Open section roads and borrow ditches

Open section roads and bar ditches may be used in Zoning Districts A-1, RE, RE-1, I-2, I-3 or in developments where the road frontage for every lot is at least 145 feet. The conditions identified in Section V.C.7.

14. Storm sewer requirements

Storm sewers shall be used for all developments wherein the conditions given in this manual for use of open section roads are not met. Storm sewers may be used in any development at the developer's discretion and may be required by the City Engineer where there are no viable alternatives to fit the site or geographic conditions. Storm sewers may be used to alleviate existing drainage problems, subject to the approval of the City Engineer. Open ditches may be used at the discretion of the City Engineer in specific locations where green solutions are more desirable within the maintenance requirements of the City.

B. Erosion and sediment control policies.

1. Requirements for construction

All development, redevelopment, and earth changes shall be designed, constructed and completed in a manner which minimizes the exposure of bare earth to precipitation. Contractor shall file NOI, develop SWPPP and otherwise comply with applicable local, state, or federal regulations. Contractor shall provide a copy of the NOI and SWPPP to the city.

2. Minimize sediment-related pollution

All development, redevelopment, and earth changes shall be constructed in a manner that will minimize soil dispersal, sedimentation, erosion, or other similar forms of pollution:

a) From any surface of the site into drainage channel provided or created within the development;

b) From the site into drainage channels adjacent to and remote from the site.

3. Sedimentation facilities

All development, redevelopment, and earth changes shall be constructed only if appropriate sedimentation facilities are installed and maintained throughout the construction period.

4. Best Management Practices

All development, redevelopment, and earth changes shall be accompanied by Best Management Practices for controlling sediment and erosion so as to minimize the amount of sediment leaving the site.

II. General Requirements

A. *Lot Drainage*

1. Conveyance of surface drainage

Surface drainage shall be diverted to a designated stormwater conveyance or other approved point of collection that does not create a hazard. No more than 2 lots or ½ acre shall be allowed to drain onto an adjacent lot unless it drains into a designated stormwater drainage system component.

2. Grading adjacent to foundations

Lots shall be graded to drain surface water away from foundation walls, as follows:

a) The grade shall fall a minimum of 6 inches within the first 10 feet.

b) The top of any exterior foundation shall extend above the elevation of the street gutter at point of discharge or the inlet of an approved drainage device a minimum of 12 inches plus 2 percent times the distance from the gutter to the building. The drawing below illustrates these requirements.

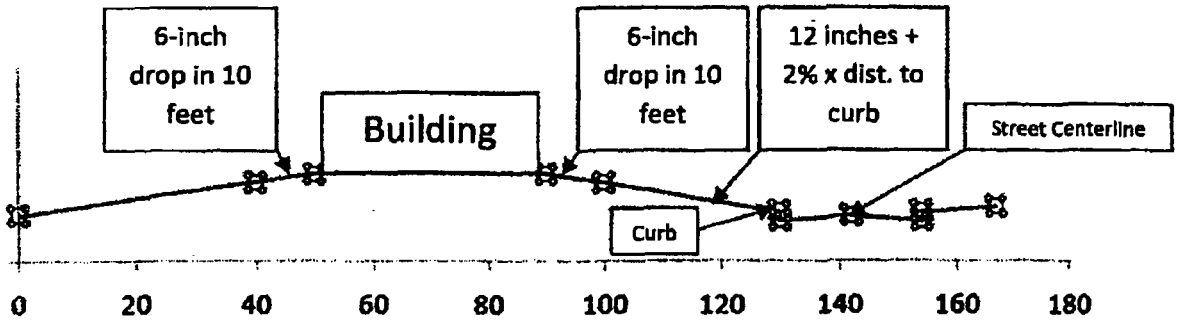

3. Grading adjacent to foundations under special circumstances

Where lot lines, walls, slopes or other physical barriers prohibit 6 inches of fall within 10 feet, the following applies:

a) Drains or swales shall be constructed to ensure drainage away from the structure.

b) Impervious surfaces within 10 feet of the building foundation shall be sloped a minimum of 2 percent away from the building.

c) Between buildings, the sketch to the right shows the minimum requirements for drainage.

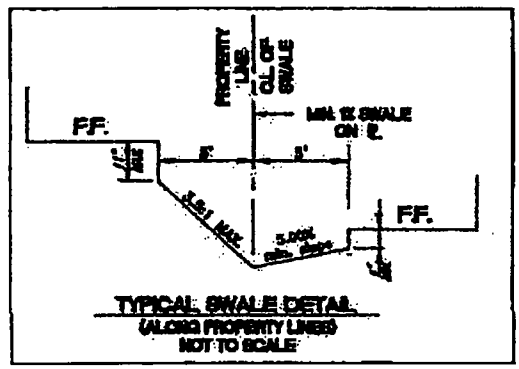

4. Equipment or storage under crawlspaces

Crawlspaces shall not be used for mechanical and electrical equipment or storage purposes of any kind lower than the following:

a) An elevation of one foot above the lowest curb (in a curb and gutter section) or street elevation (in an open paving section) adjacent to the lot; or

b) An elevation one foot above the lowest ground elevation adjacent to the lot.

5. Buildings located below street grade

In a curb and gutter roadway section where buildings are located below the grade of the street, the following applies:

a) There shall be a horizontal distance between the toe of the slope and the building equal to the vertical component of the slope, shown below. This area shall be used to divert water around the building.

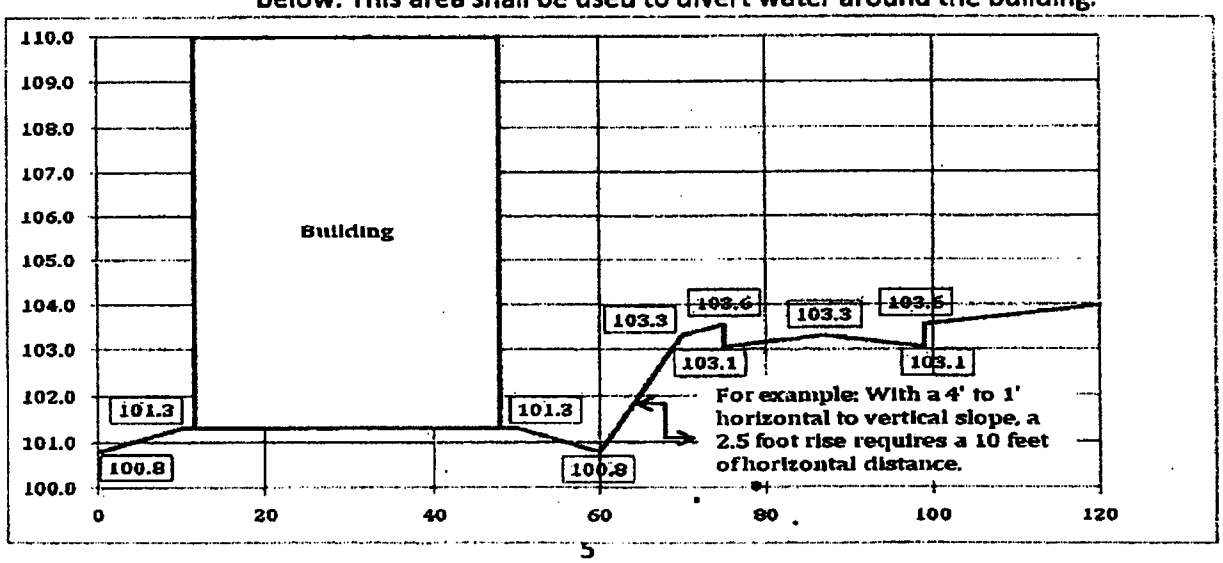

b) If a wall is used to separate the curb elevation from the elevation in front of the building, the horizontal distance between the wall and the building shall be equal to or greater than the difference in elevation between the curb elevation and the building finished floor.

c) The drive shall be shaped so that the high point between the gutter and downhill portion of the driveway slope is at or above the highest adjacent curb elevation.

6. Building elevations along open paving sections

The elevation of the front of buildings adjacent to the street will not be allowed below roadway elevations in an open section.

B. Operation and Maintenance of Stormwater Detention Facilities

Operation and Maintenance of Stormwater Detention Facilities shall be provided as follows:

1. Access to stormwater facilities

The City of Piedmont requires that maintenance access be provided to all storm drainage facilities for operational and maintenance purposes through acceptance of the project by the City. After acceptance, private maintenance of the facilities shall be continued, with permanent access protected by a dedicated easement. The easement shall be shown on final plats or final development plans and shall clearly state that the purpose is for private stormwater management facilities maintenance.

2. Maintenance during construction

Drainage facilities provided by the developer shall be fully and properly maintained from construction through final acceptance of the development improvements by the City of Piedmont. Following acceptance, private maintenance of the facilities shall be governed by II.B.4.

3. Maintenance by property owners

It shall be the responsibility of all property owners to maintain drainage facilities as follows:

a) Mow and provide maintenance of drainage channels and their slopes for that portion of the channel lying within their property limits

b) Keep clear all drainage channels within the boundaries of their properties in accordance with the requirements of this MANUAL

c) Prevent any and all drainage interferences, obstructions, blockages, or other adverse effects upon drainage into, through, or out of the property

d) Control the erosion of the drainage channels and the deposition of materials into the drainage channels from the property.

e) Permanent access as described in B.1 shall be provided whether the stormwater facilities are public or private.

4. Maintenance of completed stormwater detention facilities

Stormwater detention facilities shall be maintained as follows:

a) Remedial activities to be provided include erosion control, sediment removal and minor reconstruction of side slopes, areas subject to turbulence, and detention pond outlet works.

b) Mowing shall be provided at least once a month during the 7-month growing season ***from March 15 to October 15.***

C. Easements:

1. Drainage and Detention Easements

a) Drainage easements shall be sized to carry, at minimum, a one percent (1%) storm. Such easements shall be continuous and contiguous from one property to the next.

b) A drainage easement shall be required:

(1) Where storm water runoff is designed to exit the public right-of-way and enter private property. Such easement shall be located at and extend from the point of entry onto private property to the point where the runoff enters another property, intersects another drainage easement, or enters a drainage facility or another public right-of-way.

(2) Where storm water runoff from a drainage basin of 1/2 acre or larger enters a property from an adjacent property. Such easement shall be located at and extend from the point of entry onto the site to the point where the runoff enters another property, intersects another drainage easement, or enters a drainage facility.

(3) Around the boundaries of drainage/retention facilities. Such easement shall be adequate in size to permit access to such

facility from a public right-of-way and around the perimeter of such facility.

c) Easements shall be required for all stormwater management facilities not in public rights of way; including:

(1) Storm sewers

(2) Channels

(3) Storage areas

(4) Other hydraulic structures

(5) All portions of the public stormwater drainage system with a drainage area of 1/2 acre or more.

d) Easements shall:

(1) Allow no restriction of the drainage purposes.

(2) Clearly identify that the purpose includes operation and maintenance of stormwater management facilities

(3) Be shown on all plats, including widths and specific purposes (i.e.: storm sewer, maintenance access, channel, etc.)

e) The widths of easements are determined by:

(1) The size of the storm sewer, its depth, and the equipment needed to remove, replace or repair the sewer.

(2) The width of the easement for channels, storage areas and other structures is generally determined by the size of the facility and the equipment needed for maintenance, typically covering the entire facility plus 20 feet for maintenance access.

f) Drainage easements

Drainage easements (see Table below) shall be shown on the Final Plats and Final Development Plan and shall state that the City has the right of access on the easements which shall be kept clear of obstructions to the flow and/or maintenance access.

REQUIRED OPERATIONS, MAINTENANCE EASEMENTS & OUTLOT AREAS (NOT WITHIN A PUBLIC RIGHT OF WAY)				
DRAINAGE FACILITY	MINIMUM EASEMENT/OUTLOT AREA WIDTH			
Pipe Diameter	Width of Easement for Trench Depth to Pipe Invert (Feet) of:			
Inches	5	10	15	20
18"	15	15	20	30
24"	15	15	25	35
30"	15	15	25	35
36"	-1	15	25	35
42"	-1	15	25	35
48"	-1	15	25	35
54"	-1	15	25	35
60"	-1	20	30	35
>60" (2)	-1	30	30	30
	(1) Area of minimum cover, depending on structural requirements and easement location.			
	(2) For pipe diameters greater than 60 inches, repairs can be made internally and the ROW width is not dependent of excavation for repairs.			
Storm Sewer Overflow, Where Required	As required to contain the top width of the surface overflow from a 1% storm in an overland drainage easement.			
Open Channel	Top width plus 20 feet; five feet on one side and 15 feet on the side with the maintenance access road.			
Post-development 1% (100-year) Regulatory Floodplain	Area sufficient to contain the regulatory 1% (100-year) post-development floodplain			
Open Space Detention Facilities	As required to access and contain storage volume and associated facilities plus 20 feet of maintenance access around the perimeter.			
Parking Lot and Underground Detention Facilities	As required to access and contain storage volume and associated facilities.			

g) The City Engineer may approve a reduction in the required easement area for open channels and open space detention facilities that will be contained within private drainage easements and be privately maintained.

h) Regulatory floodplain

Regardless of what is shown as floodplain boundary on the adopted floodplain maps, all areas within the development having an elevation lower than the 1% (100-year) water surface elevation shall be platted as common area or outlot.

D. *Revisions to Floodplain Maps*

1. CLOMR and LOMR requirements

Changes to the boundaries of a flood plain, floodway, flood insurance zone, flood elevation, flood depth and other information shown on the officially adopted floodplain maps must be approved by the Federal Emergency Management Agency (FEMA) through the Conditional Letter of Map Revision (CLOMR) and/or Letter of Map Revision (LOMR) process.

2. LOMR-F requirements

The Floodplain Administrator (FPA) will not approve a Letter of Map Revision based on Fill (LOMR-F) in the City of Piedmont without supporting documentation verifying compliance with City ORDINANCES. The placement of fill in the floodplain shall require hydraulic studies to determine the upstream and downstream effect.

3. CLOMR requirements

A CLOMR is required to be obtained from FEMA before a project can be built if the project includes any work within the designated floodway. If the project would require any change in the effective hydraulic model, the delineated 1% (100-year) flood floodplain, or the effective flood profiles, then duplicate effective, existing, and proposed conditions hydraulic models shall be submitted to the city for review. The City may request any other analysis or documentation deemed necessary to demonstrate that the project is in compliance with the City Flood Damage Reduction ordinance and requirements of the NFIP. The City may require a CLOMR for any project if needed to ensure compliance with the NFIP.

4. LOMR requirements

A LOMR is required as a follow-up to the CLOMR, or if any work has been completed within the designated floodway, or if the project requires any change in the effective hydraulic model, the delineated 1% (100-year) floodplain, or the effective flood profiles. No occupancy permits will be approved until the LOMR is approved by the City for submittal to FEMA.

5. Mapping requirements

The new floodplain boundaries must be submitted to the City in AutoCAD or GIS format in order to update the City's floodplain mapping. Submittal shall include

the 1% (100-year) and 0.2% (500-year) floodplain boundaries, cross sections used in the hydraulic model, and the stream centerline used in the hydraulic model.

E. Acceptance of Existing Stormwater Drainage Facilities

1. Guidelines for acceptance of stormwater drainage facilities

The City of Piedmont will consider acceptance of existing stormwater drainage facilities not constructed under these criteria for ownership and maintenance without modification to the system using the following guidelines:

a) The system must be capable of conveying the regulatory 1% (100-year) storm flow using the criteria presented in this MANUAL.

b) The system must be reasonably maintainable with legal access to all facilities using the standards for access presented in these criteria.

c) Facilities submitted as part of previously approved plats, but not building permits, will be considered for acceptance.

2. Guidelines for acceptance of channels

Channels must meet the minimum standards of:

a) The channel must have a concrete liner that is structurally sound and not subject to imminent failure.

b) The Froude number for the 1% (100-year) storm flow must be less than 0.85 or greater than 1.15.

c) The 1% (100-year) storm flow must be contained within the channel banks

3. Guidelines for acceptance of storm sewer systems

Storm sewer systems must meet the minimum standards of:

a) Manholes at changes in pipe sizes and vertical alignment.

b) Manholes at changes in horizontal alignment are required unless and exception is approved by the City Engineer.

c) Manholes or other appropriate maintenance access must not be spaced farther apart than 500 feet.

d) The sewer must be structurally sound and not subject to imminent failure.

III. Construction and approval of drainage facilities.

A. Scheduling of construction of stormwater facilities

All drainage facilities shown as part of an accepted drainage plan for any portion of a development shall be installed as a part of the first phase of construction or earth moving activity on that portion of the development. If only a portion of the drainage facilities are installed on any development due to phased construction of the development, these facilities shall be constructed to function in such a manner as to be consistent with the purpose of this chapter. The use of

temporary drainage facilities may be permitted so long as they function in such a manner as to be consistent with the purpose of this chapter and that they are replaced with permanent drainage facilities prior to occupancy or use of the development. Minor deviations from the requirement for installing the drainage facilities as a part of the first phase of construction or earth moving activity may be granted by the city engineer if deemed necessary for technical reasons related to the construction as long as the purpose of this chapter is met.

B. *Maintenance of stormwater facilities during construction*

Improvements provided by the developer shall be fully and properly maintained from initial approval of facilities through either final approval of the development improvements by the City Council or the point at which the maintenance is turned over to the Homeowners Association, whichever is later. The continuing maintenance of detention or retention facilities shall be assured by the developer in the manner described for other drainage facilities.

C. *As-built drawings.*

As-built drawings shall be prepared and sealed by a professional engineer registered in the State of Oklahoma and shall be submitted to the city engineer upon completion of the construction of the final drainage plan. As-built drawings shall clearly show any changes from the accepted final drainage plan. The as-built drawings shall be reviewed by the city engineer. This review is to determine if information required by the City for future use is included and is not intended to verify that dimensions and elevations are correct. If the submitted "as-built" drawings cannot be accepted, the certifying engineer and applicant shall be advised in writing of the reasons for their disapproval. "As-built" drawings must be accepted prior to the issuance of a certificate of occupancy and the use or occupancy of a site, development, or other improvement.

D. *Maintenance bond.*

Before approval by the City Council of any improvement for public or private maintenance, a maintenance bond for the total cost of the improvement and for a period of one year shall be filed with the city clerk to ensure the correction of any defect in materials or workmanship that may be found in the improvement.

IV. CONTENTS OF DRAINAGE PLANS AND STUDIES

A. *General Requirements*

1. Requirement for Professional Engineer licensure.

   All final drainage studies shall be formulated under the direct supervision of a registered professional engineer licensed by the State of Oklahoma. Studies submitted for final acceptance shall be accompanied by payment of a fee in accordance with the schedule approved by the City Council and bear the signature and seal of the submitting engineer and, additionally, the following statement shall immediately precede the signature and seal of the submitting engineer:

"I hereby certify that I am familiar with the adopted ordinances and regulations of the City of Piedmont governing drainage facilities; that this final drainage study has been prepared under my direct engineering supervision; and that the above and foregoing final drainage study complies with all governing ordinances and the adopted drainage standards of the City of Piedmont pertaining to drainage facilities to the best of my knowledge, information and belief."

2. Certification statement

   All final drainage plans shall be formulated under the direct supervision of a registered professional engineer licensed by the State of Oklahoma. Plans submitted for final acceptance shall bear the signature and seal of the submitting engineer and, additionally, the following statement shall immediately precede the signature and seal of the submitting engineer:

   "I hereby certify that I am familiar with the adopted ordinances and regulations of the City of Piedmont governing drainage facilities; that the final drainage plan has been prepared under my direct engineering supervision; and that the above and foregoing final drainage plan complies with all governing ordinances and the adopted drainage standards of the City of Piedmont pertaining to drainage facilities to the best of my knowledge, information and belief."

3. Owner's Statement

   Following the signature and seal of the submitting engineer, the drainage plan shall bear the name, address, phone number, and signature of the owner which shall be subscribed below the following statement:

   "I (We) hereby certify that the accepted drainage plan will be implemented as designed and "as-built" drawings prepared of the completed drainage facilities under the general supervision of a professional engineer licensed by the State of Oklahoma. I (We) further certify that I am (we are) aware of my (our) responsibilities as the owner(s) of record for this piece of property, and that I (we) may be held personally (corporately) liable for any violations on this property resulting from the failure to comply with the provisions of the adopted ordinances and regulations of the City of Piedmont governing drainage facilities. Said provisions include, but are not limited to, responsibilities for proper construction, construction procedures and maintenance of the drainage facilities upon completion."

4. Property owned by a corporation

   In the case of property owned by a corporation, the statement shall use the parenthetical language and the owner's information shall also include the title of the authorized person signing the owner's certification and a notarized corporate seal.

B. *SUBMITTAL REQUIREMENTS*

The submittal requirements for drainage reports and plans are set forth in this section.

1. Summary Statement

The cover letter for the Drainage Reports shall include the following:

a) Goals and Policies

(1) Discuss how the proposed drainage plan meets the Stormwater Management goals and adheres to the floodplain policy(ies) of this Chapter.

(2) Discuss any deviation of the proposed drainage plan from the above goals and policies.

b) Drainage System Components

(1) Discuss the overall concept of the proposed system.

(2) Discuss the interaction of the major drainage and the proposed system.

c) Criteria

(1) Discuss any proposed deviation from the Chapter and methodology, as set forth in the standards, for consideration by the City for approval, if appropriate.

(2) Discuss the design criteria for the storm drainage design of the proposed system.

2. Drainage Report

a) Contents

The Drainage and Detention Report will identify and define solutions to the problems which may occur on site and off site as a result of the development. In addition, those problems that exist on site prior to development must be addressed during design. All reports shall be typed on 8 1/2" x 11" paper and bound together. The drawings, figures, plates, and tables shall be bound with the report or included in a folder/pocket at the back of the report. The report shall include a cover letter presenting the preliminary design for review and the report shall be prepared by or supervised by an engineer licensed in Oklahoma.

b) Certification:

The report shall contain a certification sheet as follows:

"I hereby certify that this report (plan) for the preliminary drainage design of (Name of Development) was prepared by me (or under my direct supervision) in accordance with the provisions of the City code of Piedmont for the owners thereof."

_____

Licensed Professional Engineer

State of Oklahoma No._____

(Affix Seal)

3. Report Contents:

The Drainage Report shall be formatted in accordance with the following outline and contain all of the applicable information listed:

a) GENERAL LOCATION AND DESCRIPTION

(1) Location

(a) Name and address of Legal Owner

(b) Vicinity Sketch

(c) Legal description of property

(d) Boundary line survey

(e) Township, range, section, 1/4 section

(f) Local streets within and adjacent to the subdivision

(g) Major drainageways and facilities

(h) Names of surrounding developments

(2) Description of Property

(a) Area in acres

(b) Ground cover (type of trees, shrubs, vegetation)

(c) Major drainageways and floodplains.

(d) Soil Types and Hydrologic Soil Groups

b) DRAINAGE BASINS AND SUB-BASINS

(1) Major Basin Description

(a) Reference to major drainageway planning studies such as Stormwater Master Plan, flood damage prevention ordinance, and flood insurance rate maps

(b) Major basin drainage characteristics

(c) Identification of all drainage system components within 50-feet of the property boundary.

(d) Overall drainage area boundary and drainage sub-area boundaries.

(2) Sub-Basin Description

(a) Historic drainage patterns of the property in question

(b) Off-site drainage flow patterns and their impact on the proposed development

c) DRAINAGE DESIGN CRITERIA

(1) Regulations:

(a) Discussion of the optional criteria selected or the deviation from the Chapter, if any

(2) Development Criteria Reference and Constraints

(a) Previous drainage studies (i.e., project master plans) for the site in question that influence or are influenced by the drainage design and how the plan will affect drainage design for the site

(b) Discussion of the drainage impact of site constraints such as streets, utilities, railways, existing structures, and development of site plan

(3) Hydrological Criteria

(a) Design rainfall

(b) Hydrologic analysis for runoff and on-site or regional stormwater detention facilities as required.

(c) Hydrologic analysis for compensatory storage requirements for any alterations of the floodplain.

(d) Runoff calculation method

(e) Hydrologic analysis for runoff to ensure conveyance.

(f) Detention discharge and storage calculation method

(g) Design storm recurrence intervals

(4) Hydraulic Criteria

(a) Routing of off-site drainage flow through the development.

(b) Location of watercourse and the appropriate hydraulic analysis for any alteration of a watercourse.

(c) Hydraulic analysis for runoff to ensure conveyance.

(d) Hydraulic analysis for compensatory storage requirements for any alterations of the floodplain.

(e) References for calculation of facility capacity

(f) Detention outlet type

(g) Grade control structure criteria used

d) DRAINAGE FACILITY DESIGN

(1) General Discussion of:

(a) Proposed and typical drainage patterns

(b) Compliance with off-site runoff considerations

(c) The content of tables, charts, figures, plates, or drawings presented in the report

(d) Anticipated and proposed drainage patterns

(2) Specific Discussion of:

(a) Drainage problems encountered and solutions at specific design points

(b) Detention storage and outlet design

(c) Photographs of downstream channel condition

(d) Maintenance access and aspects of the design

(e) Proposed maintenance agreement

(f) Easements and/or ROW dedications required

e) IMPACT ON AREA OF SPECIAL FLOOD HAZARD

(1) Location of watercourse and the appropriate hydraulic analysis for any alteration of a watercourse

(2) Hydraulic and Hydrologic analysis for run-off to ensure conveyance

(3) Hydraulic and Hydrologic analysis for compensatory storage requirements for any alterations of the floodplain

(4) Hydraulic and Hydrologic analysis for run-off and on-site or regional stormwater detention facilities, if required

(5) Floodplain boundaries with elevations to 1988 NAVD

(6) Estimate of the quantity of excavation and fill with drawings indicating each separate excavation or fill (cross sections may be required)

(7) All appropriate FEMA (Federal Emergency Management Agency) submittal data to achieve a map revision (LOMR)

(8) No Rise certification for offsite properties.

f) CONCLUSIONS

(1) Compliance with the City code of Piedmont

(a) Stormwater Master Plan

(b) Best Management Practices Plan provided and implemented

(2) Drainage Concept

(a) Effectiveness of drainage design to control damage from storm runoff

(b) Influence of proposed development on the Stormwater Master Plan recommendation(s)

g) REFERENCES

(1) Reference all criteria and technical information used

h) APPENDICES

(1) Hydrologic Computations

(a) Land use assumptions regarding adjacent properties

(b) Path(s) chosen for computation of time-of-concentration.

(c) Stormwater runoff at specific design points onsite and offsite.

(d) Historic and fully developed runoff computations at specific design points

(e) Hydrographs at critical design points if applicable

(2) Hydraulic Computations

(a) Culvert capacities

(b) Storm sewer capacity – including profile plots showing flow line, size, material and grade. Profiles shall show the natural and proposed ground line at the center line of the storm sewer. The energy grade line and hydraulic grade line for the 10, 25, and 100-year events shall be shown.

(c) Street capacity

(d) Storm inlet capacity including inlet control rating at connection to storm sewer

(e) Open channel design

(f) Check and/or channel drop design

(g) Detention area/volume capacity and outlet capacity calculations

i) COMPLETED DRAINAGE AND DETENTION CHECK LIST ASSURING THAT ALL ITEMS HAVE BEEN ADDRESSED.

4. DRAWING CONTENTS

a) Sheet-1 General Location Map: A map shall be provided in sufficient detail to identify drainage flows entering and leaving the development and general drainage patterns. The map should be at a scale of 1" = 200' to 1" = 400' and show the path of all drainage from the upper end of any off-site basins to the defined major drainageways. The map shall identify any major construction (i.e., developments, irrigation ditches, existing detention facilities, culverts, main storm sewers), along

the entire path of drainage. The size of the drawings shall be 8 1/2" x 11", 11" x 17", or 22" x 34".

b) Sheet-2 Floodplain Information: A copy of the regulatory floodplain map showing the location of the subject property shall be included with the report.

c) Sheet-3 Drainage Plan: Map(s) of the proposed development at a scale of 1" = 20' to 1" = 200' on a 22" x 34" drawing shall be included. The plan shall show the following:

d) Existing and proposed contours at 2 foot maximum intervals. In terrain where the slope is relatively flat, spot elevations and drainage arrows must be shown.

e) Property lines and easements with purposes noted: Name, address and telephone number of legal owner of property; vicinity sketch

f) Streets, roads and highways adjacent to the property

g) Existing drainage facilities and structures, natural or man-made, including, roadside ditches, drainageways, gutter flow directions, and culverts. All pertinent information such as material, size, shape, slope, and location shall also be included.

h) Overall drainage area boundary and drainage sub-area boundaries

i) Proposed type of street flow (i.e., vertical or combination curb and gutter), roadside ditch, gutter flow directions, and cross pans. Include street classifications.

j) Proposed storm sewers and open drainageways, including inlets, manholes, culverts, retaining walls, erosion control measures, and other appurtenances

k) Proposed outfall point for runoff from the developed area and facilities to convey flows to the final outfall point without damage to downstream properties

l) Routing and accumulation of flows at various critical points for the minor storm runoff

m) Path(s) chosen for computation of time-of-concentration

n) Details of detention storage facilities and outlet works

o) Location and elevations of all defined floodplains affecting the property

p) Location and elevations of all existing and proposed utilities affected by or affecting the drainage design

q) Routing of off-site drainage flow through the development

V. Technical Requirements

A. *Technical Requirements – Rainfall*

1. Rainfall intensity – duration – frequency data for the City of Piedmont may be developed from the following sources. Where the cited reference has been superseded by a subsequent version, the most recent version shall be used.
   a. "Depth-Duration Frequency of Precipitation for Oklahoma," (USGS WRI Report 99-4232).
   b. The ODOT Zone II IDF curves or equations (Te Anh Ngo, 1988)
   c. The IDF equations developed for Oklahoma City, as follows:

$I = A/(B + T_c)^E$ where T_c is in minutes and I is in iph

Where: T_c = time of concentration (minutes)
I = rainfall intensity (inches per hour)

Storm Exceedance Probability	Recurrence Interval (years)	A	B	E
50%	2	104.332663	17.298017	0.934857
20%	5	79.655486	14.827708	0.825124
10%	10	87.535303	15.882422	0.811341
4%	25	101.481871	16.773612	0.805881
2%	50	98.924724	15.864806	0.775353
1%	100	102.769257	15.860016	0.760373

2. All computed hydrographs for stormwater detention shall use a storm duration of 24 hours and the NRCS Type II distribution.

B. *Technical Requirements - Runoff*

1. All stormwater runoff shall be subject to review and approval by the City Engineer with regard to analysis, design and construction of drainageway facilities. The appropriate public authority shall have the right of maintenance or to cause to be maintained the drainageway system for its intended purposes. If a stormwater master drainage plan is adopted for the area under consideration, then the provisions of the plan shall be adhered to.
2. Use of the Rational Method:

   a) The Rational Method may be used to determine the peak discharge from a single, homogeneous watershed with an area of 40 acres or less or a time of concentration of 15 minutes or less.

b) Additionally, the Wright-McLaughlin Method for adjustment of the larger storm frequencies is required, as described in the Oklahoma Department of Transportation Drainage Design Manual (February 1988 or as amended).

c) A brief description of the Rational Method is shown below:

(1) Values for "C", the runoff coefficient, shall be obtained from the Oklahoma Department of Transportation Drainage Design Manual (February 1988 or as amended). Values for I, the rainfall intensity, shall be obtained as described in Section VII-A-1-b or c.

(2) Times of concentration shall be calculated based on the velocities obtained from travel time velocity chart contained herein.

(3) For strictly overland flow, not channelized, of 1500 feet or less, the Overland Flow nomograph or equation in the Oklahoma Department of Transportation Drainage Design Manual (February 1988 or as amended) may be used.

3. All stormwater drainage facilities for which the contributing drainage area does not meet the criteria for use of the Rational Method or which receive runoff from multiple subwatersheds shall be designed using the SCS (NRCS) Method, using the rainfall pattern approved for this unit hydrograph method. The user is referred to Section 4, Hydrology, National Engineering Handbook, Soil Conservation Service, Washington, D.C., July 1966, for specific details on SCS Unit Hydrographs.
4. Floodplain storage must be taken into consideration for drainage basins of 40 acres or larger by storage routing of sub basin hydrographs.

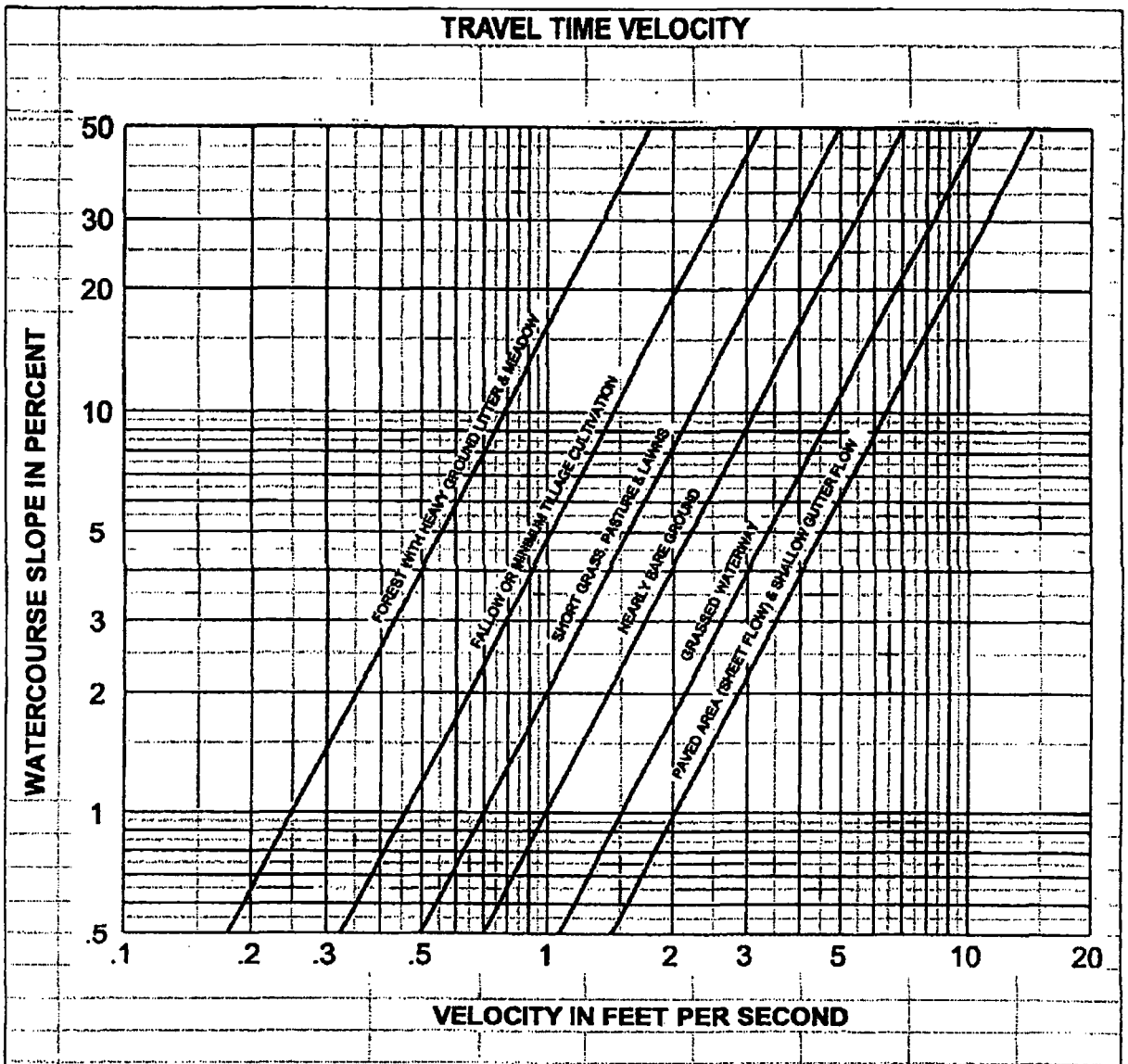

1. Valid only for overland flow paths up to 500 feet long.
2. For flow paths >500 feet long, use "Grassed Waterway" or "Paved Area" line.

5. For all hydrologic studies submitted to the City of Piedmont which involve routing of sub basin hydrographs, the following routing methods shall be used as indicated:
    a. Kinematic Wave is approved where the flow is completely contained in the channel or in a storm sewer for the 1% (100-year) storm.

b) The Storage-Discharge (Modified Puls) method is approved for areas of overbank flow, for computing reach storage for hydrograph routing and for reservoir routing.

c) The Lag method is approved when the 1% (100-year) storm is completely contained in a storm sewer flowing full.

C. ***Technical Requirements - Hydraulics of Open channels***

1. Trapezoidal channels shall be designed with a hard lined low flow channel, such as concrete.

   a) The low flow channel shall branch off to pick up any storm sewers discharging into the channel.

   b) The top of the sides of the low flow channel shall be a minimum of 6 inches lower than the adjacent main channel bottom. This is to ensure that the drainage runs over and into the low flow channel and not erodes around it.

   c) The minimum cross slope on the bottom of the trapezoidal channel shall be 2 percent.

   d) The easement for the trapezoidal channel shall include 15 feet additional width along one side of the top of the bank for an access road and 5 feet on the other side of the channel.

2. Roughness coefficients for drainage design will be as listed in tables 5-5 and 5-6, figure 5-5, pages 109 through 123, of "Open Channel Hydraulics" by Ven Te Chow (published by McGraw-Hill Book Company, 1959, or latest edition).

3. The minimum velocity in any drainage system shall be 2.5 feet per second, for all events of 20% (5 year) frequency and greater. The maximum velocity in an unlined ditch shall be as specified in "Limiting Velocities and Tractive Forces for Open Channels," (Lane, 1955) or as specified in "Permissible Velocities for Vegetated Channels," (Ree, 1949). Velocity for all storm events up to and including the 1% (100-year) shall not exceed 6 feet per second.

4. The centerline radius of a curve on an improved open channel shall be a minimum of 3 times the top width at the design flow or 100 feet, whichever is greater.

5. All improved channels shall be provided with a minimum of one foot of freeboard above normal depth of the runoff from a 1% (100-year) frequency rainstorm.

6. At all bends in improved channels, the amount of freeboard shall be increased by the following conditions:

   a) The increased freeboard height shall be maintained a minimum of one channel width upstream and downstream of the bend.

7. Where borrow ditches are allowed (see Section I.A.13) the following requirements apply:

a) Borrow ditches may be used if the 4% (25-year) storm can be contained in a trapezoidal ditch (or equivalent) with a maximum bottom width of 4 feet; side slopes 3:1 or flatter; depth of flow no greater than 2.5 feet with 0.5 feet of freeboard between the water surface and top of bank as shown below.

D. *Technical Requirements - Hydraulics of Bridges*

New bridges shall be constructed with adequate capacity to pass the 1% (100-year) storm with one foot of freeboard from the water surface to the low chord. A backwater analysis shall be required to illustrate compliance with this requirement.

E. *Technical Requirements - Hydraulics of Culverts*

1. The following Oklahoma Department of Transportation Standards shall apply except as modified by this MANUAL.
   a) "ODOT, Office of Design, Section 6, Policies and Procedures".
   b) "Standard Specifications for Highway Construction", ODOT.
   c) FHWA publication: Hydraulic Design of Highway Culverts (HDS-5).
2. FEMA Requirements - All bridges that cross FEMA studied streams shall follow the FEMA and Floodplain Administrator's submission and review requirements.
3. Zero Rise - There shall be no adverse impact (zero rise in water surface elevation) for the design discharge and the existing conditions 100-year discharge upstream or downstream of the bridge.
4. Culvert Hydraulic Design Program - HEC-RAS is the preferred hydraulic design program for culverts. HY-8 may be used if the total opening width is 20 feet or less. Nomographs in HDS-5 may be used if an assessment documenting that the method is applicable is included.
5. Design Discharge - The design discharge for all roadway culverts with a drainage basin of 40 acres or larger, or for arterial and residential roadways, shall be the 1% (100-year) discharge.
6. Headwater - the maximum headwater to culvert diameter (or rise) ratio shall be 1.5 for the 1% (100-year) storm.
7. Backwater, or the rise in the 1% (100-year) flood water surface due to the restrictions created by the construction of the culvert, shall be 1 foot or less within the owner/developer's property. No increase in water surface elevation or increase in the extent of the floodplain boundaries is allowed outside of the boundary of the owner/developer's property.
8. Velocity
   a) The minimum velocity in the culvert shall be 3 feet per second for any studied flow rate to assure a self cleaning condition.
   b) The maximum velocity in the culvert shall be 20 feet per second.

c) The velocity at the outlet of the culvert will require channel protection or an energy dissipater according to the design guidelines applicable for the downstream channel type.

9. The hydraulic design calculations for all culverts must be prepared and certified by a licensed Oklahoma Professional Engineer using the hydraulic modeling program HEC-RAS or HEC-2 (or other program approved by the City Engineer). HY-8 may be used if the conditions in Section VII-D-?? are met.
10. The radius of curve for a long box structure shall be a minimum of 3 times the maximum width of the box structure, but not less than 50 feet.
11. Inlet and Outlet Configurations

    a) Culverts are to be designed with erosion protection at the inlet and outlet areas.

    b) The headwalls or end sections are to be located a sufficient distance from the edge of the shoulder or back of walk to allow for a maximum slope of 3H:1V to the back of the structure.
12. Construction Materials

    a) All roadway culverts within the CITY shall be constructed of reinforced concrete. Reinforced Concrete Box (RCB) culverts or Reinforced Concrete Pipe (RCP) culverts are acceptable. The City Engineer may accept alternative materials.
13. Driveway culverts shall be sized to pass the 10% (10-year) design flow. CMP may be used for driveway pipe as long as a concrete slope wall or other approved end treatment is provided. Minimum diameter for driveway pipes is 15". The City Engineer may accept alternative materials.
14. The minimum size roadway culvert shall be an 18" RCP (or equivalent).

F. ***Technical Requirements - Street and Overland Stormwater Drainage***

1. The roadway and overland stormwater drainage systems shall be designed to receive and pass the runoff from a 1% (100-year) frequency rainstorm . The entire flow shall be confined within the said stormwater drainage system.
2. A storm sewer shall be required for all drainage basins wherein the requirements of this manual cannot be met through use of open channels. Open section streets are not allowed in residential development with average density greater than 1 home per 0.75 acres.
3. The street and storm sewer system shall be designed to pass the 1% (100-year) storm within the right of way. Inlets shall be designed to pass a minimum of the 4% (25-year) discharge.
4. The flow from a 4% (25-year) storm shall not exceed any of the following criteria:

    a) curb height,

    b) the crown of the street

c) the depth required to inundate the outside lane in a 4-lane or wider street.

5. Once the criteria listed in V.F.4 are exceeded, a storm sewer with a minimum capacity for the 10% (10-year) storm and sufficient additional capacity (if needed) to meet the requirements of V.F.3 and V.F.4 .
6. For non-residential streets, the first inlet shall be located no more than 400 feet from the high point in the street profile or at the point where the outside lane would be inundated, whichever is less.
7. Cross-over Flow:

   a) In the upstream sections of a drainage basin, above which the 25% storm flow is lower than the depth where the outside lane would be inundated, cross flow is allowed at intersections only.

   b) Otherwise, no cross-over flow is allowed. Inlets shall be located at intersections to collect the flow from crossing the intersection. Inlets at intersections shall be located so they do not encroach upon the curb return. No drainage structure shall be permitted at a wheelchair ramp.
8. Hydraulic design procedures may be obtained from the following sources:
9. The current state-of-the-practice for designing non-recessed storm inlets is presented in the FHWA publication Urban Drainage Design Manual Second Edition.

   a) Guidelines for design of recessed concrete inlets are presented the FHWA publication Hydraulic Characteristics of Recessed Curb Inlets and Bridge Drains.

   b) The guidelines for design of recessed metal curb openings without grates are based on the Kansas City Engineer of Transportation (KDOT) publication K-TRAN Research Project KU-98-3, Hydraulic Performance of Set-Back Curb Inlets.
10. Grated Inlets:

    a) Grated inlets without a curb opening are not permitted within City of Piedmont streets. Hydraulic information is provided for analysis of existing conditions.

       (1) The vane grate (in combination with a curb opening) is the only grate approved by the City of Piedmont within the street ROW.

    b) When a grate is used in conjunction with a curb opening directly behind the grate, only the hydraulic capacity of the grate shall be utilized to estimate the flow that is intercepted, since the curb opening portion is reserved to collect debris.
11. Paved ditches or flumes, commonly call beaver slides, shall not be allowed in lieu of inlets.

12. The overland flow portion of the collector system shall be confined to dedicated rights of way, or restricted drainage easements to assure that stormwater can pass through the development without inundating the lowest level of any building, dwelling, or structure. Restricted drainage easements shall be shown on the plat.
13. The overflow portion of the flow in a sump area shall be designed for 100% blockage of the sump area. This overflow route shall be identified as an overland drainage easement with language prohibiting blockage of flow.
14. Runoff from areas greater than one half (1/2) acre outside the roadway shall be collected before it reaches the roadway. Parking lots shall have internal drainage systems so as to reduce concentrated flow into streets. This item does not apply to single family residential lots.
15. Drainage areas, runoff from 25% (10-year) and 1% (100-year) frequency rainstorms, time of concentration, and inlet design for each inlet shall be summarized and tabulated on the plans. This summary table shall also be a part of the drainage calculations.
16. The flows and velocities for each pipe and open channel shall be summarized and tabulated as above on the plans as well as in the drainage calculations.
17. No pipe shall be installed downstream having a diameter smaller than the pipe from which it is receiving water.
18. All pipe shall meet one of the following requirements:

    a) Concrete pipe shall not be less than ASTM C-76 Class III. Corrugated metal pipes shall meet Oklahoma Department of Transportation gauge requirements for fill heights, and be bituminous coated and lined.

    b) Polyvinyl chloride (PVC) and smooth walled polyethylene (HDPE) pipe may be utilized, in sizes from 15-inches to 30 inches, in storm drainage systems. This material, however, may not be used under City streets or alley ways. Pipe must meet ODOT specifications.
19. Junctions between different pipe sizes shall be made with the top inside of the downstream pipe no higher than the top inside of the upstream pipe.
20. A manhole or junction box shall be required at all changes of grade, changes in alignment, and junctions between two or more different size pipe.
21. The horizontal distance between pipes being placed in the same trench shall be a minimum of two feet or one third the diameter of the larger pipe, whichever is greater. This would include multiple pipe crossings for culvert purposes.
22. The minimum storm sewer pipe size shall be 15 inches. Use of smaller pipes, such as for detention pond outlets, shall require prior approval by the City Engineer.

23. A minimum of 6 inches cover shall be provided over pipes and box culverts to the bottom of the subgrade in paved areas except when the box culverts are built with the top at grade.
24. All storm sewers shall be shown in profile, showing flow line, size, type and grade. Profiles shall show the natural and proposed ground line at the center line of the storm sewer. Stationing shall be continuous through manholes, along the main (longest) line, to the top of the system. Branch lines shall be stationed, starting from 0+00, from their connection with the main line. Lines shall be stationed in the profile drawing from left to right increasing upstream.
25. New box culverts and bridges with a drainage basin of 40 acres or larger shall have adequate capacity to pass 100 year fully urbanized flows with one foot of free board under the low chord. A backwater analysis shall be provided to illustrate compliance with this requirement.
26. Pipes discharging at a steep gradient into drainageways and detention facilities shall be provided with a headwall and energy dissipaters. A pipe with asteep gradient is defined as one having an energy grade line producing an outlet velocity is greater than six feet per second.
27. When storm sewers are constructed in fill areas, all materials in fill areas shall be compacted to a 95 percent standard proctor density prior to the trenching and laying of the pipe.
28. Maximum spacing between manholes or junction boxes shall not exceed 400 feet for pipes of 15 inches and 500 feet for pipes greater than 15 inches.
29. All junction boxes and manholes shall be built with one standard manhole ring and cover at grade.
30. A manhole or junction box shall be constructed at the P.C. or P.T. of all curves in large, long culverts.

G. Technical Requirements - Storage Requirements

1. For all stormwater detention facilities, the releases shall not exceed the pre-development runoff conditions for the 50% (2-year), 20% (5-year), 10% (10-year), 2% (50-year), and 1% (100-year), 24 hour storms, and must be conveyed to a public stormwater conveyance system with no negative impact downstream.
2. The provisions of the stormwater detention plan shall adhere to any stormwater master drainage plan that is adopted in the area under consideration.
3. The intent of the stormwater detention requirements shall be identified at the preliminary plat stage of the project review. The 1% (100-year) storm floodplain areas and stormwater detention site locations shall be shown on the preliminary plat to illustrate how these areas will be managed during and after construction.

4. All detention storage volume shall be located above the BFE in FEMA mapped areas, or above the 1% (100-year) floodplains as mapped by the City for regulatory floodplains.
5. Additional detention storage, in excess of the required storage for a drainage area, shall not be acceptable to satisfy the detention requirements for a tract of land downstream of the detention facility.
6. All stormwater detention facilities shall be located at the downstream end of the development to ensure that "flash" runoff from uncontrolled areas does not contribute to adverse conditions offsite.
7. If a tract of land being developed is located in more than one drainage area, then grading work to divert flows from one drainage area to another will not be permitted. Compensatory storage will not generally be permitted in one drainage area for that required in another. Exceptions may be granted by the City Engineer.
8. Detention facilities shall not be used for compensatory storage and shall not encroach into any floodplain area.
9. All dikes and spillways on detention facilities shall have a longitudinal profile of the outlet showing the 1% (100-year) water elevation in the pond and the tailwater elevation downstream.
10. All dikes and spillways on detention facilities shall have typical cross sections shown on the plans.
11. Side slopes on detention facilities shall not be steeper than 4:1 horizontal to vertical. Steeper side slopes may be allowed should the site conditions necessitate; however, methods for proper erosion control must be established and illustrated, and the procedures for maintaining these steeper side slopes must be established and shown on the plan.
12. Detention facilities shall be provided with a low flow channel from the inlet to the outlet structure to transmit low flows and the low flow channel shall be approved by the City, the low flow channel shall be concrete lined and of sufficient width and geometry to allow for proper maintenance. The maintenance procedure shall be shown on the plans.
13. The easements for the storm sewers and detention ponds shall appear on the plat.
14. An accessway at least 20 feet wide shall be provided to any detention area. Access may be provided by frontage on a dedicated public street or by an access easement from a dedicated public street to the detention area.

    If a detention area is larger than ½ acre with a depth of 3 or more feet, the access road shall continue into the pond and shall have a maximum grade of 10 percent. The access road shall be paved, 12 feet wide, from the top of the bank to the bottom of the detention pond and in the bottom of the detention pond to locations of high maintenance.

15. An operations and maintenance guide shall be prepared to illustrate the proper use and care of the detention facility, and by whom, when and how. The guide shall include text and diagrams.
16. Any dam or berm constructed shall be designed and constructed under the supervision of a Registered Professional Engineer.
17. The pipe exiting the outlet structure through the dam shall be a 15" RCP or larger pipe. Alternative materials or an equivalent arch pipe section may be allowed on a case-by-case basis. If a smaller outlet is required, an upstream orifice plate shall be used to constrict the outflow.
18. Spillways on detention facility dams shall be constructed to pass the 500 year flood event with a minimum of one (1) foot of freeboard on the earth dam structure.
19. All detention facilities shall meet the Oklahoma Water Resources Board's requirements. The design of detention facilities that have a certain storage volume and/or dam height are subject to regulation by the Oklahoma Water Resources Board.
20. The classification criteria and design requirements are available for download at the OWRB website on the Rules and Regulations page: http://www.owrb.ok.gov/util/rules/rules.php.
21. Freeboard Requirements -all detention facilities shall be designed to meet OWRB requirements or the requirements set forth in this Manual, whichever is stricter. Freeboard requirements are shown in the table below:

Freeboard Requirements for Stormwater Detention Facilities			
Embankment or Excavated Pond	1% (100-year) water surface elevation depth	1% (100-year) water surface elevation	0.2% (500-year) water surface elevation
Embankment or Excavated	< 18-inches	Contained within a dedicated Stormwater detention easement.	
Embankment	18-inches to 6 feet	Contained within the detention facility with one foot of freeboard to the top of the embankment.*	

Freeboard Requirements for Stormwater Detention Facilities			
Embankment or Excavated Pond	1% (100-year) water surface elevation depth	1% (100-year) water surface elevation	0.2% (500-year) water surface elevation
Embankment	> 6 feet		Contained within the detention facility with one foot of freeboard to the top of the embankment.*
Excavated	>18-inches	Contained within the detention facility with one foot of freeboard to the top of the embankment.*	

*unless more stringent OWRB dam safety requirements control, as outlined in Title 785:25-3-3 of the Oklahoma Administrative Code, found at http://www.oar.state.ok.us/viewhtml/785_25-3-3.htm.

H. Design Standards – Stormwater Detention Facilities

1. General Design Criteria

All calculations and plans for detention facilities shall be presented to the CITY for review and approval. Information submitted shall include:

a) Inflow and outflow hydrographs.

b) A comparison of the pre-project and with-project peak discharges at the point(s) of discharge from the development and at points downstream as required by the City Engineer.

c) Elevation-Storage-Discharge relationships.

d) Discharge rating curves for each component of the outflow structure.

e) Tailwater rating curves at the outlet. Tailwater shall be considered when designing the outlet structure.

f) Erosion protection measures at the outlets and spillway.

g) Embankment design in accordance with OWRB guidelines, including slope protection in case of overtopping, slope stability, and maintenance access.

h) Multiple use plans (parks, playgrounds, sports fields, etc.).

i) Trash rack design.

2. On-Site Stormwater Detention

a) On-site detention facilities shall shown to be effective in controlling the peak discharges from the development immediately downstream of the development.

b) The volume of on-site detention required is calculated by comparing the total runoff volume, in acre-feet, of the existing condition 1% (100-year) flood with the volume of the proposed conditions 1% (100-year) flood. The comparison is made using the existing conditions and proposed conditions hydrographs, calculated as specified in Section V-B and subsections. . The Modified Rational Method may be used to determine detention volume required for a single, homogeneous watershed no larger than 40 acres or with a time of concentration of no more than 15 minutes. The detention must discharge directly off-site to a borrow ditch or other major storm drainage component. Hydrograph methods shall be used if the discharge from the detention is to be combined with discharge from another sub-watershed for purposes of routing through or off the site or sizing downstream structures.

c) On-site detention facilities shall be designed so that there is no increase in the peak discharge from any point of the development during the 50% (2-year), 20% (5-year), 10% (10-year), 2% (50-year), and 1% (100-year) flood events. This applies at the point(s) of discharge from the development as well as at points downstream, as required by the City Engineer.

d) The erosive effects of the increased runoff volume from the on-site detention facility shall be mitigated by armoring the stream bank downstream.

e) Mitigation for other water quality impacts of the urban runoff leaving the on-site detention facility shall be provided.

3. Design Standards for Open Space Detention

a) All earth slopes and areas subject to erosion, such as, adjacent to trickle channels, inlet structures, and outlet structures, shall be slab sodded with Bermuda sod or protected with other erosion control measures. All other earth surfaces, within the area designated for detention pond site, shall have an established growth of bermuda grass or other approved species. All grass covered areas shall be fertilized, to current recommendations, watered and in an established growing condition prior to completion and approval of the detention pond.

b) Detention facilities shall be environmentally sound and compatible with the area (neighborhood).Where feasible, multiple uses for the facilities should be established.

c) The city will accept dedication and maintenance responsibilities for drainage and detention facilities on a case-by-case basis under advisement of the City Attorney and Engineer. Otherwise, the maintenance responsibility shall belong to the private sector. A written agreement between the development and the City defining the maintenance requirements and responsible parties shall be made prior to the development's acceptance by the City.

4. Design Standards for Parking Lot Detention

a) Parking Lot detention may be used on properties that do not receive offsite water.

b) The maximum depth in the detention pond shall be 12 inches, occurring during the 1% (100-year) storm.

c) The total flooded area during the 100-year storm shall not exceed 25% of the parking areas and drives.

d) The unit volume curves included herein may be used to design the outlet if a two-stage weir is used.

e) The 20% (5-year) storm must completely fill the bottom 6 inches up to the first weir.

f) The 1% (100-year) volume must fill the entire 12-inch depth of water.

g) There must be a 6-inch drop off from the outlet elevation to the ground immediately downstream.

UNIT VOLUME DETENTION CURVES

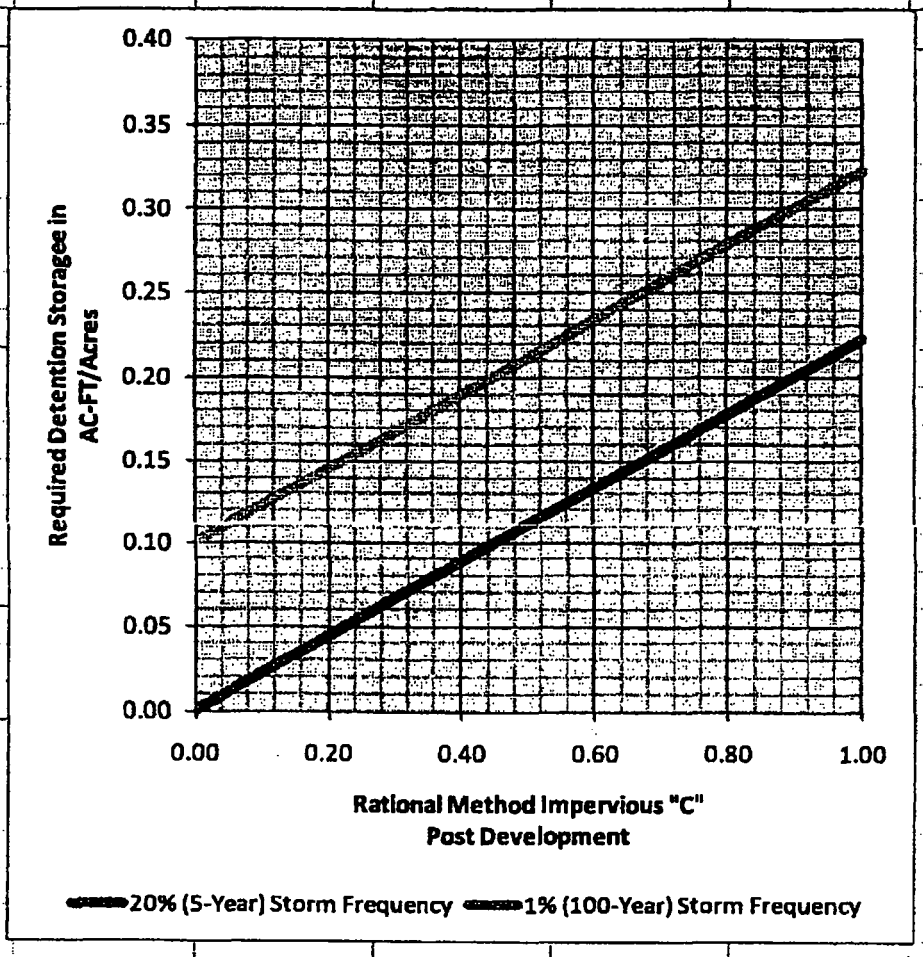

Pre-Developed 1% (100-Year) Rational Method	Outflow Rate for Drainage CFS/AC	
"C"	20% (5-Year)	1% (100-Year)
0.1	0.0	0.6
0.2	0.1	1.3
0.3	0.2	2.0
0.4	0.6	2.9
0.5	1.8	4.9
0.6	3.6	7.5

Reference: City of Tulsa Stormwater Management Criteria Manual, Updated 1993

h) If a pipe and weir outlet is used, the same criteria apply, with the weir set at the 20% (5-year) elevation.

i) If a pipe outlet is used, a City-approved trash rack must be placed upstream.

VI. Green Development

A. The City encourages developers to incorporate stormwater management techniques that include water quality benefits, also known as "Green Infrastructure" or "Low Impact Development."

B. Specific structural requirements of this manual, such as requirements for concrete liners, may be waived by the City Engineer to accommodate use of low impact development techniques. In no case will any requirements dealing with off-site, upstream, or downstream impacts be waived.

C. Proposals for Green Development shall be presented to the City as an application for a Planned Unit Development (PUD). The PUD design statement shall include specific water quality goals and analysis demonstrating that they will be achieved through the methods proposed.

APPENDICES

1. SCHEDULE OF FEES AND CHARGES
2. SCHEDULE OF BONDS AND INSURANCE
3. ELECTRIC FRANCISE
4. GAS FRANCHISE
5. PIEDMONT MUNICIPAL AUTHORITY
6. CABLE TELEVISION (Reserved)
7. PROVISIONS OF SELECTED STATE STATUTES APPLICABLE TO CITY
8. APPENDIX OF ORDIANCES NOT IN CODE
9. DISPOSITION TABLE
10. GENERAL ORDINANCES NOT CODIFIED

APPENDIX 1

SCHEDULE OF FEES AND CHARGES

A schedule of fees and charges, or fee schedule, is set out in this appendix for the purpose of providing a clear and concise listing of the fees and charges authorized by the provisions of this code in payment for licenses, permits and services performed in accordance with the regulations and controls upon which the licenses and permits are conditioned and to provide uniformity in the supervision and administration of the issuance of licenses and permits and the collection of the amounts prescribed. The heading gives the title of the appropriate chapters and articles as applicable.

Code Section		Fee
	ADMINISTRATION AND GOVERNMENT	
	City Records	
2-3	Copying and search, per copy, per page	
	Law enforcement records, per report	2.00
	Municipal records, per page	.25
	ALCOHOLIC BEVERAGES	
	Alcoholic Beverages	
3-102	Occupation tax relating to alcoholic beverages	
	Brewer	1,250.00
	Distiller	3,125.00
	Winemaker	625.00
	Oklahoma winemaker	75.00
	Rectifier	3,125.00
	Wholesaler	3,500.00
	Class B Wholesaler	625.00
	Retail package store	300.00
	Retail dealers (Class I or II, nonintoxicating)	
	Onsite consumption	20.00
	Offsite consumption	10.00
	Mixed beverage establishment (Class I)	
	Initial	600.00
	Renewal	500.00
	Mixed beverage establishment (Class II)	
	Initial	1,000.00
	Renewal	900.00
	Caterer, Initial	1,000.00
	Renewal	900.00
	Special Event Licensee, per day	50.00

3-104	Certificate of compliance with zoning fire health and safety codes	None
3-104	Certificate of compliance issued to ABLE Commission	None

Nonintoxicating Beverages

3-203	Retail dealers license for For consumption on or off premises; annually	20.00
	In original packages and not for consumption on premises; annually	10.00

ANIMALS

Animal Regulations

4-121	Rabies vaccination certificate, Set by Veterinarian	
4-133	Impounding and keeping animal	
	Redeeming animal not licensed to pay required license	Not Applicable
	Dog not vaccinated against rabies to pay deposit to be refunded upon proof of vaccination	Not Applicable
	Euthanizing fee, Set by Veterinarian	
4-134	Person adopting animal from impoundment shall pay adoption fee, costs of any necessary vaccinations and a deposit	10.00
4-161	Supervised quarantine at owner's expense, Set by Veterinarian	
4-173	Expenses of impounding vicious, dangerous or diseased animal	15.00 pickup fee 4.00 per day boarding fee

BUILDING REGULATIONS AND CODES

Licenses and Fees, Permits, Bond and Insurance

5-101	Registration certificate for:		
	Building:	contractors	Not applicable
		journeymen	
		apprentices	
	Electrical:	contractors	40.00
		journeymen	40.00
		apprentices	40.00
	Plumbing:	contractors	40.00
		journeymen	40.00
		apprentices	40.00
	Mechanical:	contractors	40.00
		journeymen	40.00
		apprentices	40.00
5-121	Building permits		
	Repair, remodel, building permit (minimum)		12.50
	Residential, commerical, industrial, warehouse construction		
	Under 2,000 square feet		75.00
	2,000 square feet or more		100.00
5-124	Inspection fees, per required inspection.		15.00

Building Code and Regulation

5-222 to 5-224	Permit and fee to move building into city	25.00
	Permit fee to move buiding through city	75.00

Plumbing Code and Regulations

5-312 to 5-314	Plumbing contractor's registration	See above

Electric Code

5-403	Electrical installation permit See Building permit above

5-422 to 5-427	Electrical registration certificate	See above

Mechanical Code

5-503	Permit for mechanical work See building permit above	
5-512 to 5-514	Mechanical registration certificate	See above
5-601 et seq	Mobile home regulations	

Power Generation Towers and Wind Generators

5-803	Permit required for construction	50.00

COURT

Court Procedure

6-112	Filing criminal offense in municipal court, court cost fee (may be waived)	15.00
6-119	Temporary cash bond not less than nor more than maximum penalty	10.00
6-127	Judgment of conviction costs or maximum state law, plus fees and mileage of jurors of jurors and witnesses plus fine imposed	15.00
6-128	Witness fees paid plus mileage, per day	15.00

FINANCE AND TAXATION

Purchases by City

Sales Tax

7-306	4% Excise tax	

Use Tax

7-401	4% Use tax	

911 Emergency Service Fee

7-501	3% service fee for 911 emergency telephone fee	

Telephone Exchange Fee

7-601	2% of gross revenues for annual inspection fee and service charge for operating telephone exchange	

Utility Fee

7-701	2% of gross receipts from residential and commercial sales of gas and electricity	

HEALTH AND NUISANCES

Weeds Grass or Trash

8-205	Actual costs of labor, maintenance and equipment required not to exceed $500.00	

Dilapidated Building

8-302	Dismantling and removal by city; actual cost	

Abandoned, Junk Vehicles

8-403	Permit for reconstruction/repair of vehicles costs of any mailing to obtain consents; maximum	50.00
8-413	Redemption of impounded vehicles or motor vehicle, prior to sale; actual and reasonable expense of removal plus storage	

LICENSE AND BUSINESS REGULATIONS

General Provisions

9-110 to 9-112	Licenses and permit fees	
	Annual	20.00
	Combined business under one ownership occupying same building	25.00

Itinerant Vendors

9-202	License fee	See above
9-202	Application processing fee	25.00
9-202 to 9-205	Blanket license for owner or lessees of buildings covering all itinerant vendors who will be established in building	50.00

OFFENSES AND CRIMES

Offenses Against Property

10-329	Fire works when permitted by city	None

Offenses Against Public Peace

10-405	Parade permit (street fair, street dance, carnival or assemblage)	None

PLANNING, ZONING AND DEVELOPMENT

Oil and Gas Regulations

12-505	Filing Fee	2,500.00
12-506	Processing fee (where permit is refused)	500.00
12-508	Injection well permit fee	2,500.00
12-509	Annual inspection fee per well	270.00
12-539	Permits for conduits in streets and alleys	250.00

12-540	Annual inspection and renewal for conduit, per rod of conduit	1.00

Flood Plain Regulations

12-607 & 12-611	Development permit	None

PUBLIC SAFETY

Fire Services

13-121	Contracts outside corporate limits Intergovernmental agreements	None
13-122	Payment in amount by negotiation	
13-124	Charges for calls made outside city, per hour, per vehicle	150.00

STREETS AND SIDEWALKS

Curb and Street Cuts

14-201 to 14-205	Pavement cut permit	
	Registration fee, no road crossing	15.00
	Cutting, opening or tunneling	30.00
	Road and alley nonrefundable filing fee	250.00
	Bond for cutting or opening asphalt	1,500.00
	Bond for tunneling	1,500.00
	Bond for cutting or opening concrete	2,500.00
14-211 & 14-212	Curb cut permit	

TRAFFIC AND VEHICLES

Impoundment

15-1908	Stolen vehicles removed one hour after notification by owner's arrangement	
15-1912	Impoundment costs and accrued storage charge.	

APPENDIX 2

SCHEDULE OF BONDS

For purpose of providing a clear and concise listing of the contractors and similar performance bonds authorized by the provisions of this code to secure the performance of various duties required by this code, and to provide uniformity in the supervision and administration of the issuance of licenses and permits, a schedule of such bonds, or bond schedule, is hereby set forth in this appendix. Headings give the titles of the appropriate parts as applicable.

Code Section		
	ADMINISTRATION AND GOVERNMENT	
2-110	City officers and employees	Set by council
	BUILDING REGULATIONS AND CODES	
5-225	Moving building	Set by council
5-313	Plumbing contractor	Set by state law
5-425	Electrical contractors	Set by state law
5-513	Mechanical contractors	Set by state law
	COURT PROCEDURE	
6-108	Clerk of court	Set by council
	LICENSE AND BUSINESS REGULATIONS	
9-102	Some license and business issuance conditioned upon approval of bond	
9-206	Itinerant vendors, minimum surety bond where receive money before delivery goods	500
	PLANNING, ZONING AND DEVELOPMENT	
12-507	Oil and gas well bond, initial Reduced to $10,000 after completion and compliance with chapter	25,000

STREETS AND PUBLIC WORKS

14-201 et seq Bonds for Street and Curb Cuts

Bond for cutting or opening asphalt	1,500.00
Bond for tunneling	1,500.00
Bond for cutting or opening concrete	2,500.00

APPENDIX 3

ELECTRIC FRANCHISE

Section 1	Definitions.
Section 2	Grant of franchise.
Section 3	Not to impede traffic.
Section 4	Indemnification.
Section 5	Rates.
Section 6	Assignment.
Section 7	Franchise fee.
Section 8	Electric service to town.
Section 9	Election.
Section 10	Acceptance.
Section 11	Supersedes other franchises.
Section 12	Emergency.

SECTION 1 DEFINITIONS.

The word "town" as hereinafter used shall mean and designate the Town of Piedmont, Canadian and Kingfisher Counties, Oklahoma, and the word "company" as hereinafter used shall mean and designate the Oklahoma Gas and Electric Company, a corporation organized and existing under and by virtue of the laws of the State of Oklahoma and its successors and assigns. (Ord. No. 198, 10/8/84)

SECTION 2 GRANT OF FRANCHISE.

A. The town hereby grants to the company the right, privilege and authority to produce, transmit, distribute and sell electricity within the corporate limits of the town for all purposes for which it may be used, to the town, its inhabitants and the public generally, and the right, privilege and authority to construct, maintain and operate a system of poles, wires, conduits, transformers, substations, and other facilities and equipment in, upon, across, under and over the streets, alleys, public grounds and other places in each and every part of the town for the purpose of producing, transmitting, distributing and selling electricity to the town, its inhabitants, and to the public generally.

B. The franchise hereby granted shall be effective from and after the date of approval of this ordinance by the qualified electors of the town and acceptance by the company, and shall remain in full force and effect for a period of twenty-five (25) years. Nothing in this ordinance shall be construed to prevent the town from granting an electric franchise to any other person, firm, or corporation. (Ord. No. 198, 10/8/84)

SECTION 3 NOT TO IMPEDE TRAFFIC.

The company shall construct, operate and maintain its property in such manner as will, consistent with necessity, not obstruct nor impede traffic unduly. (Ord. No. 198, 10/8/84)

SECTION 4 INDEMNIFICATION.

The company shall defend and indemnify the town against all liability for injury to any person or property caused by the negligence of the company in the construction, operation and

maintenance of its property within the town. (Ord. No. 198, 10/8/84)

SECTION 5 RATES.

Electric service provided hereunder to the town, its inhabitants, and to the public generally, and rates charged therefor shall be in accordance with orders, rules and regulations of the Corporation Commission of the State of Oklahoma or other governmental authority having jurisdiction. (Ord. No. 198, 10/8/84)

SECTION 6 ASSIGNMENT.

The company shall have the right to assign this franchise and the assignee by written acceptance thereof shall be bound by all the provisions hereof. An authenticated copy of such assignment and acceptance shall be filed with the clerk of the town. (Ord. No. 198, 10/8/84)

SECTION 7 FRANCHISE FEE.

A. From and after the approval and acceptance of this franchise, and in consideration of the granting of this franchise, the company agrees to pay and shall pay to the town an annual franchise tax in an amount equal to three percent (3%) of its gross revenues arising from the sale of electricity within the corporate limits of the town, such payment to be made on or before July 25 of each year, after deducting therefrom any amount due the company from the town.

B. The company shall abide by any order, rule or regulation of the Corporation Commission of the State of Oklahoma requiring the listing separately of all or any portion of such franchise tax on electric bills to customers.

C. Such franchise taxes paid by the company to the town shall be in lieu of all other franchise, excise, license, occupation, privilege, inspection, permit, or other fees, taxes or assessments, except ad valorem taxes. (Ord. No. 198, 10/8/84)

SECTION 8 ELECTRIC SERVICE TO TOWN.

The company shall furnish to the town without charge each fiscal year during the term hereof electric current to be used exclusively by the town for operation of traffic signal lights and buildings occupied and operated by the town for municipal purposes, to be applied by the company as a credit to billings to the town, provided that such electric current shall not exceed one-half of one percent (0.5%) of the kilowatt-hours sold by the company to customers within the corporate limits of the town during the preceding fiscal year. (Ord. No. 198, 10/8/84)

SECTION 9 ELECTION.

A special election is hereby called for the purpose of submitting this ordinance to the qualified electors of the town residing within its corporate limits for their approval or disapproval, provided the company shall pay the cost of such election. The election shall be held on the 4th day of December, 1984, between the hours of 7:00 A.M. and 7:00 P.M. The mayor of the board of trustees is authorized and directed to issue an election proclamation calling such election and is further directed to take all steps that may be necessary for holding the election and for the submission of this ordinance to the qualified electors of the town. If a majority of the qualified electors of the town voting thereon fail to approve this franchise at the election, no rights shall accrue hereunder. (Ord. No. 198, 10/8/84)

SECTION 10 ACCEPTANCE.

In case the franchise hereby granted is approved at the election, the company shall, within thirty (30) days from the date of such approval, file with the clerk of the town, in writing, its acceptance. In the event the company fails to accept within the period, such failure shall be deemed a rejection of the franchise. (Ord. No. 198, 10/8/84)

SECTION 11 SUPERSEDES OTHER FRANCHISES.

The franchise hereby granted shall, on its effective date, supersede and terminate any previous franchise granted to or held by the company. (Ord. No. 198, 10/8/84)

SECTION 12 EMERGENCY.

An emergency is hereby deemed and declared to exist whereby it is necessary for the preservation of the public health, safety and welfare of the inhabitants of the town that this ordinance take effect immediately from and after its approval, adoption and publication as provided by law. (Ord. No. 198, 10/8/84)

APPENDIX 4

GAS FRANCHISE

(RESERVED)

Ed. Note: See Part 7 of this code for two percent utilities fee for gas utilities in lieu of franchise.

APPENDIX 5

THE PIEDMONT MUNICIPAL AUTHORITY

Ed. Note: This Trust Declaration is the Original Trust for the Authority. Following is the Amended Trust Declaration.

Article I	Creation of trust.
Article II	Business conducted in name of trust.
Article III	Purposes.
Article IV	Duration of trust.
Article V	The trust estate.
Article VI	The trustees.
Article VII	Powers and duties of the trustees.
Article VIII	Beneficiary of trust.
Article IX	Termination of trust.
Article X	Acceptance

KNOW ALL MEN BY THESE PRESENTS:

THIS TRUST INDENTURE dated as of the 2nd day of April, 1973, by Jerry Anduss (hereinafter referred to as the Trustor), and Jerry Anduss, Virginia Simpson and Willard Every and their respective successors in office, to be known as the Trustees of the Piedmont Municipal Authority, who shall be and are hereinafter referred to as Trustees of the Authority (hereinafter referred to as Trust) herein set out.

WITNESSETH:

That in consideration of the payment by the Trustor to the Trustees of the sum of One Dollar ($1.00), receipt of which is hereby acknowledged, the mutual covenants herein set forth, and other valuable considerations, the said Trustees agree to hold, manage, invest, assign, convey and distribute as herein provided, authorized and directed, such property as Trustor, or others, may from time to time assign, transfer, lease, convey, give, bequeath, devise, or deliver unto this Trust or the Trustees hereof.

TO HAVE AND TO HOLD such property and the proceeds, rents, profits and increases thereof unto said Trustees and the Trustees' successors and assigns, but nevertheless in trust, for the use and benefit of the Town of Piedmont, Oklahoma, hereinafter referred to as Beneficiary, and upon the following trusts, terms and conditions herein stated.

ARTICLE I

CREATION OF TRUST

The undersigned Trustor creates and establishes a trust for the use and benefit of the Beneficiary, to finance, operate, construct and administer any public works, improvement or facilities, and for the public purposes hereinafter set forth, under the provisions of Title 60, Oklahoma Statutes 1971, Sections 176 to 180.3 inclusive, the Oklahoma Trust Act and other applicable statutes of the State of Oklahoma.

The Trustees of this Trust shall conduct all business and execute or authorize the execution of all instruments in the name of this Trust, and otherwise perform the duties and functions required in the execution of this Trust.

ARTICLE II

The Trustees of this Trust shall conduct all business and execute or authorize the execution of all instruments in the name of this trust, and otherwise perform the duties and functions required in the execution of this Trust.

ARTICLE III

The purposes of this Trust are:

(1) To acquire, construct, reconstruct, extend, lease, purchase, install, equip, maintain, repair, enlarge, remodel and operate buildings and other facilities for use by the United States of America, or the State of Oklahoma, or for use by authorities or agencies of the United States of America or of the State of Oklahoma or of any municipality thereof, or for use by municipal or other political subdivisions of the State of Oklahoma, including the Beneficiary hereof or for the use of corporations, individuals, partnerships, associations or proprietary companies for industrial development; to plan, establish, develop, construct, enlarge, improve, extend, maintain, equip, operate, lease, furnish, provide, supply, regulate, hold, store and administer utilities and/or buildings or other facilities either within or without the territorial boundaries of the Beneficiary which are or shall be of public use, or useful in securing, developing and maintaining industrial and manufacturing activities including but without limitation, water, sewer, electrical, garbage, trash disposal, recreational and industrial facilities; and to service machinery or equipment in connection with such utilities, buildings and facilities.

(2) To hold, maintain and administer any leasehold rights in and to physical properties demised to the Beneficiary and to comply with the terms and conditions of any such lease.

(3) To acquire by lease, purchase, production, reduction to possession or otherwise, and to plan, establish, develop, construct, enlarge, improve, extend, maintain, equip, operate, furnish, provide, supply, regulate, hold, store and administer any and all physical properties (real, personal or mixed), rights, privileges, immunities, benefits and any other thing of value, designated or needful for utilization in furnishing, providing or supplying the aforementioned service, utilities, buildings and facilities; to finance and refinance and to enter into contracts of purchase, lease-purchase or other interest in or operation and maintenance of said properties, and revenues thereof, and to comply with the terms and conditions of any such contracts, leases or other contracts made in connection with the acquisition, equipping, maintenance and disposal of any said property; and to relinquish, dispose of, rent or otherwise make provisions for properties owned or controlled by the Trust but no longer needful for trust purposes.

(4) To perform on behalf of the Beneficiary the functions and powers as authorized by industrial development statutes.

(5) To provide funds for the cost of financing, refinancing, acquiring, constructing, purchasing, equipping, maintaining, leasing, repairing, improving, extending, enlarging, remodeling, holding, storing, operating and administering any or all aforesaid property, improvements, buildings,

facilities and all properties (real, personal or mixed) needful for executing and fulfilling the Trust purposes as set forth in this instrument and all other charges, costs and expenses necessarily incurred in connection therewith and in doing so, to incur indebtedness, either unsecured or secured by all or any part of the Trust Estate and its revenues.

(6) To expend all funds coming into the hands of the Trustees as revenue or otherwise for the payment of any indebtedness incurred by the Trustees for the purposes specified herein, and in the payment of the aforesaid costs and expenses, and in payment of any other obligation properly chargeable against the Trust Estate, and to distribute the residue and remainder of such funds to the Beneficiary.

ARTICLE IV

DURATION OF TRUST

This Trust shall have duration for the term of duration of the Beneficiary and terminated as hereinafter provided.

ARTICLE V

THE TRUST ESTATE

The Trust Estate shall consist of:

(1) The funds and property presently in the hands of the Trustees or to be acquired or constructed by Trustees and dedicated by the Trustor and others to be used for trust purposes.

(2) Any and all leasehold rights remised to the Trustees by the Beneficiary as authorized and empowered by law.

(3) Any and all money, property (real, personal or mixed), rights, choses in action, contracts, leases, privileges, immunities, licenses, franchises, benefits, and all other things of value coming into the possession of the Trustees pursuant to the provisions of this Trust Indenture.

(4) Cash in the sum of $1.00 paid to Trustees, receipt of which is hereby acknowledged by the Trustees.

The instruments executed for each project, and such issuance of Trustees Bonds and other indebtedness, shall set out the specific property of the Trust Estate exclusively pledged and mortgaged for the payment of such indebtedness.

ARTICLE VI

THE TRUSTEES

(1) The Trustees of this Trust shall be citizens and residents of the Beneficiary who are the persons presently constituting the President of the Board of Trustees and members of the governing board of the Beneficiary, and the persons who shall be their successors as president of the Board of Trustees, and members of said governing board of said Beneficiary, and each such successor in office shall without any further act, deed or conveyance, automatically become Trustees of this Trust and become fully his predecessor hereunder with like effect as if originally named as

a Trustee herein.

(2) The person who shall be the President of the Board of Trustees of the Beneficiary, shall become automatically the Chairman of the Trustees and shall preside at all meetings and perform other duties designated by the Trustees. The Trustees shall designate the time and place of all regular meetings. All actions by the Trustees pursuant to the provisions of this Trust Indenture shall be approved by the affirmative vote of at least a majority of the Trustees qualified to act as such under the provisions of this Trust Indenture. The Trustees shall select one of their members to be Vice-Chairman who shall act in the place of the Chairman during the latter's absence or incapacity to act.

(3) The person who shall be the Town Clerk of the Beneficiary, shall act as Secretary of the Trustees. The Secretary shall keep minutes of all meetings of the Trustees and shall maintain complete and accurate records of all their financial transactions, all such minutes, books and records to be on file in the office of the Trust. All meetings of the Trustees shall be open to the public, and the books, records and minutes of the Trustees shall be considered as public records and available for inspection at all times by any interested party.

(4) The person who shall be the Town Treasurer of the Beneficiary shall act as Treasurer of the Trustees.

(5) The Trustees may appoint a general manager of the Trust Estate, and the Trustees may employ such other clerical, professional, legal and technical assistance as may be deemed necessary in the discretion of the Trustees to properly operate the business of the Trust Estate, and may fix their duties, terms of employment and compensation. Any such employee may be a person who shall be an officer or employee of the Beneficiary, in which event such officer or employee may receive compensation from the Trust Estate. All Trustees shall serve without compensation but shall be reimbursed for actual expenses incurred in the performance of their duties hereunder. In the event a general manager for the Trust Estate is appointed by the Trustees, the said general manager shall administer the business of the Trustee Estate as directed from time to time by the Trustees.

(6) Every person hereafter becoming a Trustee first shall take the oath of office required of an elected public officer and every officer and employee who handles funds of a public trust shall furnish a good and sufficient fidelity bond in an amount and with surety as may be specified and approved by the persons constituting a majority of the governing body of the Beneficiary of this Trust. Such Bond to be in a surety company authorized to transact surety business in the State of Oklahoma. The cost of said Bond shall be paid from funds of the Trust Authority. The oaths of office shall be administered by any person authorized to administer oaths in the State of Oklahoma, and shall be filed in the office of the Clerk of the Beneficiary.

(7) Trustees may be removed from office for cause, including incompetency, neglect of duty, or malfeasance in office, by a District Court having jurisdiction. In the event of a removal of a Trustee under this Section, a successor Trustee shall be appointed as provided in this Trust instrument. Provided, however, in the event a Trustee is so removed by a District Court who is also a member of the governing Board of the Beneficiary the successor Trustee shall be appointed by the judge of the Court wherein the removal occurred; said successor Trustee shall serve only until the removed Trustee ceases to serve as a member of the governing board of the Beneficiary and his successor on said Board has qualified as provided in this Trust Indenture.

(8) The Trustees are authorized to contract, in connection with the incurring of any

funded indebtedness secured by the Trust Estate and/or its revenues, or any part of either or both, that in the event of a default in the fulfillment of any contract obligation undertaken on behalf of the Trust Estate or in the payment of any indebtedness incurred on behalf of the Trust Estate, that a Temporary Trustee or Trustees or Receiver shall be appointed to succeed to the rights, powers and duties of the Trustees then in office. Any such contract, if made, shall set on the methods by which such Temporary Trustee or Trustees or Receiver shall be appointed, and operate the Trust Estate and provide for compensation to be paid, and appointment to be vacated and permanent Trustees to be automatically reinstated upon termination of all defaults by which their appointment was authorized.

(9) Bonds or other evidences of indebtedness to be issued by the Trustees shall not constitute an indebtedness of the State of Oklahoma, or of the Beneficiary, or personal obligations of the Trustees of the Trust, but shall constitute obligations of the Trustees payable solely from the Trust Estate.

(10) The Trustees, the State of Oklahoma, and the Beneficiary hereof shall not be charged personally with any liability whatsoever by reason of any act or omission committed or suffered in good faith or in the exercise of their honest discretion in the performance of such Trust or in the operation of the Trust Estate; but any act or liability for any omission or obligation of the Trustees in the execution of such Trust, or in the operation of the Trust Estate, shall extend to the whole of the Trust Estate or so much thereof as may be necessary to discharge such liability or obligation.

(11) Notwithstanding any other provision of this Indenture which shall appear to provide otherwise, no Trustee or Trustee shall have the power or authority to bind or obligate any other Trustee, or the Beneficiary, in his or its capacity, nor can the Beneficiary bind or obligate the Trust or any individual Trustee.

ARTICLE VII

POWERS AND DUTIES OF THE TRUSTEES

To accomplish the purposes of the Trust, and subject to the provisions and limitations otherwise provided in this Trust Indenture, the Trustees shall have, in addition to the usual powers incident to their office and the powers granted to them in other parts of this Trust Indenture, the following rights, powers, duties, authority, or authority from any court:

(1) To finance, refinance, acquire, establish, develop, construct, enlarge, improve, extend, maintain, equip, operate, lease, furnish, provide, supply, regulate, hold, store and administer any of the facilities designated pursuant to Article III hereof as the Trustees shall determine necessary for the benefit and development of the Beneficiary;

(2) To enter into contracts for the acquisition and construction of facilities authorized to be acquired and constructed pursuant to the terms of this Trust Indenture and in compliance herewith, other than those facilities to be constructed by the employees of the Trustees;

(3) To employ such architectural and engineering firm or firms as the Trustees deem necessary to prepare such preliminary and detailed studies, plans, specifications, cost estimates and feasibility reports as are required in the opinion of the Trustees. The cost of such engineering and architectural work shall be paid out of he proceeds of the sale of bonds or from such other funds as may be available therefor.

(4) To enter into contracts for the sale of bonds, notes or other evidences of indebtedness or obligations of the Trust for the purpose of acquiring or constructing facilities authorized to be acquired or constructed pursuant to the terms of this Trust Indenture and for that purpose may:

(a) Employ a financial advisor, or committee of advisors, to advise and assist the Trustees in the marketing of such bonds, notes or other evidences o indebtedness or obligations, and to present financial plans for the financing of the acquisition or construction of each project, and to recommend to, or consult with, the Trustees, concerning the terms and provisions of bond indentures and bond issues, and may pay appropriate compensation for such work and services performed in the furtherance of the project;

(b) Sell all bonds, notes or other evidences of indebtedness or obligations of the Trust in whole or in installments or series and on such terms and conditions and in such manner as the Trustees shall deem to be in the best interest of the Trust Estate; and,

(c) Appoint and compensate attorneys, paying agencies and corporate trustees in connection with the issuance of any such bonds, notes, evidences of indebtedness or other obligations of the Trust.

(5) To enter into and execute, purchase, lease or otherwise acquire property, real, personal or mixed, contracts, leases, rights, privileges, benefits, choses in actions, or other things of value and to pay for the same in cash, with bonds or other evidences of indebtedness or otherwise.

(6) To make and change investments, to convert real into personal property, and vice versa, to lease, improve, exchange or sell, at public or private sale, upon such terms as they deem proper, and to resell, at any time and as often as they deem advisable, any or all the property in the Trust, real and personal; to borrow money, or renew loans to the Trust, to refund outstanding bonded indebtedness and to execute therefor notes, bonds or other evidences of indebtedness,and to secure the same by mortgage, lien, pledge or otherwise; to purchase property from any person, firm or corporation, and lease land and other property to and from the Beneficiary and construct, improve, repair, extend, remodel and equip facilities thereon and to operate or lease or rent the same to individuals, partnerships, associations, corporations and others, including the United States of America, or the State of Oklahoma and agencies or authorities of the United States of America, or the State of Oklahoma, or of any municipality thereof, and also including all municipal or other political subdivisions of the State of Oklahoma as well as the Beneficiary hereof, and to do all things provided for in Article III of this Trust Indenture, and procure funds necessary for such purpose by the sale of bonds or other evidences of indebtedness by a mortgage, lien, pledge or other encumbrance or otherwise of such real and personal property and facilities owned or otherwise acquired, leased or controlled by Trustees, and by rentals, income,receipts and profits therefrom, or from any other revenues associated with the ownership, operation or control of the property of the Trust; to lease or sublease any property of the Trust or of which the Trustees may become the owners or lessees.

(7) To fix, demand and collect charges, rentals and fees for the services and facilities of the Trust to the same extent as the Beneficiary might do and to discontinue furnishing of services and facilities to any person, firm or corporation, or public instrumentality, delinquent in the payment of any indebtedness to the Trust; to purchase and sell such supplies, goods and commodities as are incident to the operation of its properties.

(8) To make and perform contracts of every kind, including management contracts, with any person, firm, corporation, association, trusteeship, municipality, government or sovereignty; and without limit as to amount to draw, make, accept, endorse, assume, guarantee, account, execute and issue promissory notes, drafts, bills of exchange, acceptances, warranties, bonds, debentures and other negotiable or non-negotiable instruments, obligations and evidences of unsecured indebtedness, or of indebtedness secured by mortgage, deed of trust or otherwise upon any or all income of the Trust, in the same manner and to the same extent as a natural person might do or could do. To collect and receive any property, money, rents or income of any sort and distribute the same or any portion thereof for the furtherance of the authorized Trust purposes set out herein.

(9) To do all other acts in their judgment necessary or desirable, for the proper and advantageous management, investment and distribution of the Trust Estate and income therefrom.

The whole title, legal and equitable, to the properties of the Trust is and shall be vested in the Trustees, as such title in the Trustees is necessary for the due execution of this Trust. Said Trustees shall have and exercise exclusive management and control of the properties of the Trust Estate for the use and benefit of the Beneficiary; but may agree for approval of any or all of its actions and transactions by the governing board of the Beneficiary.

The Trustees may contract for the furnishing of any services or the performance of any duties that they may deem necessary or proper, and pay for the same as they see fit.

The Trustees may select depositories for the funds and securities of this Trust. Temporary Trustee or Trustees or Receiver appointed pursuant to paragraph 6 of Article V hereof may employ special counsel to represent themand such special counsel's compensation shall be paid from revenues of the Trust Estate.

The Trustees may compromise any debts or claims of or against the Trust Estate, and may adjust any dispute in relation to such debts or claims by arbitration or otherwise and may pay any debts or claims against the Trust Estate upon any evidence deemed by the Trustees to be sufficient. The Trustees may bring any suit or actions,which in their judgment is necessary or proper to protect interest of the Trust Estate, or to enforce any claim, demand or contract for the Trust; and they shall defend, in their discretion, any suit against the Trust, or the Trustees or employees, agents or servants thereof. They may compromise and settle any suit or action, and discharge the same out of assets of the Trust Estate, together with court costs and attorneys' fees. All such expenditures shall be treated as expenses of executing this Trust.

No purchaser at any sale or lessee under a lease made by the Trustees shall be bound to inquire into the expediency, propriety, validity or necessity of such sale or lease or to see to or be liable for the application of the purchase or rental moneys arising therefrom.

ARTICLE VIII

BENEFICIARY OF TRUST

(1) The Beneficiary of this Trust shall be the Beneficiary, under and pursuant to Title 60, Oklahoma Statutes 1971, Sections 176 to 180.3 inclusive, as amended and supplemented, and other statutes of the State of Oklahoma presently in force and effect. Trustor now declares that this Trust Indenture shall not be subject to revocation, alteration, amendment, revision,

modification or termination from and after the date any indebtedness is incurred by the Trustees.

(2) The Beneficiary shall have no legal title, claim or right to the Trust Estate, its income, or to any part thereof or to demand or require any partition or distribution thereof. Neither shall the Beneficiary have any authority, power or right, whatsoever, to do or transact any business for, or on behalf of, or binding upon the Trustees or upon the Trust Estate, nor the right to control or direct the actions of the Trustees pertaining to the Trust Estate, or any part thereof. The Beneficiary shall be entitled solely to the benefits of this Trust, as administered by the Trustees hereunder, and at the termination of the Trust, as provided herein, and then only, the Beneficiary shall receive the residue of the Trust Estate.

ARTICLE IX

TERMINATION OF TRUST

This Trust shall terminate - - -

(1) When the purposes set out in Article III of this instrument shall have been fully executed; or,

(2) In the manner provided by Title 60, Oklahoma Statutes 1971, Section 180. Provided, however, that this Trust shall not be terminated by voluntary action if there be outstanding indebtedness or fixed term obligations of the Trustees, unless owners of such indebtedness or obligations shall have consented in writing to such termination.

Upon the termination of this Trust, the Trustees shall proceed to wind up the affairs of this Trust, and after payments of all debts, expenses and obligations out of the moneys and properties of the Trust Estate to the extent thereof, shall distribute the residue of the money and properties of the Trust Estate to the Beneficiary hereunder. Upon final distribution, the powers, duties and authority of the Trustees hereunder shall cease.

ARTICLE X

The Trustees accept the Trust herein created and provided for, and agree to carry out the provisions of this Trust Indenture on their part to be performed.

IN WITNESS WHEREOF, the Trustor and the Trustees have hereunto set their hands on the day and year indicated.

/s/ Jerry Anduss Trustor

/s/ Jerry Anduss
Trustee

/s/ Virginia Simpson
Trustee

/s/ Willard Every
Trustee

STATE OF OKLAHOMA)
)SS
COUNTY OF CANADIAN)

BEFORE ME, the undersigned, a Notary Public in and for said County and State, on this 2nd day of April, 1973, personally appeared Jerry Anduss to me known to be the person who executed the within and foregoing instruments and acknowledged to me that he executed the same as his free and voluntary act and deed for the uses and purposes therein set forth.

GIVE UNDER MY HAND AND SEAL the day and year last above written.

/s/ Gary M. Bush

Notary Public

(SEAL)

My commission expires August 9, 1976.

STATE OF OKLAHOMA)
)SS
COUNTY OF CANADIAN)

BEFORE ME, the undersigned, a Notary Public in and for said County and State, on this 2nd day of April, 1973, personally appeared Jerry Anduss, Virginia Simpson and Willard Every, to me known to be the identical persons who executed the within and foregoing instrument and acknowledged to me that they executed the same as their free and voluntary act and deed for the uses and purposes therein set forth.

GIVEN UNDER MY HAND AND SEAL, the day and year last above written.

/s/ Gary M. Bush
Notary Public

(SEAL)

My commission expires August 9, 1976.

ACCEPTANCE

KNOW ALL MEN BY THESE PRESENTS:

That the Board of Trustees of the town of Piedmont of Canadian County, Oklahoma, a municipal corporation, hereby accepts the beneficial interest in the Trust created by the within and foregoing Trust Indenture, for and on behalf of said beneficiary in all respects in accordance with the terms of said Trust Indenture.

WITNESS my hand as President of the Board of Trustees of the Town of Piedmont, Oklahoma, attested by the Town Clerk of the Town of Piedmont, Oklahoma, pursuant to direction of said Board of Trustees, this 2nd day of April, 1973.

/s/ Jerry Anduss _____ President, Board of Trustees

AMENDED DECLARATION OF TRUST

OF

THE PIEDMONT MUNICIPAL AUTHORITY

Section I. Declaration and Covenant.
Section II. Name.
Section III. Purposes.
Section IV. Duration.
Section V, Trust Estate.
Section VI. The Trustees.
Section VII. Powers and Duties of Trustees.
Section VIII. Beneficiary.
Section IX. Termination.
Section X. Partial Ineffectiveness.
Section XI. Covenant.

Ed. Note: This is the amended declaration of trust for the authority, approved May 28, 1991.

KNOW ALL MEN BY THESE PRESENTS:

SECTION I. DECLARATION AND COVENANT.

The undersigned Trustor hereby contracts with the undersigned Trustees, and the latter, as individuals an not as holders of public office, hereby do declare and covenant, between themselves and unto the Trustor, the State of Oklahoma and the Beneficiary hereinafter described, that they and their successors do and will hold, receive and administer the Trust Estate hereinafter described, as Trustees of a public trust under and pursuant to the laws of the State of Oklahoma now in force and effect (generally, but not exclusively, Sections 176 and 180, inclusive of Title 60, Oklahoma Statutes 1981, and the Oklahoma Trust Act), solely for the use and benefit of said Beneficiary for the public purposes and functions hereinafter set forth, in the manner provided in this instrument, or in the absence of applicable provision herein, then in the manner now provided by law. The aforesaid public trust is created by virtue of the execution of this instrument by the individuals signing the same as the Trustor and initial Trustees hereunder; and neither the acceptance of the beneficial interest hereunder, nor the endorsement hereon of such acceptance, for and on behalf of the designated Beneficiary as provided by law, nor the fact that, at the time of signing this instrument, some or all of the initial Trustees are members of the governing body thereof, shall be deemed or construed to be the creation of a public trust by said Beneficiary or the governing body thereof.

SECTION II. NAME.

The name of this Trust shall be, and the Trustees thereof in their representative fiduciary capacity shall be designated as,

"THE PIEDMONT MUNICIPAL AUTHORITY"

Under that name, the Trustees shall, so far as practicable, conduct all business and execute all instruments in writing, and otherwise perform their duties and functions, in execution of this Trust.

SECTION III. PURPOSES.

The purposes of this Trust, for and on behalf of the Beneficiary as hereinafter described, are:

(a) To furnish and supply to the inhabitants, owners and occupants of property, and to industrial, commercial and mercantile establishments and enterprises within the corporate limits of the Beneficiary and in territory in reasonably convenient proximity thereto, and to the Beneficiary and any other governmental agencies or endeavors,, utility services and facilities for all purposes that the same be authorized or proper as a function of the Beneficiary; and to fix, demand and collect charges, rates and fees for said services and facilities to the same extent as the Beneficiary itself might do; PROVIDED, that the furnishing of any services or facilities to any person delinquent in the payment of any indebtedness whatsoever to the Trust may be discontinued at any time;

(b) To promote the development of industry and culture and industrial, manufacturing, cultural and educational activities within and without the territorial limits of the Beneficiary and to thereby provide industrial and cultural facilities and additional employment and activities which will benefit and strengthen culture and the economy of the Beneficiary and the State of Oklahoma;

(c) For the furtherance of the grater convenience and welfare of the Beneficiary and the inhabitants thereof, to provide and/or to aid in providing and/or to participate in providing to the United States of America, the State of Oklahoma, the Beneficiary, the county or counties in which the Beneficiary is located, the school district and/or districts included in whole or in part, within the limits of the Beneficiary, and/or any agency or instrumentality of either or any of them, or to any one or more of them, facilities and/or services of any and/or all kinds necessary or convenient for the functioning thereof;

(d) To hold, maintain and administer any leasehold rights in and to properties of the Beneficiary demised to the Trustees, and to comply with the terms and conditions of any lease providing said rights;

(e) To acquire by lease, purchase or otherwise, and to hold, construct, install, equip, repair, enlarge, furnish, maintain and operate or otherwise deal with, any and all physical properties and facilities needful or convenient for utilization in executing or promoting the execution of the aforesaid trust purposes or any of them, or which may be useful in securing, developing and maintaining industry and industrial, manufacturing or other activities in the Beneficiary and territory in proximity thereto, or which may be useful in promoting culture and education in the aforesaid area; to lease, rent, furnish, provide, relinquish, sell or otherwise dispose of, or otherwise make provision for, any or all of said properties and facilities either in execution of any of the aforesaid trust purposes or in the event that any thereof shall no longer be needful for such purposes;

(f) To provide funds for the costs of financing, acquiring, constructing, installing, equipping, repairing, remodeling, improving, extending, enlarging, maintaining, operating, administering and disposing of or otherwise dealing with any of the aforesaid physical properties

and facilities, and for administering the trust for any or all of the aforesaid trust purposes, and for all other charges, costs and expenses incidental thereto; and in so doing to incur indebtedness, either unsecured or secured by any part or parts of the Trust Estate and/or revenues thereof;

(g) To expend all funds coming into the hands of the Trustees, as revenue or otherwise, in the payment of the aforesaid costs and expenses, and in the payment of any indebtedness incurred by the Trustees for the purposes specified herein, and in the payment of any other debt or obligation properly chargeable against the Trust Estate, and to distribute the residue and remainder of such funds to the Beneficiary for the payment of all or any part of the principal and/or interest of any bonded indebtedness of the Beneficiary and/or for any one or more authorized or proper purposes of the Beneficiary as shall be specified by the Trustees hereunder;

(h) Whenever the same shall be or become material, the purposes set forth in paragraphs (a), (b) and (c) of this Section shall be the primary objectives of this Trust and the provisions of paragraphs (d) to (g), inclusive, shall be deemed and construed in implementation thereof and collateral thereto.

For all purposes of this Section, the word "facilities" as used herein means real estate and all privileges, benefits and appurtenances thereto, also buildings, structures, installations, and all physical property whatsoever, and all rights, privileges and benefits appertaining or related thereto.

SECTION IV. DURATION.

This Trust shall have duration for the term of duration of the Beneficiary as hereinafter described, and until such time as the Trust's purposes shall have been fully executed and fulfilled, or until it shall be terminated as hereinafter provided.

SECTION V. TRUST ESTATE.

The Trust Estate shall consist of all money, property (real, personal and/or mixed), rights, choses in action, contracts, leases, privileges, franchises, benefits and all other things of value (whether or not above described), presently in or hereafter coming into the hands, or under the control of the Trustees pursuant to the provisions of this instrument or by virtue of the Trusteeship herein described.

SECTION VI. THE TRUSTEES.

(a) The Trustees of this Trust, except as hereinafter provided, shall, ex officio, be the same persons who currently shall be the acting members of the legally-constituted governing body of the Beneficiary without distinction as to the office held; PROVIDED:

(1) Each undersigned Trustee shall continue as such, unless temporarily replaced pursuant to (d) of this Section, until succeeded and replaced by some other person as an officer of the Beneficiary, above-designated, ex officio be a Trustee and such other person shall have qualified as a Trustee hereunder as provided in (e) of this Section;

(2) Each person who shall become such an above-designated officer of the Beneficiary shall be entitled to qualify as, and to become, a Trustee hereunder and to continue as such, unless temporarily replaced pursuant to (d) of this Section, until succeeded and replaced by some other person as such officer of the Beneficiary and such other person shall have qualified as a Trustee hereunder as provided in (e) of this Section; PROVIDED, that in the event the number

of persons constituting the governing body of the Beneficiary shall be reduced by or pursuant to applicable law, any person who shall cease to be a member of the governing body of the Beneficiary shall, forthwith, cease to be a Trustee of this Trust; and

(3) All of the legal rights, powers and duties of each Trustee shall terminate when he shall cease to be a Trustee hereunder and all of such legal rights, powers and duties shall devolve upon his successor and successors, with full right and power of the latter to do or perform any act or thing which his predecessor or any predecessor could have done or performed.

(b) Each Trustee qualifying under this instrument shall continue as such until his successor shall have qualified as provided in (e) of this Section.

(c) The determination of the fact of vacancy shall be vested exclusively in the remaining Trustee or Trustees and his or their determination of such fact shall be conclusive; and, in the event that such a vacancy shall be determined to exist, the remaining Trustee or Trustees may fill such vacancy pending qualification, as provided in (e) of this Section, of the person entitled so to do.

(d) The Trustees may contract, in connection with the incurring of any indebtedness or obligation related to the Trust Estate and/or its revenues, or any part of either or both, that Temporary Trustees, residents of the State of Oklahoma, and approved by the District Court of Canadian County, or a Judge of said court, may be appointed to act in place and instead of permanent Trustees in relation to the Trust Estate or any part thereof, in such number that such Temporary Trustees may constitute a majority of the Trustees in relation to the Trust Estate or any part thereof, in the event of a default in the performance of such obligations or the payment of the principal of and interest on any debt incurred in relation to the Trust Estate or any portion thereof or compliance with the terms of any instrument securing such debt or pursuant to which such debt be incurred. Any such contract, if made, shall provide that any such appointment shall designate the permanent Trustee to be so temporarily supplanted. Each such Temporary Trustee so appointed shall, after he shall have qualified as provided in (e) of this Section, supplant in all respects the permanent Trustee so designated in relation to the Trust Estate or that portion thereof for which he as appointed; and, during the term of any such Temporary Trustee, the permanent Trustee so supplanted shall be wholly without authority, duty or liability of any kind in relation to the Trust Estate or said portion thereof, under the terms of this instrument. All Temporary Trustees shall cease to have any power or authority upon the termination of all defaults by which their appointments would have been authorized, and, automatically, the permanent Trustees supplanted shall be reinstated.

(e) All Trustees, and all Temporary Trustees appointed hereunder, shall qualify by written acceptances of all of the terms of this instrument, filed in the office of the Clerk of the Beneficiary, and by subscribing and filing such oaths as shall be required by law of public officers of the State of Oklahoma.

(f) The acceptance of the office of Trustee of this Trust shall not constitute the Trustees hereunder, permanent or temporary, or both, to be in a partnership or association, but each shall be an individual and wholly independent Trustee only.

(g) Notwithstanding any provision of this instrument which shall appear to provide otherwise, no Trustee or Trustees shall have any power or authority to bind or obligate any other Trustee, or the Beneficiary of this Trust, in his or its individual capacity.

(h) All persons, firms, associations, trusteeships, corporations, municipalities, governments, and all agents, agencies and instrumentalities thereof, contracting with any Trustee or Trustees, permanent or temporary or both, shall take notice that all expenses and obligations, and all debts, damages, judgments, decrees or liabilities incurred by any Trustee or Trustees, permanent or temporary or both, and any of the foregoing incurred by any agent, servant or employee of any such Trustee or Trustees, in the execution of the purposes of this Trust, whether arising from contract or tort, shall be solely chargeable to, and payable out of, the Trust Estate. In no event shall any Trustee, permanent or temporary, or the Beneficiary of this Trust, be in any manner individually liable for any injury or damage to persons or property, or for breach of contract or obligation, caused by, arising from, incident to, or growing out of the execution of this Trust; nor shall they, or any of them, be liable for the acts or omissions of each other or of another such Trustee; PROVIDED, however, that the foregoing shall not apply to any willful or grossly negligent breach of trust of any said Trustee.

SECTION VII. POWERS AND DUTIES OF TRUSTEES.

Subject to, and in full compliance with, all requirements of law, applicable to this Trust or to the Trustees thereof:

(a) The Trustees, in the manner hereinafter set forth, shall do, or cause to be done, all things which are incidental, necessary, proper or convenient to carry fully into effect the purposes enumerated in Section III of this instrument, with the general authority hereby given being intended to make fully effective the power if the Trustees under this instrument; and, to effectuate said purposes, the Trustees are specifically authorized (but their general powers not limited thereby, notwithstanding any specific enumeration or description), in a lawful manner:

(a-1) To enter in and conduct and execute, apply for, purchase or otherwise acquire franchises, property (real or personal), contracts, leases, rights, privileges, benefits, choses in action, or other things of value, and to pay for the same in cash, with bonds or evidences of indebtedness, or otherwise;

(a-2) To own, hold, manage, and in any manner to convey, lease, assign, liquidate, dispose of, compromise or realize upon, any property, contract, franchise, lease, right, privilege, benefit, chose in action, or other thing of value, and to exercise any and all power necessary or convenient with respect to the same;

(a-3) To guarantee, acquire, hold, sell, transfer, assign, encumber, dispose of, and deal in, the stocks, bonds, debentures, shares or evidences of interest or indebtedness in or of any sovereignty, government, municipality, corporation, association, trusteeship, firm or individual, and to enter into and perform any lawful contract in relation thereto, and to exercise all rights, powers and privileges in relation thereto, to the same extent as a natural person might or could do; and the foregoing shall include (without limitation by reason of enumeration), the power and authority to guarantee or assume, out of distributive funds of the Trust, the payment of any part or all of the principal of and/or interest on any bonded indebtedness of the Beneficiary during any part or all of the term of any such bonded indebtedness, and to fully perform any such contract;

(a-4) To enter into, make and perform contracts of every lawful kind or character, including (but not limited to), management contracts, with any person, firm, association, corporation, trusteeship, municipality, government, or sovereignty; and, without limit as to amount, to draw, make, accept, endorse, assume, guarantee, discount, execute and issue, promissory notes, drafts, bills of exchange, acceptances, warrants, bonds, debentures, and any other negotiable or non-

negotiable or transferable or non-transferable instruments, obligations, and evidences of unsecured or secured indebtedness, and if secured by mortgage, deed of trust, or otherwise, secured by all or any part or parts of the property of the Trust, and to pledge all or any part of the income of the Trust, in the same manner and to the same extent as a natural person might or could do.

(b) The Trustees shall collect and receive all property, money, rents, and income of all kinds belonging to or due the Trust Estate, and shall use the same solely for the purposes, and the furtherance of the purposes, set forth in Section III of this instrument, and not otherwise. Without limiting the foregoing provisions of this paragraph, none of the net earnings or income derived from or accruing to the Trust Estate, nor any part of the Trust Estate, in any instance beyond that necessary to pay the principal of and interest on indebtedness incurred for purposes set forth in Section III of this instrument and to pay the costs and expenses of implementation of said purposes, shall inure to the benefit of any person or entity other than the Beneficiary.

(c) The Trustees shall take and hold title to all property at any time belonging to the Trust in the names of the Trustees or in the name of the Authority and shall have and exercise exclusively the management and control of the same, for the use and benefit of the Beneficiary, as provided herein, in the execution of the purposes of this Trust; and the right of the Trustees to manage, control and administer the said Trust, its property, assets and business shall be absolute and unconditional and free from any direction, control or management by the Beneficiary, or any person or persons whomsoever,

(d) The Trustees may employ such agents, servants and employees as they deem necessary, proper or convenient for the execution of the purposes of this Trust, and prescribe their duties and fix their compensation.

(e) The Trustees may contract for the furnishing of any services or the performance of any duties that the Trustees deem necessary, proper or convenient to the execution of the purposes of this Trust, and shall pay for the same as they see fit to provide in such a contract.

(f) The Trustees, by Resolution, may divide the duties of the Trustees hereunder, delegating all or any part of such duties to one or another of the Trustees as they deem proper; but, where a specific duty is not so delegated, a majority of the Trustees must act for the Authority.

(g) The Trustees shall, in the name of the Trust as hereinabove set forth, or in their names as Trustees, bring any suit or action, which, in their judgment, shall be necessary or proper to protect the interests of the Trust, or to enforce any claim, demand or contract for the Trust or for the benefit of the Trust; and they shall defend, in their discretion, any action or proceeding against the Trust or the Trustees or agents, servants or employees thereof. And the Trustees are expressly authorized, in their discretion, to bring, enter, prosecute,or defend any action or proceeding in which the Trust shall be interested and to compromise any such action or proceeding and discharge the same out of the Trust property and assets; and the Trustees also are expressly authorized to pay or transfer out of the Trust property or assets such money or property as shall be required to satisfy any judgment or decree rendered against them as Trustees, or against the Trust, together with all costs, including court costs, counsel and attorneys' fees, and also to pay out of the Trust property and assets such sums of money, or transfer appropriate property or assets of the Trust, for the purpose of settling, compromising, or adjusting any claim, demand, controversy, action or proceedings, together with all costs and expenses connected therewith; and all such expenditures and transfers shall be treated as proper expenses of executing the purposes of this Trust.

(h) No bond shall be required of the Trustees, or any of them, unless they shall deem the same proper and shall provide therefor by Resolution.

(i) All proceedings of the Trustees shall be taken in public meeting only, and the Trustees shall make, or cause to be made, a written record of all of their proceedings. All records of the Trust shall be subject to inspection during customary business hours as are public records of the Beneficiary.

(j) At their first meeting, the Trustees shall designate the principal office of the Trust; and they also shall designate the time and place for regular meetings of the Trustees. The time and place of regular meetings shall not be changed unless at a meeting where all incumbent Trustees are present. No notice shall be required for the holding of regular meetings of the Trustees. Special meetings may be held upon such call as shall be fixed by Resolution of the Trustees adopted at a meeting where all incumbent Trustees are present. The Trustees shall cause to be filed, in all places where this instrument is recorded, a certificate designating the principal office of the Trust and the time and place of regular meetings of the Trustees; and any changes therein shall be filed for record in like manner.

SECTION VIII. BENEFICIARY.

(a) The term "Beneficiary", as used in this instrument, shall denote the incorporated

CITY OF PIEDMONT,

State of Oklahoma and likewise shall denote any municipal entity which hereafter may succeed said incorporated City as the governing authority of the territory lying within the municipal boundaries of said incorporated City on the effective date of this instrument.

(b) The Beneficiary shall have no legal claim or right to the Trust Estate, or to any part thereof, against the Trustees or anyone holding under them; neither shall the Beneficiary, as such, have any authority, power or right whatsoever to do or transact any business whatsoever for or on behalf of, or binding upon, the Trustees or the Trust Estate; neither shall the Beneficiary have the right to control or direct the actions of the Trustees in respect of the Trust Estate, or any part thereof; nor shall the Beneficiary have any right to demand or require any partition or distribution of the Trust Estate, or any part thereof. The Beneficiary shall be entitled solely to the benefits of this Trust, as administered by the Trustees hereunder, and at the termination of the Trust, as provided herein, and then only, the Beneficiary shall receive the residue of the rust Estate. Notwithstanding anything in the aforesaid appearing to be to the contrary, no provision in this instrument and/or of the Acceptance of Beneficial Interest thereunder by the governing body of the said Beneficiary, limiting, restricting or denying any authority, power, or right of the Beneficiary of said Trust in relation to the administration thereof is intended, or shall be construed or interpreted, to effect a surrender, or to attempt to effect a surrender, of any of the sovereign governmental powers of the State of Oklahoma or of the Beneficiary; but any and all provisions of this trust instrument are intended, and shall be applied, to relate solely and only to the proprietary rights and property interests of the said beneficiary, in trust, as distinguished from its sovereign governmental powers and authority. Moreover, it further is agreed that nothing contained in this Amendment to Trust Indenture and/or in the Acceptance of Beneficial Interest thereunder shall be construed, interpreted or applied as intending to grant, or to grant to the Trustees hereunder an exclusive franchise in relation to any powers, rights or authority of the Trustees under this trust instrument.

SECTION IX. TERMINATION.

(a) This Trust shall be irrevocable by the Trustor and shall terminate:

(1) When the purposes set forth in Section III of this instrument shall have been fully executed and fulfilled; or

(2) In the event of the happening of any event or circumstance that would prevent said purposes from being executed and fulfilled and all of the Trustees and the governing body of the municipality having beneficial interest hereunder, with the approval of the Governor of the State of Oklahoma, shall agree that such event or circumstance has taken place; provided, however, that all indebtedness of the Trust shall have been paid; or

(3) In the manner provided by Title 60, Section 180, Oklahoma Statutes 1981; provided, however, that this Trust shall not be terminate be voluntary action if there by outstanding indebtedness or fixed-term obligations of the Trustees, unless all owners of such indebtedness or obligations, or someone authorized by them so to do, shall have consented in writing to such termination.

(b) Upon the termination of this Trust, the Trustees shall proceed to wind up the affairs of the Trust, and, after payment of all debts and obligations out of Trust assets, to the extent thereof, shall distribute the residue of the Trust assets to the Beneficiary hereunder as provided in Section III of this instrument. Upon final distribution as aforesaid, the powers, duties and authority of the Trustees hereunder shall cease.

SECTION X. PARTIAL INEFFECTIVENESS.

The invalidity or ineffectiveness for any reason of any one or more words, phrases, clauses, paragraphs, subsections or sections of this instrument shall not affect the remaining portions hereof so long as such remaining portions shall constitute a rational instrument. Any such invalid or ineffective portion was inserted conditionally upon its being valid and effective only; and this instrument shall be construed as though such invalid or ineffective portion had not been inserted herein.

SECTION XI. COVENANT.

The provisions hereof shall be binding upon the undersigned, their heirs, executors, administrators, and assigns. The provisions of this "Amendment to Trust Indenture of Piedmont Municipal Authority" shall supplant in all respects each and every of the provisions of the "Trust Indenture" providing for the public trust known as "Piedmont Municipal Authority" dated April 2, 1973 and recorded in the office of the County Clerk of Canadian County, Oklahoma, in Book 536 at pages 694 and following to the same extent and effect as if all of the words and figures in this instrument were included in said instrument of April 2, 1973, as of the date thereof.

IN WITNESS WHEREOF, we have hereunto set our hands, executing this Amendment to Trust Indenture in several multiple originals, all of which constitute one and the same instrument, this 28 day of May, 1991.

(Signed)

TRUSTEES

ATTEST:

/s/ Mae Cleaton
Town Clerk
(SEAL)

APPENDIX 6

CABLE TELEVISION

Ord. No. 160 as amended by Ord. No. 242, 5/27/86, sets out regulations and provisions related to cable service and selection of cable permittee in the city. Permit issued by the city council 5/27/86 grants a revocable permit to Oklahoma Cable Systems for 25 years to conduct cable service in the city. Copies are on file in the office of the city clerk.

APPENDIX 7

PROVISIONS OF SELECTED STATE STATUTES APPLICABLE TO CITY

STATE LAWS

APPENDIX

PROVISIONS OF SELECTED STATE STATUTES APPLICABLE TO THE CITY (FROM TITLE 11 OF THE OKLAHOMA STATUTES, CITIES AND TOWNS)

Article	
8	Officers - General Provisions
13	Municipal Charters
14	Municipal Ordinances
16	Municipal Elections
17	Municipal Finances
22	General Powers of Municipalities
27	Courts

ARTICLE VIII

OFFICERS - GENERAL PROVISIONS

Section

8-101	Qualifications for Elected Office
8-102	Term of Office
8-103	Oath of Office
8-104	Who may Administer Oaths
8-105	Certain Officers to Give Bond
8-106	Nepotism - Dual Office Holding
8-107	Removal of Officers
8-108	Absence from Governing Body Meetings
8-109	Vacancies in Office
8-110	Method of City Official Becoming Candidate for County or State Office
8-111	Abstinence in Voting in Certain Meetings
8-112	Resignation of Municipal Officer
8-113	Certain Officers and Employees Prohibited from Conducting Certain Business with Municipality - Violations

ARTICLE VIII

OFFICERS - GENERAL PROVISIONS

SECTION 8-101. QUALIFICATIONS FOR ELECTED OFFICE

A municipal elected official shall be a resident and a registered voter of the municipality in which he serves, and all councilmembers or trustees from wards shall be actual residents of their respective wards. If an elected official ceases to be a resident of the municipality, he shall thereupon cease to be an elected official of that municipality.

SECTION 8-102. TERM OF OFFICE

Unless otherwise provided for by law, the term of office of an elected municipal official shall be four (4) years. The term of office of an elected official shall begin at 12:00 noon on the second Monday following the general municipal election, and such official shall serve until his successor is elected and qualified. If a newly elected official does not qualify within thirty (30) days after his term of office begins, the office shall become vacant and shall be filled in the manner provided by law. In order to complete the unexpired term, the office of an official who is holding over shall be filled at the next general election in compliance with the provisions of Sections 16-101 through 16-213 of this title. (Amended 11/1/84)

SECTION 8-103. OATH OF OFFICE

Any officer, elected or appointed, before entering upon the duties of his office, shall take and subscribe to the oath or affirmation of office prescribed by the Oklahoma Constitution. The oath or affirmation shall be filed in the office of the municipal clerk.

SECTION 8-104. WHO MAY ADMINISTER OATHS

All officers authorized by state law, the mayor, the municipal clerk, the city manager, the municipal judge or judges and such other officers as the municipal governing body may authorize, may administer oaths and affirmations in any matter pertaining to the affairs and government of the municipality.

SECTION 8-105. CERTAIN OFFICERS TO GIVE BOND

The municipal governing body shall require the municipal treasurer, and any other officers and employees as the governing body may designate by ordinance, to give bond for the faithful performance of his duties within ten (10) days after his election or appointment, in such amount and form as the governing body shall prescribe. The municipality shall pay the premiums on such bonds.

SECTION 8-106. NEPOTISM - DUAL OFFICE HOLDING

No elected or appointed official or other authority of the municipal government shall appoint or elect any person related by affinity or consanguinity within the third degree to any governing body member or to himself or, in the case of a plural authority, to any one of its members to any office or position of profit in the municipal government. The provisions of this section shall not prohibit an officer or employee already in the service of the municipality from continuing in such service or from promotion therein. A person may hold more than one office or position in a municipal government as the governing body may ordain. A member of the governing body shall not receive compensation for service in any municipal office or position other than his elected office. (Amended 11/1/84)

SECTION 8-107. REMOVAL OF OFFICERS

A municipal elected official may be removed from office for any cause specified by applicable state law for the removal of officers, and by the method or methods prescribed thereby.

SECTION 8-108. ABSENCE FROM GOVERNING BODY MEETINGS

Whenever a member of the municipal governing body is absent from more than one-half of all meetings of the governing body, regular and special, held within any period of four (4) consecutive months, he shall thereupon cease to hold office.

SECTION 8-109. VACANCIES IN OFFICE

A. When a vacancy occurs in an office of an elected municipal official except the mayor, the governing body shall appoint, by a majority vote of the remaining members, a person to fill the vacancy until the next general municipal election, or the next biennial town meeting if the municipality is subject to the Oklahoma Town Meeting Act, Section 16-301 et seq. of this title, and to serve until a successor is elected and qualified. Any vacancy shall then be filled at the next general municipal election or biennial town meeting by election of a person to complete the balance of any unexpired term. If the vacancy has not been filled within sixty (60) days after it occurs, the governing body shall call for a special election or a special town meeting for the purpose of filling the vacancy for the duration of the unexpired term unless said vacancy occurs or said election would occur within one hundred twenty (120) days prior to the first day of the filing period for the next general municipal election or within one hundred twenty (120) days prior to the next biennial town meeting. If a vacancy is not filled by the special election or at a special town meeting, it shall be filled by appointment as provided for in this subsection.

B. If a majority of the offices of a governing body are become vacant more than sixty (60) days before the beginning of a regular filing period for general municipal elections or more than sixty (60) days before the biennial town meeting, the remaining members of the governing body shall call for a special election or a special town meeting, if the municipality is subject to the Oklahoma Town Meeting Act, to be held as soon as possible in the municipality for the purpose of filling all vacant offices for the remainder of their unexpired terms if the election or town meeting can be held more than sixty (60) days before the beginning of the filing period for the general election or more than sixty (60) days before the next biennial town meeting. The remaining members of the governing body may pay claims in accordance with Section 17-102 of this title and, when necessary to avoid financial loss or injury to a person or property, may take any action otherwise authorized for the governing body except the enactment of an ordinance.

C. If all the offices of the governing body become vacant, the municipal clerk or acting municipal clerk shall be the interim mayor until a member of the governing body is elected and qualified. If there is no municipal clerk or acting municipal clerk in office, the municipal treasurer shall serve as interim mayor and acting municipal clerk. If there is no municipal officer in office, the Governor may appoint a registered voter of the municipality as interim mayor and acting municipal clerk. The appointed interim mayor shall give bond for the faithful performance of his duties within ten (10) days after his appointment. The municipality shall pay the premium on the bond.

D. The interim mayor shall exercise the authority of the governing body for only those purposes set out in this section.

1. Within five (5) days of the occurrence of the last vacancy, the interim mayor shall call a special election or a special town meeting, if the municipality is subject to the provisions of the Oklahoma Town Meeting Act, for the purpose of filling the unexpired terms in accordance with subsection B of this section. If all of the offices of the governing body become vacant sixty (60) days or less before the beginning of a regular filing period for general elections or sixty (60) days or less before the next biennial town meeting, the interim mayor shall call the regular general election or the biennial town meeting, whichever is appropriate. If the interim mayor fails or refuses to call an election or town meeting, whichever is appropriate, the board of county commissioners of the county in which the municipality is located shall call the election or town meeting. The county sheriff, or his deputy, shall attend any town meeting called by the board of county commissioners and, if the interim mayor fails

to conduct the meeting, shall moderate the meeting. The interim mayor or the sheriff or deputy who is moderating the meeting is authorized to appoint a registered voter of the municipality to take the minutes of the meeting. If the vacancies are not filled by the election or town meeting called for the purpose, the Governor may appoint registered voters of the municipality to fill the vacancies without regard to wards for the balance of the unexpired term.

2. The interim mayor may pay claims in accordance with subsection C of Section 17-102 of this title. The interim mayor shall submit a list of such payments to the governing body of the municipality no later than the second regular meeting after the vacancies are filled.

E. To be eligible for appointment to fill a vacancy in an elected municipal office a person must meet the same qualifications required for filing a declaration for candidacy for that office. (Amended 1989)

SECTION 8-110. METHOD OF CITY OFFICIAL BECOMING CANDIDATE FOR COUNTY OR STATE OFFICE

Any member of a city governing body, the city clerk, and the city marshal, may not, unless he resigns from the office held by him, be eligible to become a candidate for a county or state office. This provision shall not apply to any municipality governed by charter, nor to incorporated towns.

SECTION 8-111. ABSTINENCE IN VOTING IN CERTAIN MEETINGS

If a member of the governing body of a municipality abstains from voting, he shall be deemed to have cast a negative vote, which shall be recorded in the minutes. (Added, 11/1/84)

SECTION 8-112. RESIGNATION OF MUNICIPAL OFFICER

A municipal officer may resign by submitting his written resignation to the governing body of the municipality, to the remaining members of the municipal governing body if some positions are vacant, to the interim mayor or, if all positions of the governing body will become vacant upon the resignation, to the board of county commissioners of the county in which the municipality is located. Delivery of the written resignation to the governing body during a public meeting of such body or to the municipal clerk by mail or personal delivery during regular office hours shall constitute submission of the resignation to the municipal governing body. Delivery of the written resignation to the board of county commissioners during a public meeting of the commissioners or to the county clerk by mail or hand delivery during regular office hours shall constitute submission of the resignation to the board of county commissioners. A resignation submitted by a municipal officer may be withdrawn in writing at any time prior to the effective date stated in the resignation. If no effective date is stated, the resignation shall be effective immediately. Acceptance by the governing body shall not be required for the resignation to be effective. (Amended 1988)

SECTION 8-113. CERTAIN OFFICERS AND EMPLOYEES PROHIBITED FROM CONDUCTING CERTAIN BUSINESS WITH MUNICIPALITY - VIOLATIONS

A. Except as otherwise provided by this section, no municipal officer or employee, or any business in which said officer, employee, or spouse of the officer or employee has a proprietary interest, shall engage in:

1. Selling, buying, or leasing property, real or personal, to or from the municipality;

2. Contracting with the municipality; or

3. Buying or bartering for or otherwise engaging in any manner in the acquisition of any bonds, warrants, or other evidence of indebtedness of the municipality.

B. For purposes of this section, "employee" means any person who is employed by a municipality more than ten (10) hours in a week for more than thirteen (13) consecutive weeks and who enters into, recommends or participates in the decision to enter into any transaction described in subsection A of this section. Provided that any person who receives wages, reimbursement for expenses, or emoluments of any kind from a municipality, any spouse of such person, or any business in which such person or spouse has a proprietary interest shall not buy or otherwise become interested in the transfer of any surplus property of a municipality or a public trust of which the municipality is beneficiary unless such surplus property is offered for sale to the public after notice of the sale is published.

C. For purposes of this section, "proprietary interest" means ownership of more than twenty-five percent (25%) of the business or of the stock therein or any percentage which constitutes a controlling interest but shall not include any such interest held by a blind trust.

D. Any person convicted of violating the provisions of this section shall be guilty of a misdemeanor. Any transaction entered into in violation of the provisions of this section is void. Any member of a governing body who approves any transaction in violation of the provisions of this section shall be held personally liable for the amount of said transaction. (Amended 3/5/85)

ARTICLE XIII

MUNICIPAL CHARTERS

Section	
13-101	Municipalities May Adopt Charter
13-102	Procedure for Adopting Charters - Petition or Governing Body Resolution
13-103	Election on Question and Board of Freeholders
13-104	Canvassing Returns - Certification of Results
13-105	Preparation of Charter
13-106	Notice of Charter Election
13-107	Charter Election - Certification of Results - Approval by Governor
13-108	Deposit of Copies for Record - Judicial Notice
13-109	Charter Controls over Conflicting Laws
13-110	Payment of Expenses for Framing and Adopting Charter
13-111	Charter Amendments - Procedure
13-112	Revocation or Abolishment of Charter - Adopting Statutory Form - Procedure
13-113	Charter Revocation - Canvassing Returns - Proclamation of Governor - Election of Officers
13-114	Special Charter Provisions Relating to Abandonment of Municipal Charters

ARTICLE XIII

MUNICIPAL CHARTERS

SECTION 13-101. MUNICIPALITIES MAY ADOPT CHARTER

Any city or town containing a population of two thousand (2,000) inhabitants or more, as shown by the latest federal census or other census recognized by the laws of Oklahoma, may frame a charter for its own government.

SECTION 13-102. PROCEDURE FOR ADOPTING CHARTERS - PETITION OR GOVERNING BODY RESOLUTION

The mayor of an incorporated municipality shall issue an order calling for an election on the question of whether or not the municipality shall frame a charter for its own government and elect a board of freeholders to prepare the charter when:

1. A petition signed by not less then twenty-five percent (25%) of the registered voters of the municipality, as shown by the preceding general election, is filed with the governing body; or

2. The governing body, by resolution, so directs.

The order calling for the election shall be issued within ten (10) days after a petition has been filed with the governing body or within ten (10) days after the date of the governing body resolution.

SECTION 13-103. ELECTION ON QUESTION AND BOARD OF FREEHOLDERS

The election on the question and board of freeholders shall be held at a general or special election to be held in the municipality within thirty (30) days after the order calling for the election. Notice of the election shall be given in the manner required for municipal elections. The question submitted to the registered voters of the municipality shall be substantially in the following form:

Shall the _____ (City or Town) of _____ frame a charter for its own government?

( ) Yes.
( ) No.

The board of freeholders, which is to be voted on in the same election, shall consist of two qualified electors from each ward in the municipality. The freeholders shall be elected by the registered voters of the respective wards. The two candidates receiving the highest number of votes in each ward shall be elected as members of the board of freeholders. The ballot shall be substantially in the following form:

For Freeholder from Ward One
(Vote for Two)

_____Name of candidate for freeholder

_____Name of candidate for freeholder.

SECTION 13-104. CANVASSING RETURNS - CERTIFICATION OF RESULTS

The county election board shall canvass the returns and the secretary of the board shall, within five (5) days after the canvass of the returns of the election, certify the results to the municipal governing body. If a majority of the votes cast on the question are in favor of framing a charter for the municipality, the board shall tabulate the votes on the election of freeholders and declare the results in the certification to the governing body.

SECTION 13-105. PREPARATION OF CHARTER

The board of freeholders shall prepare a charter for the municipality within ninety (90) days after their election. The charter shall be consistent with and subject to the Oklahoma Constitution and shall not be in conflict with the Constitution and laws relating to the exercise of initiative and referendum. The proposed charter shall be signed in duplicate by at least a majority of the freeholders. One copy of the proposed charter shall be given to the mayor and the other shall be given to the county clerk of the county in which the situs of the municipality is located.

SECTION 13-106. NOTICE OF CHARTER ELECTION

Within twenty (20) days after receipt of the proposed charter from the board of freeholders, the governing body shall publish the proposed charter and an announcement of the date for the charter election in a newspaper of general circulation within the municipality for at least twenty-one (21) days, if in a daily paper, or in three (3) consecutive issues, if in a weekly paper. The date for the charter election shall not be less than twenty (20) days nor more than thirty (30) days after the last publication.

SECTION 13-107. CHARTER ELECTION - CERTIFICATION OF RESULTS - APPROVAL BY GOVERNOR

The question of whether or not the municipality shall adopt the proposed charter shall be submitted to the registered voters of the municipality at a general or special election. If a majority of the votes cast, as certified by the secretary of the county election board, are in favor of adopting the charter, the charter shall then be certified by the mayor of the municipality and authenticated by the seal of the municipality. The submission to and approval by the registered voters shall be set forth on the charter. The charter shall then be submitted to the Governor for his approval, and the Governor shall approve the charter if it is not in conflict with the Constitution and laws of Oklahoma. Upon his approval, the charter shall become the organic law of the municipality and supersede any existing charter and all ordinances in conflict with it.

SECTION 13-108. DEPOSIT OF COPIES FOR RECORD - JUDICIAL NOTICE

After the approval of the charter by the Governor, duplicate copies shall be made and one shall be deposited in the office of the Secretary of State, and the other, after being recorded in the office of the county clerk of the county in which the situs of the municipality is located, shall be deposited in the archives of the municipality. Thereafter the charter shall be judicially noticed in all court proceedings.

SECTION 13-109. CHARTER CONTROLS OVER CONFLICTING LAWS

Whenever a charter is in conflict with any law relating to municipalities in force at the time of the adoption and approval of the charter, the provisions of the charter shall prevail and shall operate as a repeal or suspension of the state law or laws to the extent of any conflict.

SECTION 13-110. PAYMENT OF EXPENSES FOR FRAMING AND ADOPTING CHARTER

All charter election expenses shall be paid by the municipality. The municipality may provide for the payment of the expenses incurred by the board of freeholders in the framing of the charter.

SECTION 13-111. CHARTER AMENDMENTS - PROCEDURE

Amendments to a municipal charter may be proposed by:

1. An initiative petition, signed by a number of the registered voters residing in the municipality equal to at least twenty-five percent (25%) of the total number of votes cast at the preceding general election. Charter amendments proposed by initiative petition shall be governed in all respects by the provisions of Sections 15-101 through 15-110 of this title; or

2. A resolution of the municipal governing body. Notice of charter amendments proposed by resolution and the election on them shall be in the same manner provided for adoption of municipal charters as set forth in Section 13-106 and 13-107 of this title. If a majority of the votes cast in the election on the charter amendments, as certified by the secretary of the county election board, are in favor of adopting the proposed amendments to the charter, the charter shall be so amended, certified and authenticated by the mayor, and submitted to the Governor for his approval. The Governor shall approve the charter amendments if they are not in conflict with the Constitution and laws of Oklahoma. Upon his approval, the charter as amended shall become the organic law of the municipality and supersede any existing charter and all ordinances in conflict with it. The charter amendments shall be filed and recorded in the same manner provided for filing of municipal charters.

SECTION 13-112. REVOCATION OR ABOLISHMENT OF CHARTER - ADOPTING STATUTORY FORM - PROCEDURE

A proposal to revoke or abolish the charter of a municipality shall be made in the same manner provided for charter amendments and shall include the proposed statutory form of municipal government to be adopted when the charter is revoked, unless the proposal includes the adoption of a new charter in lieu of the existing charter. The question to be submitted to the registered voters of the municipality shall be substantially in the following form:

> Shall the (City or Town) of _____ revoke the charter under which it is now operating, and adopt and be governed under the statutory _____ (name of proposed statutory form) form of municipal government as provided by laws of Oklahoma?
>
> ( ) Yes.
> ( ) No.

SECTION 13-113. CHARTER REVOCATION - CANVASSING RETURNS - PROCLAMATION OF GOVERNOR - ELECTION OF OFFICERS

The secretary of the county election board shall, within five (5) days after the canvass of the returns of the election, certify to the Governor the results of the vote on the question. If a majority of the votes cast are in favor of revoking the charter, the Governor, within twenty (20) days after receiving the certification, shall issue a proclamation stating that the municipality has revoked its charter and adopted the statutory form of municipal government specified in the question. The proclamation of the Governor shall also direct the governing body of the municipality to divide the municipality into the number of wards required and to hold primary and general elections in the manner provided by the statutory form of government which has been adopted. From the date of the Governor's proclamation, the charter of the municipality shall be revoked, and the municipality shall be governed under the laws relating to the statutory form of government which the municipality has adopted.

SECTION 13-114. SPECIAL CHARTER PROVISIONS RELATING TO ABANDONMENT OF MUNICIPAL CHARTERS

Where a municipality has adopted a charter containing a special provision to the effect that at the expiration of a specified period after the adoption of the charter the governing body may submit to the registered voters of the municipality the question of whether or not the charter shall be abandoned and the municipality governed under a statutory form of government, and the specified time has expired and the governing body has failed to submit the question, then the question shall be submitted to the registered voters at the next election which may be held in the municipality. The secretary of the county election board shall submit the question substantially in the language of the charter provision. If a majority of the votes cast, as certified by the secretary of the county election board, are in favor of abandoning the charter and adopting a statutory form, the results of the election shall be certified to the Governor in the manner provided for revocation of charters.

ARTICLE XIV

MUNICIPAL ORDINANCES

Section

14-101	Municipal Ordinances - Authority
14-101.1	Rent Control - Prohibition
14-102	Ordinances - Procedure Governing Passage
14-103	Effective Date of Municipal Ordinances - Emergency Measures
14-104	Style of Ordinances - Title and Subject - Enacting Clause
14-105	Ordinance Book - Entries
14-106	Publication of Ordinances
14-107	Publication by Title and Condensed Summary of Certain Codes and Ordinances; Adoption and Enforcement of Certain Building Codes
14-108	Codification of Municipal Ordinances
14-109	Mandatory Compilation of Penal Ordinances
14-110	Notice and Filing of Penal Ordinance Compilations - Judicial Notice
14-111	Enforcement and Penalties for Violation of Municipal Ordinances
14-112	Cancellation or Denial of Driving Privileges for Noncompliance with Municipal Court Sentence
14-113	Liability for Cost of Medical Care to Defendant in Custody of Municipal Jail

ARTICLE XIV

MUNICIPAL ORDINANCES

SECTION 14-101. MUNICIPAL ORDINANCES - AUTHORITY

The municipal governing body may enact ordinances, rules and regulations not inconsistent with the Constitution and laws of Oklahoma for any purpose mentioned in Title 11 of the Oklahoma Statutes or for carrying out their municipal functions. Municipal ordinances, rules or regulations may be repealed, altered or amended as the governing body ordains.

SECTION 14-101.1 RENT CONTROL - PROHIBITION

A. No municipal governing body may enact, maintain, or enforce any ordinance or resolution which regulates the amount of rent to be charged for privately owned, single-family or multiple unit residential or commercial rental property.

B. This section shall not be construed to prohibit any municipality or any authority created by a municipality for that purpose from:

1. Regulating in any way property belonging to that municipality or authority;

2. Entering into agreements with private persons which regulate the amount of rent charged for subsidized rental properties; or

3. Enacting ordinances or resolutions restricting rent for properties assisted with federal Community Development Block Grant Funds. (Added 1988)

SECTION 14-102. ORDINANCES - PROCEDURE GOVERNING PASSAGE

All proposed ordinances of a municipality shall be considered at a public meeting of the council or board of trustees. A vote of a majority of all the members of the council or board of trustees shall be required for the final passage of an ordinance.

SECTION 14-103. EFFECTIVE DATE OF MUNICIPAL ORDINANCES - EMERGENCY MEASURES

Every ordinance except an emergency ordinance shall go into effect thirty (30) days after its final passage unless it specifies a later date. An emergency measure necessary for the immediate preservation of peace, health, or safety shall go into effect upon its final passage unless it specifies a later date. Such an emergency measure must state in a separate section the reasons why it is necessary that the measure become effective immediately. The question of emergency must be ruled upon separately and approved by the affirmative vote of at least three-fourths (3/4) of all the members of the governing body of the municipality. (Amended 11/1/84)

SECTION 14-104. STYLE OF ORDINANCES - TITLE AND SUBJECT - ENACTING CLAUSE

An ordinance may contain only one subject and the subject shall be expressed in its title. The enacting clause of all ordinances passed by a municipal governing body shall be:

1. "Be it ordained by the Council of the City of _____", for city ordinances; or

2. "Be it ordained by the Board of Trustees of the Town of _____", for town ordinances.

The enacting clause of ordinances proposed by the voters under their power of initiative shall be "Be it ordained by the People of the _____ (City or Town) of _____".

SECTION 14-105. ORDINANCE BOOK - ENTRIES

Every ordinance enacted by a municipal governing body shall be entered in an ordinance book immediately after its passage. The entry shall contain the text of the ordinance and shall state the date of its passage, the page of the journal containing the record of the final vote on its passage, the name of the newspaper in which the ordinance was published, and the date of the publication. Compilations or codes of municipal law or regulations need not be enrolled in full in the book of ordinances, but the ordinance adopting by reference or enacting such compilation or code shall be entered and a copy of the compilation or code shall be filed and kept in the office of the municipal clerk. (Amended 11/1/84)

SECTION 14-106. PUBLICATION OF ORDINANCES

No ordinance having any subject other than the appropriation of monies shall be in force unless published or posted within fifteen (15) days after its passage. Every municipal ordinance shall be published at least once in full, except as provided in Section 14-107 of this title.

When publishing the ordinance, the publisher or managing officer of the newspaper shall prefix to the ordinance a line in brackets stating the date of publication as "Published _____", giving the month, day, and year of publication. (Amended 11/1/84)

SECTION 14-107. PUBLICATION BY TITLE AND CONDENSED SUMMARY OF CERTAIN CODES AND ORDINANCES; ADOPTION AND ENFORCEMENT OF CERTAIN BUILDING CODES

A. If a municipal governing body enacts or adopts by reference ordinances which are compilations or codes of law or regulations relating to traffic, building, plumbing, electrical installations, fire prevention, inflammable liquids, milk and milk products, protection of the public health, or other matters which the municipality has the power to regulate, such ordinances are not required to be published in full. Legal publication of these ordinances may be by publishing the title and a condensed gist or summary of their contents in the manner provided by Section 14-106 of this title. At least one copy of these ordinances shall be kept in the office of the municipal clerk for public use, inspection, and examination. The municipal clerk shall keep copies of the ordinances, code, or compilations for distribution or sale at a reasonable price.

B. A municipality which adopts building standards shall adopt and enforce one of the following codes:

1. The BOCA Basic Building Code of the Building Officials and Code Administrators International, Incorporated; or

2. The Uniform Building Code of the International Conference of Building Officials; or

3. The Southern Standard Building Code of the Southern Building Code Congress, International, Incorporated; or

4. The Code for Energy Conservation in New Building Construction prepared by the National Conference of States on Building Codes and Standards, Inc. (NCSBCS); or

5. Any other code which the governing body deems desirable to promote safety, energy efficiency, health, and welfare within the municipality.

C. Ordinances which are passed by the governing body with an emergency clause attached are not required to be published in full, but may be published by title only in the manner provided by Section 14-106 of this title. (Amended, effective 11/1/84)

SECTION 14-108. CODIFICATION OF MUNICIPAL ORDINANCES

A. The governing body of a municipality may, from time to time, authorize a codification of its ordinances. Such a code may be kept up to date by use of a loose-leaf system and process of amendment. In a code

of municipal ordinances, the title, enacting clauses and emergency sections may be omitted and temporary and special ordinances and parts of ordinances may also be omitted. Permanent and general ordinances and parts of ordinances which are to be repealed by the code shall be omitted from the code. The ordinances and parts of ordinances included in the code may be revised, rearranged, renumbered, and reorganized into some systematic arrangement. The governing body may publish in connection with the code new matter, provisions of state law relating to the municipality, a history of the municipality, the history of the municipal government, the names of officials and other informational matter as the governing body may decide. The book or pamphlet containing the code may also contain an index and forms and instructions as the governing body may decide.

B. At least three copies of the code shall be kept in the office of the municipal clerk for public use, inspection and examination. The municipal clerk shall keep copies of the code for distribution or sale at a reasonable price.

C. Notice of the publication of the code shall be in the manner provided for publication by title of certain codes and ordinances in subsection A of Section 14-107 of this title.

SECTION 14-109. MANDATORY COMPILATION OF PENAL ORDINANCES

The penal ordinances of every municipality shall be compiled and published in a permanent form, either printed or typed, periodically, but not less than once each ten (10) years. Each municipality shall also publish biennial supplements to the permanent volume of compiled penal ordinances. No municipal ordinance shall be enforced if it is not reflected in such a permanent volume or supplement if the ordinance was adopted before the latest compilation or supplement. A codification of municipal ordinances which includes all penal ordinances is sufficient for complying with this compilation requirement if the code is issued as a permanent volume with biennial supplements and if the procedures for filing and notice, as outlined in Section 14-110 of this title, have been complied with. Provided, further, the ten-year codification requirement shall be satisfied if the code complies with the compilation requirement and the biennial supplements are made a part of the permanent volume which are maintained in permanent form either bound or in a loose-leaf form. (Amended 1989)

SECTION 14-110. NOTICE AND FILING OF PENAL ORDINANCE COMPILATIONS - JUDICIAL NOTICE

When a municipality has compiled and published its permanent volume or biennial supplement of penal ordinances, the governing body of the municipality shall adopt a resolution notifying the public of the publication. A copy of the resolution shall be filed in the office of the county clerk in each county in which the municipality is located. The county clerk shall assign the filed resolution a book and page number. At least one copy of the permanent volume and each biennial supplement shall be deposited free of cost by the municipality in the county law library of each county wherein the municipality is located, and receipt of same shall be duly noted in writing by the county librarian. A copy of the receipt may be filed with the county clerk who shall then assign a book and page number. The permanent volume or biennial supplement of compiled penal ordinances shall be available for purchase by the public at a reasonable price. Ordinances which have been compiled and filed in accordance with this section shall be judicially noticed in all court proceedings. Provided, a court may consider a book and page reference of the county clerk's filings as satisfactory proof of compliance so that judicial notice may be taken of an ordinance. (Amended 1989)

SECTION 14-111. ENFORCEMENT AND PENALTIES FOR VIOLATION OF MUNICIPAL ORDINANCES

A. The governing body of a municipality may provide for enforcement of its ordinances and establish fines, penalties, or imprisonment, as authorized by subsections B through D of this section, for any offense in violation of its ordinances, which shall be recoverable with costs of suit. The governing body may provide that any person fined for violation of a municipal ordinance, who is financially able but refuses or neglects to pay the fine or costs, may be compelled to satisfy the amount owed by working on the streets, alleys, avenues, areas, and public grounds of the municipality, subject to the direction of the street commissioner or other proper officer, at a rate per day as the governing body may prescribe by ordinance, but not less than Five Dollars ($5.00) per day for useful labor, until the fine or costs are satisfied.

B. Cities having a municipal criminal court of record may enact ordinances prescribing maximum fines of Five Hundred Dollars ($500.00) and costs or imprisonment not exceeding ninety (90) days or both the fine and imprisonment, but shall not have authority to enact any ordinance making unlawful an act or omission declared by state statute to be punishable as a felony. Provided, that cities having a municipal criminal court of record may enact ordinances prescribing maximum fines of One Thousand Dollars ($1,000.00) and costs or imprisonment not exceeding ninety (90) days or both such fine and imprisonment for violations of municipal ordinances regulating the pretreatment of wastewater and regulating stormwater discharges.

C. Municipalities having a municipal court not of record may enact ordinances prescribing maximum fines of Two Hundred Dollars ($200.00) and costs pursuant to the provisions of Section 27-126 of this title or imprisonment not exceeding thirty (30) days or both the fine and imprisonment, provided that municipalities having only a municipal court not of record shall not have authority to enact any ordinance making unlawful any act or omission declared by state statute to be punishable as a felony. A municipal ordinance may not impose a penalty,

including fine and costs, greater than that established by statute for the same offense. Provided, that municipalities having a municipal court not of record may enact ordinance prescribing maximum fines of One Thousand Dollars ($1,000.00) and costs or imprisonment not exceeding ninety (90) days or both such fine and imprisonment for violations of municipal ordinances regulating the pretreatment of wastewater and regulating stormwater discharges.

D. Municipalities having both municipal criminal courts of record and municipal courts not of record may enact ordinances, within the authority of this section, for both such courts.

E. No municipality may levy a fine of over Fifty Dollars ($50.00) until it has compiled and published its penal ordinances as required in Sections 14-109 and 14-110 of this title. (Amended 1990)

SECTION 14-112 CANCELLATION OR DENIAL OF DRIVING PRIVILEGES FOR NONCOMPLIANCE WITH MUNICIPAL COURT SENTENCE.

A. As used in this section:

1. "Department" means the Department of Public Safety;

2. "Notification form" means a form prescribed by the Department which contains a statement from the court that the person has failed to satisfy the sentence of the court. It shall include the name, date of birth, physical description, and the driver's license number, if any, of the person;

3. "Reinstatement form" means a form prescribed by the Department which contains a statement from the court that the person has satisfied the sentence of the court. It shall include sufficient information to identify the person to the Department;

4. "Sentence" means any order of the court to pay a fine, penalty assessment or costs or to carry out a term of community service or other remedial action.

B. When any person under the age of eighteen (18) years fails or refuses to satisfy a sentence of a municipal court, the court shall notify the Department. Upon receipt of the notification form from the court, the Department shall cancel or deny all driving privileges of the person without a hearing until the person satisfies the sentence of the court.

C. When the person fulfills the sentence of the court, the court or court clerk shall provide a reinstatement form to such person either directly or by first class mail, postage prepaid, at the last address given by the person to the court. The driving privileges of a person who furnishes a reinstatement form to the Department shall be granted or reinstated, if the person is otherwise eligible, in accordance with law. Upon such granting or reinstatement of driving privileges, the Department may remove any record of the denial or cancellation of driving privileges as provided for in this section from the file of the person and maintain an internal record of the denial or cancellation for fiscal or other purposes.

D. At the time of sentencing the person, the court may take custody of the driver's license of the person until the terms of the sentence are fulfilled. In such case, the court shall issue to the person a receipt for the license. Additionally, the court may notify the parents or other custodian of the person of the terms of the sentence or any notice to the Department. (Added 1990)

SECTION 14-113 LIABILITY FOR COST OF MEDICAL CARE TO DEFENDANT IN CUSTODY OF MUNICIPAL JAIL.

When a defendant is in the custody of a municipal jail, the custodial municipality shall only be liable for the cost of medical care for conditions that are not preexisting prior to arrest and that arise due to acts or omissions of the municipality. Preexisting conditions are defined as those illnesses beginning or injuries sustained outside the custody of the municipal jail.

An inmate receiving medical care for a preexisting condition or a condition not caused by the acts or omissions of the municipality shall be liable for payment of the cost of care, including but not limited to, medication, medical treatment, and transportation costs, for or relating to the condition requiring treatment. (Added 1990)

ARTICLE XVI

MUNICIPAL ELECTIONS

Part 1. General Provisions

Section	
16-101	Notice of Municipal Elections
16-102	Provisions not Applicable to Municipalities Governed by Charter
16-103	General Municipal Elections - When Held
16-103.1	Withholding Certain Monies from City or Town that Fails to Hold Municipal Elections
16-104	Conduct of General Municipal Elections
16-105	What Candidate's Name may be Placed on General Election Ballot
16-105.1	Elections to be Nonpartisan - Primary Elections in Nonpartisan Elections Abolished
16-106	Unopposed Candidates in General Election
16-107	Primary Elections - When Held
16-108	Conduct of Primary Elections
16-109	Manner of Becoming a Party Candidate - Declaration of Candidacy
16-110	Independent Candidates
16-111	Unopposed Candidates in Primary Election
16-112	Special Elections - Questions Which may be Submitted
16-113	Special Election Ballot - Preparation and Arrangement
16-114	Conduct of Special Elections Held for Electing Officers

Part 2. Specific Provisions for Statutory Cities and Towns

16-201	Aldermanic Cities with One Councilmember per Ward - Officers to be Elected - Terms
16-202	First Election Held in Aldermanic Cities with One Councilmember per Ward
16-203	Aldermanic Cities with Two Councilmembers per Ward - Officers to be Elected - Terms
16-204	First Election Held in Aldermanic Cities with Two Councilmembers per Ward
16-205	Towns - Officers to be Elected - Terms
16-206	First Election Held in Town
16-207	Aldermanic Cities and Towns - Appointment of Certain Officials after Submission to Vote
16-208	Council-Manager Cities - Officers to be Elected - Terms
16-209	First Election Held in Council-Manager City
16-210	Strong-Mayor-Council Cities - Officers to be Elected - Terms
16-211	First Election Held in Strong-Mayor-Council City
16-212	Council-Manager and Strong-Mayor-Council Cities - Form of General Municipal Election Ballot
16-213	Transitional Provisions for Municipalities not in Conformance with General Election Procedure

Part 3. Town Meeting Act

16-301	Short Title
16-302	Municipalities Required to Hold Town Meetings - Election - Ordinance Providing Alternative Procedure - Repeal of Ordinance
16-303	Time for Town Meeting - Purpose - Special Town Meetings
16-304	Notice - Publication - Posting - Contents
16-305	Special Town Meeting - Meeting Called by Board of County Commissioners
16-306	Presiding Officer - Rules of Order, Conduct and Decorum - Minutes - Ballots - Nomination and Election of Officials - False Affidavits
16-307	Voting Eligibility - Poll book - Illegal Voting - Penalty
16-308	Election of Municipal Officers
16-309	Filing of List of Municipal Officers Elected - Notification of Changes in List
16-310	Contest of Election by Nominee
16-311	Petition Alleging Fraud - Bond - Hearing - Answer - Judgment - Ineligibility for Office - Liability of Contestant - Damages
16-312	Petition Alleging Irregularities Other than Fraud - Sufficiency of Allegations - Hearing
16-313	Impossibility of Determining Winner - Special Town Meeting to Fill Contested Office
16-314	Omission of or Noncompliance with Notice Requirements - Correction - Rectification of Other Errors and Omissions - Validation of Business of Original Action
16-315	Elections Conducted by County Election Board - Option to be Held at Town Meeting

ARTICLE XVI

MUNICIPAL ELECTIONS

PART I. GENERAL PROVISIONS

SECTION 16-101. NOTICE OF MUNICIPAL ELECTIONS

Notice of a general municipal election or a special election shall be given by publishing the resolution of the municipal governing body calling for the election. The resolution shall set forth:

1. The date or dates of the election; and

2. The offices to be filled or the questions to be voted upon at the election.

The resolution shall be published in a newspaper of general circulation in the municipality at least ten (10) days before the beginning of the filing period for a general municipal election, or at least ten (10) days before the date of a special election. If there is no newspaper of general circulation in the municipality, the notice shall be given by posting a copy of the resolution in at least five (5) public places in the municipality.

SECTION 16-102. PROVISIONS NOT APPLICABLE TO MUNICIPALITIES GOVERNED BY CHARTER

A. The provisions of Section 16-101 et seq. of this title shall not apply to any municipality which is governed by charter; provided, that in any election such a municipality may, by indicating in its resolution calling the election, choose to follow any provision of state law governing elections conducted by a county election board when the municipality's charter or ordinances are silent on the matter addressed by such provision. In such instance, if the municipal election or any substantial portion thereof is not conducted by a county election board, the duties required of the county election board or its secretary shall be performed by the municipal authority designated by the municipal governing body and nothing herein shall be construed to require the county election board to perform any such duties. The residency requirements of Sections 16-109 and 16-110 of this title shall apply to all municipalities except to the extent that such residency requirements are governed by municipal charter.

B. The provisions of Sections 16-101 through 16-114 of this title shall not apply to any municipality subject to the provisions of the Oklahoma Town Meeting Act; provided, Section 16-103.1 of this title shall apply to such municipalities. (Amended 1988)

SECTION 16-103. GENERAL MUNICIPAL ELECTIONS - WHEN HELD

General municipal elections shall be held in cities and towns on the first Tuesday in April in each odd-numbered year.

SECTION 16-103.1 WITHHOLDING CERTAIN MONIES FROM CITY OR TOWN THAT FAILS TO HOLD MUNICIPAL ELECTIONS

No monies shall be distributed pursuant to Section 1104 Title 47 and Section 504 of Title 68 of the Oklahoma Statutes to any incorporated city or town which has failed to hold a general municipal election or a biennial town meeting as provided in Section 16-101 et seq. of this title or the Oklahoma Town Meeting Act, respectively, on the dates required by law for two consecutive general municipal elections or biennial town meetings. Such monies shall be remitted to the county in which the incorporated city or town is located and deposited to the county highway fund of that county to be used as otherwise provided by law. An incorporated city or town shall henceforth send the county treasurer of the county in which it is located and the chairman of the Oklahoma Tax Commission, or a person designated by the Oklahoma Tax Commission to receive service of process, a copy of the municipality's notice of a biennial town meeting or resolution calling for its regular municipal elections, whichever is appropriate. The copy of the resolution shall include a notation by the county election board showing that the resolution was received and the date it was received. (Amended 1988)

SECTION 16-104. CONDUCT OF GENERAL MUNICIPAL ELECTIONS

The laws applicable to general elections shall govern general municipal elections except as otherwise provided. Municipal elected officials, including those from wards as well as at large, shall be elected at large by the registered voters of the entire municipality.

SECTION 16-105. WHAT CANDIDATE'S NAME MAY BE PLACED ON GENERAL ELECTION BALLOT

No candidate's name shall be printed upon the official ballot for a general municipal election unless such candidate shall have been nominated by some political party at the primary election or unless his name is presented as an independent candidate as provided in Section 16-110 of this title.

SECTION 16-105.1 ELECTIONS TO BE NONPARTISAN - PRIMARY ELECTIONS IN NONPARTISAN ELECTIONS ABOLISHED

Municipal elections shall be nonpartisan and all candidates shall file as independent candidates unless, prior to the date for notifying the county election board of the call for the election, the municipality has in effect an ordinance providing for a partisan primary election consistent with Section 16-101 et seq. of Title 11 of the Oklahoma Statutes. No primary elections shall be held in a nonpartisan election. Any election proclamation or notice of election providing for a primary election shall be deemed to be amended by operation of this act to delete the call for a primary election unless a copy of the ordinance authorizing the primary election is attached to the election resolution filed with the county election board. If such a copy is not attached, each candidate shall appear on the ballot as an independent candidate without party or other designation. Provided, any municipality which is governed by a charter may provide otherwise by charter or ordinance.

SECTION 16-106. UNOPPOSED CANDIDATES IN GENERAL ELECTION

Any candidate who is unopposed for an office in a general municipal election shall be deemed elected and certified; and his name shall not appear on the general election ballot. If there is only one candidate for each of the offices which are to be filled at the election, and no questions are to be voted upon at the election, the general municipal election shall not be held.

SECTION 16-107. PRIMARY ELECTIONS - WHEN HELD

A primary election shall be held in cities and towns on the first Tuesday of March in each odd-numbered year, at which time the several political parties shall nominate candidates for offices which are to be elected at the upcoming general municipal election. (Amended eff. 10/19/81).

SECTION 16-108. CONDUCT OF PRIMARY ELECTIONS

The general laws relating to primary elections shall govern municipal primaries except as otherwise provided. Party candidates for municipal office, including those from wards as well as at large, shall be nominated at large by the registered voters of the respective parties of the entire municipality.

SECTION 16-109. MANNER OF BECOMING A PARTY CANDIDATE - DECLARATION OF CANDIDACY

To be eligible to become a candidate for a political party nomination in the municipality's primary election, a person must for at least six (6) months prior to filing a declaration of candidacy be a registered voter at an address within the municipality or in the ward if an office is from a ward. To become a party candidate, a declaration of candidacy must be filed with the county election board no earlier than 8:00 a.m. on the first Monday in February and no later than 5:00 p.m. on the next succeeding Wednesday. (Amended eff. 7/1/87).

SECTION 16-110. INDEPENDENT CANDIDATES

An independent candidate may have his name printed upon the general municipal election ballot as candidate for any office to be filled at the election. To become an independent candidate, a Declaration of Candidacy must be filed with the county election board no earlier than 8:00 a.m. on the first Monday in February and no later than 5:00 p.m. on the next succeeding Wednesday. An independent candidate must also be a registered voter at an address within the municipality, or of the ward where the office is from a ward for at least six (6) months prior to filing a declaration of candidacy. Filing as an independent candidate in an election or voting for such candidate shall not affect one's party affiliation or regularity. (Amended eff. 10/19/81).

SECTION 16-111. UNOPPOSED CANDIDATES IN PRIMARY ELECTION

Any candidate who is unopposed for an office in a primary election shall be deemed nominated and so certified; and his name shall not appear on the primary election ballot. If there are unopposed candidates for each of the offices which are up for election, no primary election shall be held.

SECTION 16-112. SPECIAL ELECTIONS - QUESTIONS WHICH MAY BE SUBMITTED

When the municipal governing body shall deem it advisable, it may, by resolution or ordinance, authorize the mayor to call a special election for the purpose of submitting to the registered voters of the municipality the question of issuing municipal bonds, of granting any franchise, or for any other purpose authorized by law.

SECTION 16-113. SPECIAL ELECTION BALLOT - PREPARATION AND ARRANGEMENT

The ballot for a special election shall be prepared by the secretary of the county election board and shall set forth the proposition or propositions to be voted upon, and if more than one proposition is submitted, they shall be arranged so that each proposition may be voted upon separately.

SECTION 16-114. CONDUCT OF SPECIAL ELECTIONS HELD FOR ELECTING OFFICERS

When the office of a municipal elected official is to be filled at a special election, the resolution or order of the governing body calling the election shall contain the following facts:

1. A filing period of three (3) days, on a Monday, Tuesday and Wednesday, not less than fifteen (15) days from the date of the resolution or order;

2. The date of the Special Primary Election, if any, not less than thirty (30) days after the close of the filing period; and

3. The date of the Special General Election, not less than thirty (30) days after the date of the Primary Election, if any, but if no primary election is called, not less than thirty (30) days after the close of the filing period.

A copy of the resolution or order shall be filed with the secretary of the county election board. The election shall be conducted under the laws applicable to general municipal elections. (Amended eff. 7/1/87).

PART 2. SPECIFIC PROVISIONS FOR STATUTORY CITIES AND TOWNS

SECTION 16-201. ALDERMANIC CITIES WITH ONE COUNCILMEMBER PER WARD - OFFICERS TO BE ELECTED - TERMS

In a statutory aldermanic city with one (1) councilmember per ward, the terms of the elected officers shall be staggered so that at any one general municipal election, the following officers are to be elected for four-year terms:

1. Councilmembers from odd-numbered wards;
2. The mayor;
3. The clerk;
4. The marshal; and
5. The street commissioner.

At the next general municipal election, the following officers are to be elected for four-year terms:

1. Councilmembers from even-numbered wards; and
2. The treasurer.

If the office of treasurer has been consolidated with any other office, elections for the office of treasurer and the office with which it has been consolidated shall be held at the time the election to fill the other office is held. The term of the consolidated office shall be concurrent with the term of the other office.

SECTION 16-202. FIRST ELECTION HELD IN ALDERMANIC CITIES WITH ONE COUNCILMEMBER PER WARD

At the first general municipal election held in the odd-numbered year following adoption of the aldermanic form of government with one (1) councilmember per ward, the officers to be elected and their terms are as follows:

1. Four-year terms: Councilmembers from odd-numbered wards; the mayor; the clerk; the marshal; and the street commissioner.

2. Two-year terms: Councilmembers from even-numbered wards; and the treasurer.

At general municipal elections held thereafter, the successors of the officers whose terms are expiring shall be elected for four-year terms.

SECTION 16-203. ALDERMANIC CITIES WITH TWO COUNCILMEMBERS PER WARD - OFFICERS TO BE ELECTED - TERMS

In a statutory aldermanic city with two councilmembers per ward, the terms of the elected officers shall be staggered so that at any one general municipal election, the following officers are to be elected for four-year terms:

1. One (1) councilmember from each ward of the city;

2. The mayor;

3. The clerk;

4. The marshal; and

5. The street commissioner.

At the next general municipal election, the following officers are to be elected for four-year terms:

1. One councilmember from each ward of the city; and

2. The treasurer.

If the office of treasurer has been consolidated with any other office, elections for the office of treasurer and the office with which it has been consolidated shall be held at the time the election to fill the other office is held. The term of the consolidated office shall be concurrent with the term of the other office.

SECTION 16-204. FIRST ELECTION HELD IN ALDERMANIC CITIES WITH TWO COUNCILMEMBERS PER WARD

At the first general municipal election held in the odd-numbered year following adoption of the aldermanic form of government with two councilmembers per ward, the officers to be elected and their terms are as follows:

1. Four-year terms: One councilmember from each ward of the city; the mayor; the clerk; the marshal; and the street commissioner.

2. Two-year terms: One councilmember from each ward of the city; and the treasurer.

At general municipal elections held thereafter, the successors of the officers whose terms are expiring shall be elected for four-year terms.

SECTION 16-205. TOWNS - OFFICERS TO BE ELECTED - TERMS

In a statutory town, the terms of the elected officers shall be staggered so that at any one general municipal election, the following officers are to be elected for four-year terms:

1. Trustees from odd-numbered wards; and

2. The clerk.

At the next general municipal election, the following officers are to be elected for four-year terms:

1. Trustees from even-numbered wards; and

2. The treasurer.

If the office of treasurer has been consolidated with any other office, elections for the office of treasurer and the office with which it has been consolidated shall be held at the time the election to fill the other office is held. The term of the consolidated office shall be concurrent with the term of the other office.

SECTION 16-206. FIRST ELECTION HELD IN TOWN

At the first general municipal election held in the odd-numbered year following adoption of the town board of trustees form of government, the officers to be elected and their terms are as follows:

1. Four-year terms: Trustees from odd-numbered wards; and the clerk.

2. Two-year terms: Trustees from even-numbered wards; and the treasurer.

At general municipal elections held thereafter, the successors of the officers whose terms are expiring shall be elected for four-year terms.

SECTION 16-207. ALDERMANIC CITIES AND TOWNS - APPOINTMENT OF CERTAIN OFFICIALS AFTER SUBMISSION TO VOTE

A. The city council of any city may provide by ordinance for the submission to a vote of the registered voters of the city the question of providing for the appointment by the mayor, with the approval of the council, of the city marshal, the street commissioner, the city clerk, the city treasurer, or the city clerk-treasurer.

B. The board of trustees of any town may provide by ordinance for the submission to a vote of the registered voters of the town the question of providing for the appointment by the board of trustees of the town clerk, the town treasurer or the town clerk-treasurer.

C. The question of appointing each official shall be submitted separately on the ballot. The question providing for the appointment of the clerk or the treasurer may be consolidated into one question provided the two offices are to be consolidated into the office of clerk-treasurer. The question providing for the appointment of any official shall read substantially as follows:

Shall the (Marshal, Street Commissioner, Clerk, Treasurer, Clerk-Treasurer) be appointed by the (mayor, with the approval of the council, board of trustees)?

( ) Yes.
( ) No.

If a majority of the votes cast are in favor of appointment to the office, the appointive position shall take effect at the end of the current term of the office. In cities, the appointive officer shall be appointed and may be removed by the mayor, with the approval of the council. In towns, the appointment and removal shall be by a majority vote of all the members of the board of trustees.

SECTION 16-208. COUNCIL-MANAGER CITIES - OFFICERS TO BE ELECTED - TERMS

In a statutory council-manager city, the terms of the elected officers shall be staggered so that at any one general municipal election, the following officers are to be elected for four-year terms:

1. Councilmembers from Wards One, Two and Five (if one).

At the next general municipal election, the following officers are to be elected for four-year terms:

1. Councilmembers from Wards Three, Four and Six (if one); and

2. The councilmember at large.

SECTION 16-209. FIRST ELECTION HELD IN COUNCIL-MANAGER CITY

At the first general municipal election held in the odd-numbered year following adoption of the statutory council-manager form of government, the officers to be elected and their terms are as follows:

1. Four-year terms: Councilmembers from Wards One, Two and Five (if one).

2. Two-year terms: Councilmembers from Wards Three, Four and Six (if one); and the councilmember at large.

At general municipal elections held thereafter, the successors of the officers whose terms are expiring shall be elected for four-year terms.

SECTION 16-210. STRONG-MAYOR-COUNCIL CITIES - OFFICERS TO BE ELECTED - TERMS

In a statutory strong-mayor-council city, the terms of the elected officers shall be staggered so that at any one general municipal election, the following officers are to be elected for four-year terms:

1. Councilmembers from Wards One, Two and Five (if one).

At the next general municipal election, the following officers are to be elected for four-year terms:

1. Councilmembers from Wards Three, Four and Six (if one); and
2. The mayor.

SECTION 16-211. FIRST ELECTION HELD IN STRONG-MAYOR-COUNCIL CITY

At the first general municipal election held in the odd-numbered year following adoption of the statutory strong-mayor-council form of government, the officers to be elected and their terms are as follows:

1. Four-year terms: Councilmembers from Wards One, Two and Five (if one).
2. Two-year terms: Councilmembers from Wards Three, Four and Six (if one); and the mayor.

At general municipal elections held thereafter, the successors of the officers whose terms are expiring shall be elected for four-year terms.

SECTION 16-212. COUNCIL-MANAGER AND STRONG-MAYOR-COUNCIL CITIES - FORM OF GENERAL MUNICIPAL ELECTION BALLOT

The ballots for the general election in a statutory council-manager or statutory strong-mayor-council city shall be of the office block type, listing the names of independent candidates and party nominees for each office under the respective office without party designation or emblems as follows:

For Councilmember from Ward One
(Vote for One)

_____ Name of independent candidate or party nominee

_____ Name of independent candidate or party nominee

For Councilmember from Ward Two
(Vote for One)

_____ Name of independent candidate or party nominee

_____ Name of independent candidate or party nominee

SECTION 16-213. TRANSITIONAL PROVISIONS FOR MUNICIPALITIES NOT IN CONFORMANCE WITH GENERAL ELECTION PROCEDURE

A. If the term of an elected officer as set forth in the notice of the last election for the office will expire in an even-numbered year, a regular municipal election or town meeting, if the municipality is subject to the Oklahoma Town Meeting Act, shall be held in order to elect a successor. The term of the successor shall be either three (3) or five (5) years as necessary in order to comply with the provisions of Section 16-101 et seq. of this title. Thereafter, the term of said office shall be four (4) years. Any such election or town meeting held in an even-numbered year shall be conducted in the manner provided by law applicable to municipal elections or town meetings, whichever is appropriate.

B. If the term of an elected officer as set forth in the notice of the last election for the office will expire in an odd-numbered year, but the term of office does not coincide with the offices named in Section 16-201 et seq. of this title, a regular municipal election or town meeting shall be held in order to elect a successor. The term of the successor shall be either two (2) or four (4) years as necessary in order to comply with the provisions of Section 16-101 et seq. of this title. Thereafter, the term of said office shall be four (4) years. (Amended 1988)

PART 3. OKLAHOMA TOWN MEETING ACT

SECTION 16-301 SHORT TITLE

Sections 1 through 15 of this act shall be known and may be cited as the "Oklahoma Town Meeting Act". (Added, 1988)

SECTION 16-302 MUNICIPALITIES REQUIRED TO HOLD TOWN MEETINGS - ELECTION - ORDINANCE PROVIDING ALTERNATIVE PROCEDURE - REPEAL OF ORDINANCE

A. Except as otherwise provided in this act, Section 16-301 et seq. of this title, sixty (60) days after the effective date of this act, all municipalities with fewer than one thousand (1,000) residents, according to the latest Federal Decennial Census, that are not governed by charter, shall elect officers and consider questions raised by initiative or referendum, pursuant to Section 15-101 et seq. of this title, at biennial town meetings or special town meetings of the voters of each municipality as provided in this act. Provided, that a municipality of fewer than one thousand (1,000) residents may at any time adopt an ordinance requiring that its officers shall be elected and initiative and referendum questions shall be decided only through elections conducted by the county election board pursuant to Section 16-101 et seq. of this title. Any municipality that passes an ordinance pursuant to this section shall upon adoption of the ordinance provide a copy of the ordinance to the county election board of the county in which the municipality is located.

B. If the ordinance is repealed, elections of the municipality shall be at a town meeting. The municipality shall provide a copy of the repealer to the county election board of the county in which the municipality is located. If a municipality with fewer than one thousand (1,000) residents fails to hold its regular municipal elections as required by law, the municipality shall be subject to the provisions of the Oklahoma Town Meeting Act, Section 16-301 et seq. of this title; provided, further, that such municipality may adopt a resolution requiring that its elections be conducted by the county election board as provided in this section. (Amended 1989)

SECTION 16-303 TIME FOR TOWN MEETING - PURPOSE - SPECIAL TOWN MEETINGS

In municipalities subject to the provisions of Section 16-301 et seq. of this title, a biennial town meeting of the voters shall be held on the first Tuesday in April in each odd-numbered year for the purpose of electing municipal officers and considering questions raised by initiative or referendum pursuant to Section 15-101 et seq. of this title.

In addition to the election proceedings of said meeting the mayor or presiding officer may upon compliance with the Open Meeting Act, Section 301 et seq. of Title 25 of the Oklahoma Statutes and other provisions appropriate to the law, conduct regular business meetings or any other town business which would be in order and of interest to those citizens in attendance. Special town meetings for these purposes may be called at other times as provided in this act. (Amended 1990)

SECTION 16-304 NOTICE - PUBLICATION - POSTING - CONTENTS

Notice of the biennial town meeting or special town meeting for the purposes of electing officers and considering initiative or referendum questions shall be given by the governing body of the municipality in accordance with the Oklahoma Open Meeting Act, Section 301 et seq. of Title 25 of the Oklahoma Statutes. The notice shall be signed by a majority of the members of the governing body.

In addition to the requirements of the Oklahoma Open Meeting Act, notice of the biennial town meeting and any special town meeting shall be given by publishing notice of the meeting stating the date, time, place and agenda in a newspaper of general circulation in the municipality at least ten (10) days before the date of the meeting. If there is no newspaper of general circulation in the municipality, the notice shall be given by posting a copy of the notice and agenda in at least five (5) public places in the municipality. The notice shall list the offices to be filled, including the number of officers to be elected for four-year terms and the number of officers to be elected to fill unexpired terms, and the questions to be voted on, if any. (Added 1988)

SECTION 16-305 SPECIAL TOWN MEETING - MEETING CALLED BY BOARD OF COUNTY COMMISSIONERS

A. When a municipality fails to hold a biennial meeting on the first Tuesday of April in an odd-numbered year, the governing body shall immediately schedule and give notice of a special town meeting for the purpose of electing officers. Such notice shall be in accordance with Section 4 of this act.

B. If the governing body fails or refuses to hold a biennial or special town meeting for the purpose of electing officers, the board of county commissioners of the county in which the municipality is located shall call a town meeting for the purpose of electing officers. The sheriff, or his deputy, of the county in which the municipality is located shall attend any town meeting called by the board of county commissioners, and if the municipal officers fail to conduct the meeting, shall moderate the meeting. (Added 1988)

SECTION 16-306 PRESIDING OFFICER - RULES OF ORDER, CONDUCT AND DECORUM - MINUTES - BALLOTS - NOMINATION AND ELECTION OF OFFICIALS - FALSE AFFIDAVITS

A. Except as otherwise provided in this act, Section 16-301 et seq. of this title, the mayor shall be the presiding officer of town meetings, shall decide questions of order and shall make public declaration of votes taken. Robert's Rules of Order shall govern all town meetings, except when such rules are inconsistent with Oklahoma law. The presiding officer may establish other rules of conduct and decorum for the meetings consistent with the Oklahoma Town Meeting Act, Section 16-301 et seq. of this title. When the office of mayor is vacant or if the mayor is unable to attend the town meeting, one of the members of the governing body shall be elected by the remaining members of the governing body to preside over the town meeting.

B. The municipal clerk shall keep the minutes of the meeting. The minutes shall separately record the number of votes for and against each candidate and each question and shall record the total number of votes cast for each position. Paper ballots shall be preserved in the municipal clerk's office for a period of six (6) months following the town meeting at which said ballots were cast.

C. Officials elected at town meetings shall be nominated and elected at large by the registered voters present from nominations taken from the floor. Prior to accepting any nominations the presiding officer shall state the number of governing body offices to be elected for four-year terms and the number of governing body offices to be elected to fill unexpired terms, if any. There shall be separate nominations and balloting for each designated term. The nominee who receives a plurality of the votes cast for the office of the designated term shall be elected for that designated term. If more than one office is to be filled for a designated term, the voters shall vote for the designated number of offices to be filled and, the nominees receiving the largest pluralities shall be elected to those offices. All votes shall be taken by secret ballot; provided that if there is only one candidate for an office, he or she may be elected by acclamation upon proper motion. In case of a tie vote, the municipal clerk shall immediately select the electee or electees by lot as follows: The clerk shall write or print the names of the tied nominees on similar pieces of paper and place the papers in a container in view of the persons attending the town meeting. The clerk shall designate a person, who shall not be one of the nominees, to draw one name for each office to be filled and the nominee or nominees whose names are so drawn shall be deemed elected. All other papers in the container shall then be exposed for examination. Only a registered voter who has been a registered voter at an address within the municipality for at least six (6) months prior to the date of the town meeting at which the elections are held shall be qualified for nomination for office. To be eligible for election, any person who is nominated for office must swear under oath that he or she has been a registered voter at an address within the municipality for the last six (6) months. Only qualified registered voters who are present at the town meeting at which the elections are held shall be eligible for nomination for municipal office, provided that a qualified registered voter who is not present may be nominated if he or she has agreed in writing to accept the office if elected and has sworn an affidavit that he or she has been a registered voter at an address within the municipality for the last six (6) months. Any person who falsely swears or signs a false affidavit that he or she is qualified for municipal office shall be guilty of a felony. (Amended 1989)

SECTION 16-307 VOTING ELIGIBILITY - POLLBOOK - ILLEGAL VOTING - PENALTY

A. The presiding officer at a town meeting shall follow reasonable and necessary procedures to ensure that persons who are not registered voters of the town do not vote. Registered voters shall be seated in a clearly marked area separate from persons not registered to vote.

B. To be eligible to vote at a town meeting, a person must be registered with the county election board at an address located within the municipality. Before being seated in the section reserved for registered voters, each voter shall sign his or her name in a pollbook, said signature to constitute a sworn affidavit on the part of the voter that he or she is eligible to vote at the election. The pollbook shall be prepared by the municipal clerk and shall be substantially the same form as the pollbook prescribed by the State Election Board for school district elections. For such purpose, the municipal clerk or designee of the municipal clerk shall be authorized to administer the oath or affirmation contained in the affidavit. The pollbook shall be on file in the office of the municipal clerk and shall be open to public inspection during reasonable office hours; provided, however, that such pollbooks may be destroyed by the municipal clerk at the end of six (6) months from the date of the election wherein such pollbook was used. Any person knowingly voting illegally or found guilty of casting more than one vote for any office or on any question considered at the meeting shall be punished by a fine of not more than One Thousand Dollars ($1,000.00) or by imprisonment in the county jail for not to exceed thirty (30) days or both such fine and imprisonment. (Added 1988)

SECTION 16-308 ELECTION OF MUNICIPAL OFFICERS

A person present at the meeting electing him or her to municipal office shall be treated as accepting, unless he or she declines before the meeting is adjourned. When not present, he or she shall be served as soon as possible with a written notice of election, signed and mailed by the municipal clerk. No person elected shall assume the duties of the office until he or she has signed the oath of office as required by law. (Added 1988)

SECTION 16-309 FILING OF LIST OF MUNICIPAL OFFICERS ELECTED - NOTIFICATION OF CHANGES IN LIST

The municipal clerk shall file with the secretary of the county election board a list of the names and addresses of the municipal officers elected and shall notify the secretary of the county election board of any changes in the list as filed. (Added 1988)

SECTION 16-310 CONTEST OF ELECTION BY NOMINEE

Any person nominated for municipal office may, at any time before 5:00 p.m. of the third business day following the town meeting in which he or she was nominated, contest the correctness of the announced results of

said election by filing a written petition with the district court of any county in which the municipality is located. (Added 1988)

SECTION 16-311 PETITION ALLEGING FRAUD - BOND - HEARING - ANSWER - JUDGMENT - INELIGIBILITY FOR OFFICE - LIABILITY OF CONTESTANT - DAMAGES

When a petition alleging fraud is filed, said petition must be accompanied by a cash bond of Five Thousand Dollars ($5,000.00), running in favor of the contestee and conditioned upon payment of any and all liabilities or judgments arising from the contest so filed. In said petition, contestant must allege the specific act constituting such alleged fraud and the names of the alleged perpetrators of such fraud. If such petition is filed in the manner herein provided, the district judge of the county in which the alleged fraud occurred, or such other judge as may be assigned by the Supreme Court, shall hear and determine said issue without delay or continuance of more than one (1) day. On the day of such hearing, the contestee may file answer to such petition or may file cross petition, setting forth in detail, as required of a petitioner herein, such claim of fraud. An original petition or cross petition must be under oath and under penalty of perjury. The judge shall try and determine the issues formed by such pleadings and render such judgment as he or she may deem just and proper, according to the evidence submitted. The decision of said district judge shall be final as to any changes in the total votes, and a copy of such judgment and decision shall be furnished the officer who presided at the town meeting. In any case where fraud is proved on the part of a nominee, he or she shall be declared ineligible for the office for which he or she was nominated. In all cases where a petition is filed which alleges fraud, but after hearing said allegations are not reasonably sustained by competent evidence, the contestant shall be civilly liable in damages to the contestee for all damages sustained, including a reasonable attorney fee and all reasonable and proper costs of conducting such contest; and in the event it be alleged and found that such petition was frivolous in nature, the contestee may also be allowed punitive damages to be paid by said petitioner. (Added 1988)

SECTION 16-312 PETITION ALLEGING IRREGULARITIES OTHER THAN FRAUD - SUFFICIENCY OF ALLEGATIONS - HEARING

When a petition alleging irregularities other than fraud is filed, the petition must allege a sufficient number of irregularities and of such nature as to:

1. Prove that the contestant is lawfully entitled to be announced the winner; or

2. Prove that it is impossible to determine with mathematical certainty which nominee is entitled to be announced the winner. Proof of failure of the presiding officer to take the vote by a paper ballot shall be sufficient proof of this requirement.

If such allegations are not made, the petition shall be deemed frivolous by the presiding judge and shall be dismissed. Said petition must set forth specific allegations of irregularities. If said petition is filed in the manner herein provided, the district judge of the county or such other judge as may be assigned by the Supreme Court shall hear and determine said issue in the same manner as provided for a petition alleging fraud. (Amended 1989)

SECTION 16-313 IMPOSSIBILITY OF DETERMINING WINNER - SPECIAL TOWN MEETING TO FILL CONTESTED OFFICE

In the event, after a hearing is conducted pursuant to Section 11 or 12 of this act, it is deemed impossible to determine who should be announced the winner, the judge shall notify the presiding officer of the town meeting of the same. It shall then be the duty of the presiding officer to call a special town meeting for the purpose of filling the contested office, provided that any nominee upon whom fraud has been proved shall not be a nominee in the new election. (Added 1988)

SECTION 16-314 OMISSION OF OR NONCOMPLIANCE WITH NOTICE REQUIREMENTS - CORRECTION - RECTIFICATION OF OTHER ERRORS AND OMISSIONS - VALIDATION OF BUSINESS OF ORIGINAL ACTION

When any of the requirements of this act as to notice of a biennial or special town meeting have been omitted or not complied with, the omission or noncompliance, if the meeting and the business transacted at it is otherwise legal and within the scope of the municipal powers, may be corrected and legalized by a majority vote of the registered voters present at a regular town meeting or special town meeting of the municipality called for that purpose, with notice as required by Section 4 of this act. The question to be voted upon shall substantially be, "Shall the action taken at the meeting of this town held on (state date) in spite of the fact that (state error or omission), and any act or action of the municipal officers or agents pursuant thereto be readopted, ratified and confirmed?". Errors or omissions in the conduct of an original meeting which are not the result of an unlawful notice or noncompliance within the scope of the notice, may be rectified by a resolution of the governing body of the municipality passed by a majority of the members of the governing body at a regular meeting or a special meeting called for that purpose, stating that the defect was the result of oversight, inadvertence or mistake. When an error or omission of this nature has been thus corrected by resolution, all business within the terms of the action

of the qualified voters shall be as valid as if the requirements had been initially complied with, on condition, however, that the original action thereby corrected by the governing body was in compliance with the legal exercise of its governing powers. (Added 1988)

SECTION 16-315 ELECTIONS CONDUCTED BY COUNTY ELECTION BOARD - OPTION TO BE HELD AT TOWN MEETING

Whenever in Title 11 of the Oklahoma Statutes provisions are made for election of officers or consideration of questions at elections conducted by the county election board pursuant to Section 16-101 et seq. of Title 11 of the Oklahoma Statutes, such elections may be held or questions considered at biennial or special town meetings, if the municipality is subject to the provisions of this act. (Added 1988)

ARTICLE XVII

MUNICIPAL FINANCES

Part 1. General Provisions

Section	
17-101	Borrowing, Appropriation of Moneys - Investments
17-102	Payment of Claims - Warrant and Check as One Instrument -Emergency Payments
17-103	Actions Against Municipality
17-104	Liability for Voting Unlawful Claims
17-105	Annual Audit of Books and Accounts
17-105.1	Filing of audits and reports - Forms - Public inspection - Compiling Information
17-106	Contents of Audit Report
17-107	Failure to File Audit Report
17-108	Trusts Exempt
17-109	Capital Improvement Fund - Authority to Create
17-110	Capital Improvements - Definitions
17-111	Approval of Claims From Capital Improvement Fund
17-112	Manufacturing Establishments and Public Utilities - Exemption from Municipal Taxation
17-113	Publication of City Financial Statements
17-114	Vendor Invoices and Contract Estimates - Payment Procedures - Uniform Jackets

Part 2. Municipal Budget Act

17-201	Municipal Budget Act
17-202	Public Policy
17-203	Application - Continuation
17-204	Definitions
17-205	Budget Required - Chief Executive Officer
17-206	Contents - Estimates - Budget Requirements
17-207	General Fund and Other Fund - Sinking Fund
17-208	Notice and Hearing
17-209	Adoption of Budget - Filing - Appropriation - Levy by County Excise Board
17-210	Protests - Public Record
17-211	Deficits - Prohibitions - Violations - Penalty
17-212	Establishment of Funds - Accounts
17-213	Classifications of Revenues and Expenditures
17-214	Reserve
17-215	Funds and Account Transfers
17-216	Supplemental Appropriations - Limitations Procedure

ARTICLE XVI

MUNICIPAL FINANCES

PART 1. GENERAL PROVISIONS

SECTION 17-101. BORROWING, APPROPRIATION OF MONEYS - INVESTMENTS

A. Any act of a municipal governing body which provides for the borrowing of monies or for appropriating monies shall not be valid unless a majority of the governing body of the municipality votes in favor of the action. The municipal governing body may not appropriate or draw any order on the treasurer for monies unless the same has been apropriated in the manner provided by law or ordered in pursuance of some object provided for by law.

B. A municipality may invest its funds in any bond, note, or other evidence of indebtedness issued by those agencies, authorities, instrumentalities, or public entities whose governing boards are appointed by the municipality or issued by any public trust of which it is sole beneficiary, excluding obligations which are industrial development bonds as defined in the provisions of Section 103 of the Internal Revenue Code of 1953, as amended, and regulations promulgated thereto.

C. If a municipality has established a system for the separate accounting of monies by fund sources that has been certified by the auditor of the municipality, the treasurer of such municipality acting as an officer of the municipality or as agent of any instrumentality or public trust of the municipality may deposit into one or more accounts of an authorized depository all monies coming into his custody. Unless otherwise provided for by law, interest earnings shall be prorated according to fund source. (Amended 11/1/84)

SECTION 17-102. PAYMENT OF CLAIMS - WARRANT AND CHECK AS ONE INSTRUMENT - EMERGENCY PAYMENTS

A. Any invoice against a municipality must be presented in writing and examined in the manner provided by law. No account or invoice may be paid by the municipality unless it has been audited and allowed by the governing body and an entry of the account or invoice is made in the proper books kept for that purpose. Except as otherwise provided for in this subsection, monies may be drawn from the municipal treasury only upon a proper warrant as provided by law. In lieu of issuing such warrant, a municipality may enter the warrant on the warrant register and record payment of the warrant by check, wire transfer, direct payroll deposit, or other instrument or method of disbursement through the Federal Reserve System.

B. A city or town may issue a negotiable instrument which will serve as both a warrant on the municipal treasury and a check ordering payment of the warranted amount of money from the municipality's account. This instrument shall be prepared and issued in accordance with procedures and requirements provided by law for a municipal warrant and a municipal check and shall be signed by the municipal clerk, treasurer and mayor. Printing on the instrument shall indicate that the instrument is a "warrant" of the municipality and a "check" drawn on the municipality's account. The provisions of state law on uniform facsimile signatures of public officials, Sections 601 through 606 of Title 62 of the Oklahoma Statutes, shall be applicable to instruments authorized by this section.

C. If a majority or all of governing body offices in a town municipality become vacant, thereby preventing approval of amounts lawfully owing on invoices and purchase orders, the interim mayor or the remaining governing body members, as the case may be, may authorize emergency payments of amounts owing on invoices or purchase orders for a period not to exceed ninety (90) days after the date that a majority of the offices become vacant. The interim mayor or the remaining governing body members may also authorize payment of purchase orders for payroll, utility bills, or other usual and regular obligations of the municipality. Any such authorization and payment shall not exceed the unencumbered and unexpended balance of the appropriation made for that purpose, nor may the total amount of such emergency authorizations and payments exceed fifteen percent (15%) of the total appropriations approved for the town government for the fiscal year. Any warrant issued pursuant to this section shall state that it is being issued under emergency circumstances and by special authority of this section. (Amended 1988).

SECTION 17-103. ACTIONS AGAINST MUNICIPALITY

No costs may be recovered against a municipality, in any action brought against it, for any unliquidated claim which has not been presented to the governing body for auditing, nor for claims allowed in part unless the recovery shall be for a greater sum than the amount allowed with the interest due. No action may be maintained against a municipality in exercising or failing to exercise any corporate power or authority where such action would not lie against a private individual under like circumstances.

SECTION 17-104. LIABILITY FOR VOTING UNLAWFUL CLAIMS

Any governing body member who intentionally votes to appropriate money or to allow any bill or claim which is not authorized by law shall be personally liable to the municipality for the amount of such money appropriated, or bills or claims allowed, with costs of suit,in an action before any court of competent jurisdiction.

SECTION 17-105. ANNUAL AUDIT OF BOOKS AND ACCOUNTS

The governing body of each municipality with an income of Twenty-five Thousand Dollars ($25,000.00) or more to its general fund during a fiscal year shall cause to be prepared, by an independent licensed public accountant or a certified public accountant, an annual audit of the funds, assets, books and records of the clerk and treasurer of the municipality. Such audit shall be ordered within thirty (30) days of the close of each fiscal year. Certified copies shall be filed with the county clerk and the State Auditor and Inspector within six (6) months after the close of the fiscal year in accordance with the provisions of Sections 24102 and 24103 of Title 68 of the Oklahoma Statutes. The expense of the audit shall be paid from the general fund of the municipality. (Amended, effective 11/1/87)

SECTION 17-105.1 FILING OF AUDITS AND REPORTS - FORMS - PUBLIC INSPECTION - COMPILING INFORMATION

An auditor shall file with the State Auditor and Inspector, at the same time a certified copy of an audit is filed as required in Section 17-105 of Title 11 of the Oklahoma Statutes, two (2) copies of a report setting forth for the fiscal year audited the funds available to the municipality and the use of those funds. The report shall also include information relating to the duly constituted authorities of the municipality and shall be on a form approved by the State Auditor and Inspector. Copies of said audit and the report shall be made available for public inspection by the municipality and the State Auditor and Inspector. The State Auditor and Inspector may contract for the compilation and reporting of the information submitted on the report. (Amended 11/1/84)

SECTION 17-106. CONTENTS OF AUDIT REPORT

The annual audit report of a municipality shall contain:

1. A statement of the scope of the examination;

2. The auditor's opinion as to whether the audit was made in accordance with generally accepted auditing standards applicable in the circumstances;

3. The auditor's opinion as to whether the financial statements included in the audit report present fairly the results of the operations during the period audited;

4. The auditor's opinion as to whether the financial statements accompanying the audit were prepared in accordance with generally accepted accounting principles applicable to cities and towns;

5. The reason or reasons an opinion is not rendered with respect to paragraphs 3 and 4 of this section in the event the auditor is unable to express an opinion with respect thereto; and

6. Financial statements presented in such form as to disclose the operations of each fund of the municipality and a statement of the operation of all funds.

SECTION 17-107. FAILURE TO FILE AUDIT REPORT

If a municipality does not file a copy of its audit as provided in Section 17-105 of this title, the State Auditor and Inspector shall notify the Oklahoma Tax Commission which shall withhold from the municipality its monthly allocations of gasoline taxes until the audit report is filed. (Amended, effective 4/6/79)

SECTION 17-108. TRUSTS EXEMPT

The requirements of Sections 17-105 through 17-107 of this title shall not apply to trusts of which a city or town is the beneficiary, the same being covered under Section 180.1 of Title 60 of the Oklahoma Statutes.

SECTION 17-109. CAPITAL IMPROVEMENT FUND - AUTHORITY TO CREATE

The municipal governing body may create a capital improvement fund and place in the fund any money available to the municipality. Money in the fund may be accumulated from year to year. The fund shall be placed in an insured interest bearing account. The fund shall be nonfiscal and shall not be considered in computing any levy when the municipality makes its estimate to the excise board for needed appropriations. Money in the capital improvement fund may be expended for any capital improvement.

SECTION 17-110. CAPITAL IMPROVEMENTS - DEFINITIONS

For the purpose of creating a capital improvement fund and expending money therefrom, capital improvement shall mean all items and articles, either new or replacements, not consumed with use but only diminished in value with prolonged use, including but not limited to roads and streets, drainage improvements, water and sewerage improvements, machinery, equipment, furniture and fixtures, all real property, all construction or reconstruction of buildings, appurtenances and improvements to real property, the cost and expenses related thereto of rights-of-way or other real property, engineering, architectural or legal fees, and payment for improvements for which subsequent reimbursement is made to the capital improvement fund.

SECTION 17-111. APPROVAL OF CLAIMS FROM CAPITAL IMPROVEMENT FUND

No funds may be appropriated or expended from the capital improvement account in the absence of a recorded vote by the governing body and until claims duly verified by affidavit are presented and approved by the governing body.

SECTION 17-112. MANUFACTURING ESTABLISHMENTS AND PUBLIC UTILITIES -EXEMPTION FROM MUNICIPAL TAXATION

Any municipality may, by a majority vote of the registered voters of the municipality voting on the question, exempt from municipal taxation for a period not to exceed five (5) years new manufacturing establishments and public utilities locating in the municipality.

SECTION 17-113. PUBLICATION OF CITY FINANCIAL STATEMENTS

The council of each city having a population in excess of five thousand (5,000) persons, according to the latest federal census, shall cause to be published in October and in April of each year a full and detailed statement of the receipts, expenditures and indebtedness of the city for the periods ending on the last day of September and the last day of March, respectively. All publications mentioned in this section shall be made in a newspaper of general circulation in the city. The provisions of this section shall not apply to any city governed by charter where the charter provides for the manner or procedure for publication of such financial information.

SECTION 17-114. VENDOR INVOICES AND CONTRACT ESTIMATES - PAYMENT PROCEDURES - UNIFORM JACKETS

To facilitate the payment of vendor invoices and contract estimates the municipal finance officer may design a uniform jacket to be used by all departments and divisions of the municipality whereon shall be provided summarized information relative to the enclosed invoices or contract estimates, together with a space for the approval of the head of the department or division approving said vendor invoices or contract estimates for payment. Vendor invoices and contract estimates may be accepted by the municipality in lieu of the claim form previously required in the same manner as commercial invoices are paid. If utilized, vendor invoices and contract estimates shall be filed with the department or division receiving the merchandise or services in the same manner as invoices are filed with commercial firms. Upon receipt of invoices or contract estimates the head of the department or division or his authorized agent, may approve said documents for payment by executing a certificate of delivery or acceptance of the goods or services. Whereupon, the authorized official of said agency may approve said invoices or contract estimates for payment by enclosing the invoice or contract estimate in a jacket provided for such purpose and affixing his or her approval in the space provided on the jacket. (Added 1990)

PART 2. MUNICIPAL BUDGET ACT

SECTION 17-201. MUNICIPAL BUDGET ACT.

This act may be cited as the "Municipal Budget Act". (Effective 10/1/79)

SECTION 17-202. PUBLIC POLICY.

The purpose of this act is to provide an alternate budget procedure for municipal governments which will:

1. Establish standard and sound fiscal procedures for the adoption and administration of budgets;

2. Make available to the public and investors sufficient information as to the financial conditions, requirements and expectations of the municipal government; and

3. Assist municipal governments to improve and implement generally accepted standards of finance management. (Effective 10/1/79)

SECTION 17-203. APPLICATION - CONTINUATION.

This act shall apply to any incorporated city or town which, by resolution of the governing body, opts to come under and comply with all its provisions and requirements. Once a municipality has selected the Municipal Budget Act to govern its budget procedures, the provisions of this act shall take precedence over any other state laws applicable to municipal budgets, except as may be provided otherwise in this act, and supersede any conflicting laws. Any action of a municipal governing body to implement, rescind or repeal the application of the Municipal Budget Act shall be effective as of the beginning or end of a budget year pursuant to this act. (Effective 10/1/79)

SECTION 17-204. DEFINITIONS.

As used in this act:

1. "Account" means an entity for recording specific revenues or expenditures, or for grouping related or similar classes of revenues and expenditures and recording them within a fund or department;

2. "Appropriation" means an authorization and allocation of money to be expended for a purpose;

3. "Budget" means a plan of financial operations for a fiscal year, including an estimate of proposed expenditures for given purposes and the proposed means for financing them;

4. "Budget summary" means a tabular listing of revenues and expenditures by fund and by department within each fund for the budget year;

5. "Budget year" means the fiscal year for which a budget is prepared or being prepared;

6. "Chief executive officer" means the mayor of an aldermanic city or a strong-mayor-council city, the mayor of a town, or the city manager or chief administrative officer as it may be defined by applicable law, charter or ordinance;

7. "Current year" means the year in which the budget is prepared and adopted, or the fiscal year immediately preceding the budget year;

8. "Deficit" means the excess of the liabilities, reserves, contributions and encumbrances of a fund over its assets as reflected by its book of account;

9. "Department" means a functional unit within a fund which carries on a specific activity, such as a fire department or a police department within a general fund;

10. "Estimated revenue" means the amount of revenues estimated to be received during the budget year in each fund for which a budget is prepared. Revenue includes any appropriated fund balance in the budget of revenues for a fund for the budget year;

11. "Fiscal year" means the annual period for reporting fiscal operations which begins and ends on dates as the Legislature provides;

12. "Fund" means an independent fiscal and accounting entity with a self-balancing set of accounts to record cash and other financial resources, together with all liabilities, which are segregated for the purpose of carrying on specific activities or attaining certain objectives;

13. "Fund balance" means the excess of the assets of a fund over its liabilities, reserves, contributions and encumbrances, as reflected by its books of account.

14. "Governing body" means the city council of a city, the board of trustees of a town, or the legislative body of a municipality as it may be defined by applicable law or charter provision;

15. "Immediate prior fiscal year" means the year next preceding the current year;

16. "Levy" means to impose ad valorem taxes or the total amount of ad valorem taxes for a purpose or entity;

17. "Operating reserve" means that portion of the fund balance which has not been appropriated in a budget year; and

18. "Municipality" means any incorporated city or town. (Amended, effective 5/27/80)

SECTION 17-205. BUDGET REQUIRED - CHIEF EXECUTIVE OFFICER.

At least thirty (30) days prior to the beginning of each fiscal year, a budget for the municipality shall be prepared by the chief executive officer and submitted to the governing body. The chief executive officer may require any other officer or employee who is charged with the management or control of any department or office of the municipality to furnish estimates for the fiscal year covering estimated revenues and expenditures of the department or office on or before a date set by the chief executive officer. (Effective 10/1/79)

SECTION 17-206. CONTENTS - ESTIMATES - BUDGET REQUIREMENTS.

A. The municipal budget shall present a complete financial plan for the municipality and shall present information necessary and proper to disclose the financial position and condition of the municipality and the revenues and expenditures thereof, both past and anticipated.

B. The budget shall contain a budget summary. It shall also be accompanied by a budget message which shall explain the budget and describe its important features. The budget format shall be as provided by the governing body in consultation with the chief executive officer. It shall contain at least the following in tabular form for each fund, itemized by department and account within each fund:

1. Actual revenues and expenditures for the immediate prior fiscal year;

2. Revenues and expenditures for the current fiscal year as shown by the budget for the current year as adopted or amended; and

3. Estimates of revenues and expenditures for the budget year.

C The estimate of revenues for any budget year shall include probable income by source which the municipality is legally empowered to collect or receive at the time the budget is adopted. The estimate shall be based on a review and analysis of past and anticipated revenues of the municipality Any portion of the budget of revenues to be derived from ad valorem property taxation shall not exceed the amount of tax which is available for appropriation, as finally determined by the county excise board, or which can or must be raised as required by law. The budget of expenditures for each fund shall not exceed the estimated revenues for each fund. No more than ten percent (10%) of the total budget for any fund may be budgeted for miscellaneous purposes. Included in the budget of revenues or expenditures for any fund may be amounts transferred from or to another fund. Any such interfund transfer must be shown as a disbursement from the one fund and as a receipt to the other fund. (New, effective 10/1/79)

SECTION 17-207. GENERAL FUND AND OTHER FUND - SINKING FUND.

Any monies received or expended by a municipality must be accounted for by fund and account. Each municipality shall prepare a budget for the general fund and for other funds as the governing body may require pursuant to Section 17-212 of this title. The municipal governing body shall determine the needs of the municipality for sinking fund purposes, pursuant to Section 431 of Title 62 of the Oklahoma Statutes, Section 2497 of Title 68 of the Oklahoma Statutes, and Section 28 of Article 10 of the Oklahoma Constitution, and include these requirements in the debt service fund budget for the budget year. (Amended 7/1/84)

SECTION 17-208. NOTICE AND HEARING.

The municipal governing body shall hold a public hearing on the proposed budget no later than fifteen (15) days prior to the beginning of the budget year. Notice of the date, time and place of the hearing, together with the proposed budget summary, shall be published in a newspaper of general circulation in the municipality not less than five (5) days before the date of the hearing. The municipal clerk shall make available a sufficient number of copies of the proposed budget as the governing body shall determine and have them available for review or for distribution or sale at the office of the municipal clerk. Whenever the total operating budget, not including debt service, does not exceed Twelve Thousand Dollars ($12,000.00) per year, the proposed budget summary and notice may be posted at the governing body's principal headquarters in lieu of publication in a newspaper. At the public hearing on the budget any person may present to the governing body comments, recommendations or information on any part of the proposed budget. (Effective 10/1/79)

SECTION 17-209. ADOPTION OF BUDGET - FILING - APPROPRIATION - LEVY BY COUNTY EXCISE BOARD.

After the hearing and at least seven (7) days prior to the beginning of the budget year, the governing body shall adopt the budget. The governing body may add or increase items or delete or decrease items in the budget. In all cases the proposed expenditures shall not exceed the estimated revenues for any fund.

B. The adopted budget shall be filed with the excise board of each county in which the municipality is located on or before the first day of the budget year. At the same time that the budget is filed with the excise board, one copy of the budget as adopted shall be transmitted to the State Auditor and Inspector and one copy shall be kept on file in the office of the municipal clerk.

C. The adopted budget shall be in effect on and after the first day of the fiscal year to which it applies. The budget as adopted and filed with the State Auditor and Inspector shall constitute an appropriation for each fund, and the appropriation thus made shall not be used for any other purpose except as provided by law.

D. At the time required by law, the county excise board shall levy the taxes necessary for the municipality's sinking fund for the budget year pursuant to Section 431 of Title 62 of the Oklahoma Statutes. (Effective 10/1/79)

SECTION 17-210 PROTESTS - PUBLIC RECORD.

Within fifteen (15) days after the filing of any municipal budget with the State Auditor and Inspector, any taxpayer may file protests against any alleged illegality of the budget in the manner provided by this section and Sections 24104 through 24111 of Title 68 of the Oklahoma Statutes. The fifteen-day protest period begins upon the date the budget is received in the Office of the State Auditor and Inspector. After receipt of a taxpayer protest, the State Auditor and Inspector shall transmit by certified mail one copy of each protest to the municipal clerk, and one copy of each protest to the county treasurer and the excise board of each county in which the municipality is located. The taxpayer protest shall specify the alleged illegality in the budget and the grounds upon which the alleged illegality is based. Any protest filed by any taxpayer shall inure to the benefit of all taxpayers. If no protest is filed by any taxpayer within the fifteen-day period, the budget and any appropriations thereof shall be deemed legal and final until amended by the governing body or the county excise board as authorized by law. Taxpayers shall have the right at all reasonable times to examine the budget on file with the municipal clerk, the

county excise board, or the State Auditor and Inspector for the purpose of checking illegalities in the budget or for filing protests in accordance with this section and Sections 24104 through 24111 of Title 68. (Amended, effective 5/27/80).

SECTION 17-211. DEFICITS - PROHIBITIONS - VIOLATIONS - PENALTY.

A. No expenditure may be authorized or made by any officer or employee which exceeds any fund balance for any fund of the budget as adopted or amended or which exceeds the appropriation for any fund of the budget as adopted or amended. Any balance remaining in a fund at the end of the budget year shall be carried forward to the credit of the fund for the next budget year.

B. It shall be unlawful for any officer or employee of the municipality in any budget year:

1. To create or authorize creation of a deficit in any fund; or

2. To authorize. make or incur expenditures or encumbrances in excess of ninety percent (90%) of the appropriation for any fund of the budget as adopted or amended until revenues in an amount equal to at least ninety percent (90%) of the appropriation for the fund have been collected. Any fund balance which is included in the appropriation for the fund is considered revenue in the budget year for which it is appropriated. Expenditures may then be made and authorized so long as any expenditure does not exceed any fund balance.

C. Any obligation that is contracted or authorized by any officer or employee in violation of this act shall become the obligation of the officer or employee himself and shall not be valid or enforceable against the municipality. Any officer or employee who violates this act shall forfeit his office or position and shall be subject to such civil and criminal punishments as are provided by law. Any obligation, authorization for expenditure or expenditure made in violation of this act shall be illegal and void. (Effective 10/1/79)

SECTION 17-212. ESTABLISHMENT OF FUNDS - ACCOUNTS.

A municipality shall establish funds consistent with legal and operating requirements. Each municipality shall maintain according to its own needs some or all of the following funds or ledgers in its system of accounts:

1. A general fund, to account for all monies received and disbursed for general municipal government purposes, including all assets, liabilities, reserves, fund balances, revenues and expenditures which are not accounted for in any other fund or special ledger account. All monies received by the municipality under the motor fuel tax or under the motor vehicle license and registration tax and earmarked for the street and alley fund may be deposited in the general fund and accounted for as a "street and alley account" within the general fund. Expenditures from this account shall be made as earmarked and provided by law. All references to the street and alley fund or to the special fund earmarked for state-shared gasoline and motor vehicle taxes may mean the street and alley account provided in this section;

2. Special revenue funds, as required, to account for the proceeds of specific revenue sources that are restricted by law to expenditures for specified purpos s;

3. Debt service fund, which shall include the municipal sinking fund, established to account for the retirement of general obligation bonds or other long term debt and payment of interest thereon and judgments as provided by law. Any monies pledged to service general obligation bonds or other long term debt must be deposited in the debt service fund;

4. Capital improvement fund, to account for financial resources segregated for acquisition, construction or other improvement related to capital facilities other than those financed by general long term debt;

5. Enterprise funds, to account for each utility or enterprise or other service, other than those operated as a department of the general fund, where the costs are financed primarily through user charges or where there is a periodic need to determine revenues earned, expenses incurred or net income for a service or program;

6. Trust and agency funds, to account for assets held by the municipality as trustee or agent for individuals, private organizations or other governmental units or purposes, such as a retirement fund or a cemetery perpetual care fund;

7. Special assessment funds, to account for the financing of public improvements or services deemed to benefit properties against with special assessments are levied; a separate fund for each special improvement district established by the governing body shall be established, each of which shall be known as a special assessment fund;

8. Internal service funds, to account for the financing of goods or services provided by one department or agency of the municipality to another department or agency, or to another government, on a cost reimbursement basis;

9. A ledger or group of accounts in which to record the details relating to the general fixed assets of the municipality;

10. A ledger or group of accounts in which to record the details relating to the general bonds or other long term debt of the municipality; or

11. Such other funds or ledgers as may be established by the governing body. (Effective 10/1/79).

SECTION 17-213. CLASSIFICATION OF REVENUES AND EXPENDITURES.

Each fund shall be made up of accounts for classifying revenues and expenditures. Revenues shall be classified separately by source. Expenditures shall be departmentalized within each fund and shall be classified into at least the following accounts:

1. Personal services, which may include expenses for salaries, wages, per diem or other compensation, fees, allowances or reimbursement for travel expenses, and related employee benefits, paid to any officer or employee for services rendered or for employment. Employee benefits may include employer contributions to a retirement system, insurance, sick leave, terminal pay or similar benefits;

2. Materials and supplies, which may include articles and commodities which are consumed or materially altered when used, such as office supplies, operating supplies and repair and maintenance supplies, and all items of expense to any person, firm or corporation rendering a service in connection with repair, sale or trade of such articles or commodities;

3. Other services and charges, which may include all current expenses other than those listed in paragraphs 1, 2, 4 or 5 of this section, such as services or charges for communications, transportation, advertising, printing or binding, insurance, public utility services, repairs and maintenance, rentals, miscellaneous items and all items of expenses to any person, firm or corporation rendering such services;

4. Capital outlays, which may include outlays which result in acquisition of or additions to fixed assets which are purchased by the municipality, including machinery and equipment, furniture, land, buildings, improvements other than buildings, and all construction, reconstruction, appurtenances or improvements to real property accomplished according to the conditions of a contract; and

5. Debt service, which may include outlays in the form of debt principal payments, periodic interest payments, or related service charges for benefits received in part in prior fiscal periods as well as in current and future fiscal periods. (Effective 10/1/79)

SECTION 17-214. RESERVE.

A municipality may create an operating reserve for the purpose of providing a fund or reserve out of which to meet emergency expenditures. (Effective 10/1/79)

SECTION 17-215. FUNDS AND ACCOUNT TRANSFERS.

The chief executive officer, as authorized by the governing body, may transfer any unexpended and unencumbered appropriation or any portion thereof from one account to another within the same department or from one department to another within the same fund; except that no appropriation for debt service or other appropriation required by law or ordinance may be reduced below the minimums required. Any fund balance in an enterprise fund of the municipality may be transferred to another fund of the municipality as authorized by the governing body. Other interfund transfers may be made only as authorized by this act or as provided in the budget as adopted or amended according to Sections 17-206 or 17-216 of this title. Whenever the necessity for maintaining any special fund of a municipality has ceased to exist and a balance remains in the fund, the governing body may authorize the transfer of the balance to the general fund. Applicable law shall govern the use or transfer of balance in any debt service or special assessment fund. (Amended, effective 5/27/80).

SECTION 17-216. SUPPLEMENTAL APPROPRIATIONS - LIMITATIONS PROCEDURE.

A. The governing body may amend the budget to make supplemental appropriations to any fund up to the amount of additional revenues which are available for current expenses as shown by a fund balance for the fund due to:

1. Revenues received from sources not anticipated in the budget for that year;

2. Revenues received from anticipated sources but in excess of the budget estimates therefor; or

3. Unexpended unencumbered cash balances on hand at the end of the preceding fiscal year which had not been anticipated in the budget. Any appropriation authorizing the creating of an indebtedness shall be governed by the applicable provisions of Article 10 of the Oklahoma Constitution.

B. If at any time during the budget year it appears probable that revenues available will be insufficient to meet the amount appropriated, or that due to unforeseen emergencies there is temporarily insufficient money in a particular fund to meet the requirements of appropriation for the fund, the governing body shall take action as it deems necessary. For that purpose, it may amend the budget to reduce one or more appropriations or it may amend the budget to transfer money from one fund to another fund, but no appropriation for debt service may be reduced and no appropriation may be reduced by more than the amount of the unencumbered and unexpended balance thereof. No transfer shall be made from the debt service fund to any other fund except as may be permitted by the terms of the bond issue or applicable law.

C. A budget amendment as provided in this section authorizing supplemental appropriations or a decrease or change in appropriation or funds shall be adopted at a meeting of the governing body and filed with the municipal clerk, the county excise board of each county in which the municipality is located, and the State Auditor and Inspector. (Effective 10/1/79)

ARTICLE XXII

GENERAL POWERS OF MUNICIPALITIES

Section	
22-101	Corporate Powers of Municipalities
22-101.1	Political Activities by Municipal Employees - Exceptions - Filing As Candidate
22-101.2	Coercion Prohibited
22-101.3	Penalties
22-102	Proof of Legal Organization or Ordinances
22-103	Service of Notice or Process on Municipality
22-104	Right to Engage in Business - Public Utilities and Improvements - Eminent Domain - Issuance of Bonds - Lease of Public Utility
22-105	Condemnation of Private Property
22-106	License Tax on Occupations - Authority to Levy and Collect - Penalties
22-107	Licenses Regulated by Ordinance - Expiration - Issuance
22-107.1	Community Antenna Television Systems
22-108	Power to Suppress Gaming and Gambling
22-109	Disorderly Houses and Public Indecencies
22-110	Riots, Assaults and Disturbances - Firearms and Fireworks
22-111	Cleaning and Mowing of Property - Hearing - Costs - Lien
22-112	Condemnation of Dilapidated Buildings - Notice - Removal - Lien
22-112.1	Boarding and Securing Dilapidated Buildings - Procedure - Notice
22-113	Fire Hazards and Building Location Restrictions
22-114	Entry Upon Private Property for Surveys and Examinations - Reimbursement for Damages
22-115	Animals Running at Large - Regulation and Taxation
22-116	Jurisdiction over Public Grounds and Navigable Streams
22-117	Traffic Regulations - Control of Streets - School Zones
22-117.1	Possession of Security Verification Form may be Required for Certain Vehicles
22-118	Regulation of Taxicabs - Specific Requirements
22-119	Regulation of Railway and Freight Operations within Municipal Limits
22-120	Public Health, Hospitals and Quarantine
22-121	Nuisances
22-122	Trees
22-123	Vagrancy
22-124	Market Places - Municipal Buildings
22-125	Gifts to Institutions in State System of Higher Education
22-126	Participation in Federal Programs
22-127	Establishing Residency Requirements
22-128	Authority for Public Improvements - Borrowing Money - Bond Issues
22-129	Warrants Against Lots for Special Assessments
22-130	Reassessments for Void or Illegal Assessments
22-131	Municipal Records - Destruction, Sale or Disposition After Certain Time Limitations
22-132	Authority to Have Records Photographed or Reproduced on Film - Original Record - Storage
22-132.1	Municipal Records - Maintenance and Protection - Availability
22-133	Contesting Reasonableness of Oil and Gas Drilling Fee
22-134	Purchasing or Accounts Payable - Approved by Electronic Process

ARTICLE XXII

GENERAL POWERS OF MUNICIPALITIES

SECTION 22-101. CORPORATE POWERS OF MUNICIPALITIES

All incorporated municipalities shall be bodies corporate and politic, and shall have the powers to:

1. Sue and be sued;

2. Purchase and hold real and personal property for the use of the municipality;

3. Sell and convey any real or personal property owned by the municipality and make orders respecting the same as may be conducive to the best interests of the municipality;

4. Make all contracts and do all other acts in relation to the property and affairs of the municipality, necessary to the good government of the municipality, and to the exercise of its corporate and administrative powers; and

5. Exercise such other powers as are or may be conferred by law.

SECTION 22-101.1. POLITICAL ACTIVITIES BY MUNICIPAL EMPLOYEES - EXCEPTIONS - FILING AS CANDIDATE

Municipal employees may attend and express their views at city council meetings, or any other public meetings of municipal entities.

Any municipal employee may actively participate in partisan and nonpartisan political activities. Provided, the political activity in which the employee participates shall be exercised only during off-duty hours and while not in uniform. Any federal statutes restricting the political activities of certain municipal employees shall supersede the provisions of this section as to such employees. Municipal corporations may establish employment requirements requiring municipal employees to refrain from filing as a candidate for public office while employed by said municipality. (Amended 6/24/83)

SECTION 22-101.2. COERCION PROHIBITED

It shall be unlawful for the governing body or officer of any municipal corporation in this state to directly or indirectly coerce or attempt to coerce any municipal employee to participate or refrain from participation in municipal political activities or public meetings. (Added eff. 10/19/81).

SECTION 22-101.3. PENALTIES

Any person convicted of violating any of the provisions of this act shall be guilty of a misdemeanor. (Added eff. 10/19/81).

SECTION 22-102. PROOF OF LEGAL ORGANIZATION OR ORDINANCES

A. If a suit is instituted by a municipality, the municipality shall not be required to post bond or to show its compliance with any of the provisions of law as to its organization or publication of ordinances unless the same is controverted by affidavit.

B. A municipality shall be entitled to recover its costs and attorney fees on the same terms and in the same manner as any other party. (Amended 11/1/84)

SECTION 22-103. SERVICE OF NOTICE OR PROCESS ON MUNICIPALITY

Any notice or process affecting a municipality shall be served upon the municipal clerk, or in his or her absence then upon a deputy municipal clerk or upon the mayor. (Amended 11/1/84)

SECTION 22-104. RIGHT TO ENGAGE IN BUSINESS - PUBLIC UTILITIES AND IMPROVEMENTS - EMINENT DOMAIN - ISSUANCE OF BONDS - LEASE OF PUBLIC UTILITY

Every municipality shall have the right to:

1. Engage in any business or enterprise which may be engaged in by a person, firm or corporation by virtue of a franchise from the municipality and to do all things necessary and proper in the discretion of the governing body of the municipality pursuant to the authority granted to it by the Constitution and laws of this state to maintain said business or enterprise for the benefit of the municipality; and

2. Acquire, own, and maintain, within or without its corporate limits, real estate for sites and rights-of-way for any municipal purpose including but not limited to public utility and public park purposes, and for the location thereon of waterworks, electric light and gas plants and other facilities for generating or distributing energy, ports, airports, hospitals, quarantine stations, garbage reduction plants, pipelines for the transmission and transportation of gas, water, stormwater, and sewerage, and for any plant for the manufacture of any material for public improvement purposes and public buildings; and

3. Exercise the right of eminent domain for any municipal purpose, within or without its corporate limits, and to establish, lay, and operate any plant or pipeline upon any land or right-of-way taken pursuant to eminent domain. Any business or profession which is affected by the right of eminent domain as exercised pursuant to the provisions of this section shall be considered as a property right of the owner thereof and proper allowance therefor shall be made; and

4. Exercise the right to manufacture any material for public improvement purposes, and to barter or exchange the same for other material to be used in public improvements in the municipality, or to sell the same; and

5. Issue and sell bonds subject to and by virtue of the provisions of the Constitution of this state and in the manner and form provided by law in order to raise the monies to establish and maintain public utilities, parks and improvements; and

6. Sell or lease to any consumer or corporation, within or without its boundaries, the commodities and services supplied by such municipally owned or controlled public utility, business enterprise, or improvement and to enter into such short- or long-term contracts, agreements, and stipulations and do all things necessary and proper to further the capability of the municipality pursuant to the authority granted to it by the Oklahoma Statutes and the Constitution of this state to provide said commodities and services as may be deemed appropriate by the governing body of the municipality; and

7. Lease at a stipulated rental any public improvement or utility from any person, firm, or corporation which will contract to furnish the same. Any such rental contract shall reserve for the municipality the option to purchase the improvement or utility in the future. (Amended 11/1/87)

SECTION 22-105. CONDEMNATION OF PRIVATE PROPERTY

Private property may be taken for public use, or for the purpose of giving a right-of-way or other privilege for any necessary purpose, in the manner provided by law; but in every case the municipality shall make adequate compensation to the person or persons whose property shall be taken or injured thereby as provided by law.

SECTION 22-106. LICENSE TAX ON OCCUPATIONS - AUTHORITY TO LEVY AND COLLECT - PENALTIES

A. A municipal governing body may levy and collect a license tax on auctioneers, contractors, druggists, hawkers, peddlers, bankers, brokers, pawnbrokers, merchants of all kinds, grocers, confectioners, restaurants, butchers, taverns, public boarding houses, billiard tables, bowling alleys, and other amusement devices, drays, hacks, carriages, omnibuses, carts, wagons and other vehicles used in the municipality for pay, hay scales, lumber dealers, furniture dealers, saddle or harness dealers, stationers, jewelers, livery stable keepers, real estate agents, express companies or agencies, telegraph companies or agencies, shows, theatres, all kinds of exhibitions for pay, also photographers, photographers' agents, agents of all kinds and solicitors. The taxes so levied and collected shall be applied for the use and benefit of the municipality as the governing body may direct.

B. All scientific and literary lectures and entertainments shall be exempt from license taxation, and also all concerts and musical or other entertainments given exclusively by the citizens of the municipality.

C. The governing body may establish penalties for any failure to observe the license provisions or to pay the tax provided for by ordinance.

SECTION 22-107. LICENSES REGULATED BY ORDINANCE - EXPIRATION - ISSUANCE

Text as amended by Laws 1984, c. 102, Section 1:

A. Municipal licenses and license fees shall be regulated by ordinance. A municipality may establish such license requirements as it deems appropriate in the exercise of its police power and may provide that each applicant supply his state sales tax identification number or proof of exemption pursuant to provisions of the Sales Tax Code. Any license issued by the governing body shall expire no later than one (1) year after the date of its issuance or on April 30 of each year. No license may be issued until the amount prescribed therefor is paid to the municipal treasurer. No license in any case may be assigned or transferred. Licenses shall be signed as provided for by ordinance. The clerk shall affix the corporate seal of the municipality to the license. A municipality and the Oklahoma Tax Commission may exchange information to further the collection or enforcement of state and local taxes.

B. The municipality, its officers and employees shall preserve the confidentiality of such information in the same manner and be subject to the same penalties as provided by Section 205 of Title 68 of the Oklahoma Statutes, provided that the municipal prosecutor and other municipal enforcement personnel may receive all information necessary to enforce municipal sales tax ordinances or licensing ordinances. (Amended 4/5/84)

Text as amended by Laws 1984, c. 126, Section 41:

Municipal licenses and license fees shall be regulated by ordinance. A municipality may establish such license requirements as it deems appropriate in the exercise of its police power and may provide that each applicant supply his state sales tax identification number or proof of exemption pursuant to the provisions of Title 68 of the Oklahoma Statutes. Any license issued by the governing body shall expire no later than one (1) year after the date of its issuance or on June 30 of each year. No license may be issued until the amount prescribed therefor is paid to

the municipal treasurer. No license in any case may be assigned or transferred. Licenses shall be signed as provided for by ordinance. The clerk shall affix the corporate seal of the municipality to the license. A municipality and the Oklahoma Tax Commission may exchange information to further the collection or enforcement of state and local taxes. The municipality and the officers and employees of the municipality shall preserve the confidentiality of such information in the same manner and be subject to the same penalties as provided for by Section 205 of Title 68 of the Oklahoma Statutes, provided that the municipal prosecutor and other municipal enforcement personnel may receive all information necessary to enforce municipal sales tax ordinances or licensing ordinances. (Amended 11/1/84)

SECTION 22-107.1 COMMUNITY ANTENNA TELEVISION SYSTEMS

A. A municipality may by ordinance or otherwise issue a certificate, license or permit, for the operation of a cable television system. A municipality may establish such certificate, license or permit requirements as it deems appropriate in the exercise of its power. Any certificate, license or permit issued by the governing body shall be nonexclusive and shall not exceed a period of twenty-five (25) years and may be revocable by the governing body if said body determines that the holder of the certificate, license or permit has willfully failed or neglected to perform duties pursuant to the terms of the grant of the certificate, license or permit. A certificate, license or permit may be assigned or transferred subject to approval of the governing body of the municipality. Nothing herein shall limit the authority of a municipality to comply with state or federal law.

B. No municipality shall grant any overlapping certificate, license, permit or franchise for cable television service within its jurisdiction on terms or conditions more favorable or less burdensome than those in any existing certificate, license, permit or franchise within such municipality.

C. No municipal provisions regulating a cable television system may be adopted which are inconsistent with either state or federal law relating to cable television operations. (Amended 1988)

SECTION 22-108. POWER TO SUPPRESS GAMING AND GAMBLING

The municipal governing body may enact ordinances to restrain, prohibit, and suppress games and gambling houses, bowling alleys, pool and billiard tables, and other gambling tables. The powers granted to municipalities in this section shall not be construed to repeal any gambling law now on the statute books, but shall be cumulative only.

SECTION 22-109. DISORDERLY HOUSES AND PUBLIC INDECENCIES

The municipal governing body may enact ordinances to restrain, prohibit, and suppress houses of prostitution and other disorderly houses and practices, and all kinds of public indecencies. No municipal officer shall accept or receive any hush money, or any money or valuable things, from any person or persons engaged in any such business or practice, or grant any immunity or protection against a rigid enforcement of the laws and ordinances enacted to restrain, prohibit and suppress any such business or practice.

SECTION 22-110. RIOTS, ASSAULTS AND DISTURBANCES - FIREARMS AND FIREWORKS

The municipal governing body may regulate or prohibit riots, assaults, batteries, petty larceny, disturbances or disorderly assemblies, and immoral or indecent shows, exhibitions or concerts, in any street, house or place in the municipality; and may regulate, punish, and prevent the discharge of firearms, rockets, powder, fireworks, or other dangerously combustible material in the streets, lots, grounds, alleys or about, or in the vicinity of any buildings. The governing body may also regulate the carrying of firearms or other deadly weapons, concealed or otherwise, as provided in Section 1289.24 of Title 21 of the Oklahoma Statutes. (Amended 11/1/85)

SECTION 22-111. CLEANING AND MOWING OF PROPERTY - HEARING - COSTS - LIEN

A. A municipal governing body may cause property within the municipal limits to be cleaned of trash and weeds or grass to be cut or mowed in accordance with the following procedure:

1. At least ten (10) days' notice shall be given to the owner of the property by mail at the address shown by the current year's tax rolls in the county treasurer's office before the governing body holds a hearing or takes action. The notice shall order the property owner to clean the property of trash, or to cut or mow the weeds or grass on the property, as appropriate, and said notice shall further state that unless such work is performed within ten (10) days of the date of the notice the work shall be done by the municipality and a notice of lien shall be filed with the county clerk against the property for the costs due and owing the municipality. At the time of mailing of notice to the property owner, the municipality shall obtain a receipt of mailing from the postal service, which receipt shall indicate the date of mailing and the name and address of the mailee. However, if the property owner cannot be located within ten (10) days from the date of mailing by the municipal governing body, notice may be given by posting a copy of the notice on the property or by publication, as defined in Section 1-102 of this title, one

time not less than ten (10) days prior to any hearing or action by the municipality. If a municipal governing body anticipates summary abatement of a nuisance in accordance with the provisions of subsection B of this section, the notice, whether by certified mail, posting or publication, shall state: that any accumulations of trash or excessive weed or grass growth on the owner's property occurring within six (6) months after the removal of trash or cutting or mowing of weeds or grass on the property pursuant to such notice may be summarily abated by the municipal governing body; that the costs of such abatement shall be assessed against the owner; and that a lien may be imposed on the property to secure such payment, all without further prior notice to the property owner;

2. The owner of the property may give his written consent to the municipality authorizing the removal of the trash or the mowing of the weeds or grass. By giving said written consent, the owner waives his right to a hearing by the municipality;

3. A hearing may be held by the municipal governing body to determine whether the accumulation of trash or the growth of weeds or grass has caused the property to become detrimental to the health, benefit, and welfare of the public and the community or a hazard to traffic, or creates a fire hazard to the danger of property;

4. Upon a finding that the condition of the property constitutes a detriment or hazard, and that the property would be benefited by the removal of such conditions, the agents of the municipality are granted the right of entry on the property for the removal of trash, mowing of weeds or grass, and performance of the necessary duties as a governmental function of the municipality. Immediately following the cleaning or mowing of the property, the municipal clerk shall file a notice of lien with the county clerk describing the property and the work performed by the municipality, and stating that the municipality claims a lien on said property for the cleaning or mowing costs;

5. The governing body shall determine the actual cost of such cleaning and mowing and any other expenses as may be necessary in connection therewith, including the cost of notice and mailing. The municipal clerk shall forward by mail to the property owner specified in paragraph 1 of this subsection a statement of such actual cost and demanding payment. If the cleaning and mowing are done by the municipality, the cost to the property owner for said cleaning and mowing shall not exceed the actual cost of the labor, maintenance, and equipment required. If the cleaning and mowing are done on a private contract basis, the contract shall be awarded to the lowest and best bidder;

6. If payment is not made within thirty (30) days from the date of the mailing of the statement, the municipal clerk shall forward a certified statement of the amount of the cost to the county treasurer of the county in which the property is located and the same shall be levied on the property and collected by the county treasurer as other taxes authorized by law. Until fully paid, the cost and the interest thereon shall be the personal obligation of the property owner from and after the date the cost is certified to the county treasurer. In addition the cost and the interest thereon shall be a lien against the property from the date the cost is certified to the county treasurer, coequal with the lien of ad valorem taxes and all other taxes and special assessments and prior and superior to all other titles and liens against the property, and the lien shall continue until the cost shall be fully paid. At the time of collection, the county treasurer shall collect a fee of Five Dollars ($5.00) for each parcel of property. Said fee shall be deposited to the credit of the general fund of the county. At any time prior to the collection as provided in this paragraph, the municipality may pursue any civil remedy for collection of the amount owing and interest thereon including an action in personam against the owner and an action in rem to foreclose its lien against the property. A mineral interest, if severed from the surface interest and not owned by the surface owner, shall not be subject to any tax or judgment lien created pursuant to this section. Upon receiving payment, if any, the municipal clerk shall forward to the county treasurer a notice of such payment and directing discharge of the lien; and

7. The municipality may designate by ordinance an administrative officer or administrative body to carry out the duties of the governing body in subsection A of this section. The property owner shall have a right of appeal to the municipal governing body from any order of the administrative officer or administrative body. Such appeal shall be taken by filing written notice of appeal with the municipal clerk within ten (10) days after the administrative order is rendered.

B. If a municipal governing body causes property within the municipal limits to be cleaned of trash and weeds or grass to be cut or mowed in accordance with the procedures provided for in subsection A of this section, any subsequent accumulations of trash or excessive weed or grass growth on the property occurring within a six-month period may be declared to be a nuisance and may be summarily abated without further prior notice to the property owner. At the time of each such summary abatement the municipality shall notify the property owner of the abatement and the costs thereof. The notice shall state that the property owner may request a hearing within ten (10) days after the date of mailing the notice. The notice and hearing shall be as provided for in subsection A of this section. Unless otherwise determined at the hearing the cost of such abatement shall be determined and collected as provided for in paragraphs 5 and 6 of subsection A of this section. Provided, however, that this subsection shall not apply if the records of the county clerk show that the property was transferred after notice was given pursuant to subsection A of this section.

C. The municipal governing body may enact ordinances to prohibit owners of property or persons otherwise in possession or control located within the municipal limits from allowing trash to accumulate, or weeds to grow or stand upon the premises and may impose penalties for violation of said ordinances.

D. As used in this section:

1. "Weed" includes but is not limited to poison ivy, poison oak, or poison sumac and all vegetation at any state of maturity which:

a. exceeds twelve (12) inches in height, except healthy trees, shrubs, or produce for human consumption grown in a tended and cultivated garden unless such trees and shrubbery by their density or location constitute a detriment to the health, benefit and welfare of the public and community or a hazard to traffic or create a fire hazard to the property or otherwise interfere with the mowing of said weeds;

b. regardless of height, harbors, conceals, or invites deposits or accumulation of refuse or trash;

c. harbors rodents or vermin;

d. gives off unpleasant or noxious odors;

e. constitutes a fire or traffic hazard; or

f. is dead or diseased.

The term "weed" shall not include tended crops on land zoned for agricultural use which are planted more than one hundred fifty (150) feet from a parcel zoned for other than agricultural use.

2. "Trash" means any refuse, litter, ashes, leaves, debris, paper, combustible materials, rubbish, offal, or waste, or matter of any kind or form which is uncared for, discarded, or abandoned.

3. "Owner" means the owner of record as shown by the most current tax rolls of the county treasurer.

4. "Cleaning" means the removal of trash from property.

E. The provisions of this section shall not apply to any property zoned and used for agricultural purposes. (Amended 1990)

SECTION 22-112. CONDEMNATION OF DILAPIDATED BUILDINGS - NOTICE - REMOVAL - LIEN

A municipal governing body may cause dilapidated buildings within the municipal limits to be torn down and removed in accordance with the provisions of this section:

1. At least ten (10) days' notice that a building is to be torn down or removed shall be given to the owner of the property before the governing body holds a hearing. A copy of the notice shall be posted on the property to be affected. In addition, a copy of said notice shall be sent by mail to the property owner at the address shown by the current year's tax rolls in the office of the county treasurer. Written notice shall also be mailed to any mortgage holder as shown by the records in the office of the county clerk to the last-known address of the mortgagee. At the time of mailing of notice to any property owner or mortgage holder, the municipality shall obtain a receipt of mailing from the postal service, which receipt shall indicate the date of mailing and the name and address of the mailee. However, if neither the property owner nor mortgage holder can be located, notice may be given by posting a copy of the notice on the property, or by publication, as defined in Section 1-102 of this title. Such notice may be published once not less than ten (10) days prior to any hearing or action by the municipality pursuant to the provisions of this section.

2. A hearing shall be held by the governing body to determine if the property is dilapidated and has become detrimental to the health, safety, or welfare of the general public and the community, or if said property creates a fire hazard which is dangerous to other property.

3. Pursuant to a finding that the condition of the property constitutes a detriment or a hazard, and that the property would be benefited by the removal of such conditions, the governing body may cause the dilapidated building to be torn down and removed. The governing body shall fix reasonable dates for the commencement and completion of the work. The municipal clerk shall immediately file a notice of dilapidation and lien with the county clerk describing the property, the findings of the municipality at the hearing, and stating that the municipality claims a lien on said property for the destruction and removal costs and that such costs are the personal obligation of the property owner from and after the date of filing of said notice. The agents of the municipality are granted the right of entry on the property for the performance of the necessary duties as a governmental function of the municipality if the work is not performed by the property owner within dates fixed by the governing body.

4. The governing body shall determine the actual cost of the dismantling and removal of dilapidated buildings and any other expenses that may be necessary in conjunction with the dismantling and removal of the buildings, including the cost of notice and mailing. The municipal clerk shall forward a statement of such actual cost attributable to the dismantling and removal of the buildings and a demand for payment of such costs by mail

to the property owner. In addition, a copy of said statement shall be mailed to any mortgage holder at the address provided for in paragraph 1 of this section. At the time of mailing of the statement of costs to any property owner or mortgage holder, the municipality shall obtain a receipt of mailing from the postal service, which receipt shall indicate the date of mailing and the name and address of the mailee. If a municipality dismantles or removes any dilapidated buildings, the cost to the property owner shall not exceed the actual cost of the labor, maintenance and equipment required for dismantling and removal of the dilapidated buildings. If dismantling and removal of dilapidated buildings is done on a private contract basis, the contract shall be awarded to the lowest and best bidder.

5. When payment is made to the municipality for costs incurred, the municipal clerk shall file a release of lien, but if payment attributable to the actual cost of the dismantling and removal of the buildings is not made within six (6) months from the date of the mailing of the statement to the owner of such property, the municipal clerk shall forward a certified statement of the amount of the cost to the county treasurer of the county in which the property is located. Said costs shall be levied on the property and collected by the county treasurer as are other taxes authorized by law. Until finally paid, the costs and the interest thereon shall be the personal obligation of the property owner from and after the date of the notice of dilapidation and lien is filed with the county clerk. In addition the cost and the interest thereon shall be a lien against the property from the date the notice of the lien is filed with the county clerk. Said lien shall be coequal with the lien of ad valorem taxes and all other taxes and special assessments and shall be prior and superior to all other titles and liens against the property. The lien shall continue until the cost is fully paid. At the time of collection, the county treasurer shall collect a fee of Five Dollars ($5.00) for each parcel of property. Said fee shall be deposited to the credit of the general fund of the county. At any time prior to collection as provided for in this paragraph, the municipality may pursue any civil remedy for collection of the amount owing and interest thereon including an action in personam against the property owner and an action in rem to foreclose its lien against the property. A mineral interest, if severed from the surface interest and not owned by the surface owner, shall not be subject to any tax or judgment lien created pursuant to this section. Upon receiving payment, the municipal clerk shall forward to the county treasurer a notice of such payment and shall direct discharge of the lien.

6. The municipality may designate, by ordinance, an administrative officer or administrative body to carry out the duties of the governing body specified in this section. The property owner shall have the right of appeal to the municipal governing body from any order of the administrative officer or administrative body. Such appeal shall be taken by filing written notice of appeal with the municipal clerk within ten (10) days after the administrative order is rendered.

7. For the purposes of this section, "dilapidated building" means a structure which through neglect or injury lacks necessary repairs or otherwise is in a state of decay or partial ruin to such an extent that said structure is a hazard to the health, safety, or welfare of the general public. "Owner" means the owner of record as shown by the most current tax rolls of the county treasurer.

8. Nothing in the provisions of this section shall prevent the municipality from abating a dilapidated building as a nuisance or otherwise exercising its police power to protect the health, safety, or welfare of the general public.

9. The officers, employees or agents of the municipality shall not be liable for any damages or loss of property due to the removal of dilapidated buildings performed pursuant to the provisions of this section or as otherwise prescribed by law.

10. The provisions of this act shall not apply to any property zoned and used for agricultural purposes.

(Amended 1990)

SECTION 22-112.1 BOARDING AND SECURING DILAPIDATED BUILDINGS - PROCEDURE - NOTICE

A. After a building has been declared dilapidated, as provided in Section 22-112 of this title, and before the commencement of the tearing and removal of a dilapidated building, the governing body may cause such a building to be boarded and secured.

B. A governing body of any municipality may cause the premises on which an unsecured building is located to be cleaned of trash and weeds in accordance with the provisions of Section 22-111 of this title.

C. A governing body of any municipality may cause an unsecured building to be boarded and secured in accordance with the following procedures:

1. Before the governing body orders such action, at least ten (10) days' notice that such unsecured building is to be boarded and secured shall be given by mail to any property owners and mortgage holders as provided in Section 22-112 of this title. At the time of mailing of notice to any property owner or mortgage holder, the municipality shall obtain a receipt of mailing from the postal service, which receipt shall indicate the date of mailing and the name and address of the mailee. A copy of the notice shall also be posted on the property to be affected. However, if neither the property owner nor mortgage holder can be located, notice may be given by posting a copy of the notice on the property or by publication, as defined in Section 1-102 of this title. Such notice

shall be published one time, not less than ten (10) days prior to any hearing or action by the municipality pursuant to the provisions of this section. If a municipal governing body anticipates summary abatement of a nuisance in accordance with the provisions of paragraph 9 of subsection C of this section, the notice shall state; that any subsequent need for boarding and securing the building within a six-month period after the initial boarding and securing of the building pursuant to such notice may be summarily boarded and secured by the municipal governing body; that the costs of such boarding and securing shall be assessed against the owner; and that a lien may be imposed on the property to secure such payment, all without further prior notice to the property owner or mortgage holder;

2. The owner of the property may give his written consent to the municipality authorizing the boarding and securing of such unsecured building and to the payment of any costs incurred thereby. By giving said written consent, the owner waives his right to a hearing by the municipal governing body;

3. If the property owner does not give his written consent to such actions, a hearing may be held by the municipal governing body to determine whether the boarding and securing of such unsecured building would promote and benefit the public health, safety or welfare. Such hearing may be held in conjunction with a hearing on the accumulation of trash or the growth of weeds or grass on the premises of such unsecured building held pursuant to the provisions of paragraph 3 of subsection A of Section 22-111 of this title. In making such determination, the governing body shall apply the following standard: the governing body may order the boarding and securing of the unsecured building when the boarding and securing thereof would make such building less available for transient occupation, decrease a fire hazard created by such building, or decrease the hazard that such building would constitute an attractive nuisance to children.

Upon making such a determination, the municipal governing body may order the boarding and securing of the unsecured building;

4. After the governing body orders the boarding and securing of such unsecured building, the municipal clerk shall immediately file a notice of unsecured building and lien with the county clerk describing the property, stating the findings of the municipality at the hearing at which such building was determined to be unsecured, and stating that the municipality claims a lien on said property for the costs of boarding and securing the building and that such costs are the personal obligation of the property owner from and after the date of filing said notice;

5. Pursuant to the order of the governing body, the agents of the municipality are granted the right of entry on the property for the performance of the boarding and securing of such building and for the performance of all necessary duties as a governmental function of the municipality;

6. After an unsecured building has been boarded and secured, the governing body shall determine the actual costs of such actions and any other expenses that may be necessary in conjunction therewith including the cost of the notice and mailing. The municipal clerk shall forward a statement of the actual costs attributable to the boarding and securing of the unsecured building and a demand for payment of such costs, by mail to any property owners and mortgage holders as provided in Section 22-112 of this title. At the time of mailing of the statement of costs to any property owner or mortgage holder, the municipality shall obtain a receipt of mailing from the postal service, which receipt shall indicate the date of mailing and the name and address of the mailee.

If a municipality boards and secures any unsecured building, the cost to the property owner shall not exceed the actual cost of the labor, materials and equipment required for the performance of such actions. If such actions are done on a private contract basis, the contract shall be awarded to the lowest and best bidder;

7. When payment is made to the municipality for costs incurred, the municipal clerk shall file a release of lien, but if payment attributable to the actual costs of the boarding and securing of the unsecured building is not made within thirty (30) days from the date of the mailing of the statement to the owner of such property, the municipal clerk shall forward a certified statement of the amount of the costs to the county treasurer of the county in which the property is located. Said costs shall be levied on the property and collected by the county treasurer as are other taxes authorized by law. Until fully paid, the costs and the interest thereon shall be the personal obligation of the property owner from and after the date the notice of unsecured building and lien is filed with the county clerk. In addition the costs and the interest thereon shall be a lien against the property from the date the notice of the lien is filed with the county clerk. Said lien shall be coequal with the lien of ad valorem taxes and all other taxes and special assessments and shall be prior and superior to all other titles and liens against the property. The lien shall continue until the costs and interest are fully paid. At any time prior to collection as provided for in this paragraph, the municipality may pursue any civil remedy for collection of the amount owing and interest thereon including an action in personam against the property owner and an action in rem to foreclose its lien against the property. A mineral interest if severed from the surface owner, shall not be subject to any tax or judgment lien created pursuant to this section. Upon receiving payment, the municipal clerk shall forward to the county treasurer a notice of such payment and shall direct discharge of the lien;

8. The municipality may designate by ordinance an administrative officer or administrative body to carry out the duties of the governing body specified in subsection C of this section. The property owner or mortgage holder shall have a right of appeal to the municipal governing body from any order of the administrative officer or administrative body. Such appeal shall be taken by filing written notice of appeal with the municipal clerk within ten (10) days after the administrative order is rendered;

9. If a municipal governing body causes a structure within the municipal limits to be boarded and secured, any subsequent need for boarding and securing within a six-month period constitutes a public nuisance and may be summarily boarded and secured without further prior notice to the property owner or mortgage holder. At the time of each such summary boarding and securing, the municipality shall notify the property owner and mortgage holder of the boarding and securing and the costs thereof. The notice shall state that the property owner may request an appeal with the municipal clerk within ten (10) days after the mailing of the notice. The notice and hearing shall be as provided for in paragraph 1 of subsection C of this section. Unless otherwise determined at the hearing the cost of such boarding and securing shall be determined and collected as provided for in paragraphs 6 and 7 of this subsection;

10. A governing body of any municipality may determine that a building is unsecured and order that such building be boarded and secured in the manner provided for in this subsection even though such building has not been declared, by the governing body, to be dilapidated; and

11. For the purposes of this section:

a. "boarding and securing" or "boarded and secured" means the closing, boarding or locking of any or all exterior openings so as to prevent entry into the structure; and

b. "unsecured building" shall mean any structure which is not occupied by a legal or equitable owner thereof, or by a lessee of a legal or equitable owner, and into which there are one or more unsecured openings such as broken windows, unlocked windows, broken doors, unlocked doors, holes in exterior walls, holes in the roof, broken basement or cellar hatchways, unlocked basement or cellar hatchways or other similar unsecured openings which would facilitate an unauthorized entry into the structure.

D. The provisions of this section shall not apply to any property zoned and used for agricultural purposes. (Amended 1990)

SECTION 22-113. FIRE HAZARDS AND BUILDING LOCATION RESTRICTIONS

The municipal governing body may regulate the construction or suppression, and cleaning of any apparatus, fixtures, or equipment used in any building, manufactory, or business which may cause or promote fires, may prescribe limits within which dangerous or hazardous businesses may be carried on and may adopt fire prevention codes and regulations. The governing body may impose penalties for the violation of such ordinances and may remove or abate any buildings constructed or located in violation of its ordinances. (Amended 11/1/84)

SECTION 22-114. ENTRY UPON PRIVATE PROPERTY FOR SURVEYS AND EXAMINATIONS - REIMBURSEMENT FOR DAMAGES

A. Municipalities through their authorized agents or employees may enter upon any lands, waters, or premises for the purpose of making surveys, soundings, or examinations as may be necessary for the purpose of establishing, locating, relocating, constructing, or maintaining any sewer, waterworks, drain, or public works or facilities. Entry may also be made for the purpose of terminating any public utility services if the municipality determines the existence of a hazard to the health, safety, or welfare of the general public in connection with said services. Said entry shall not be deemed a trespass, nor shall an entry pursuant to any condemnation proceedings which may be pending be deemed a trespass. If the municipality does not have written consent for entry from the owner and lessee, the municipality shall give notice to the owner and lessee of the property to be entered, by certified mail at least fourteen (14) days prior to any entry. If the owner and lessee are unable to be given notice by certified mail, notice shall be given by publication.

B. Municipalities shall make reimbursement for any actual damages to lands, water, or premises as a result of the entry onto property as authorized in this section. If there is a disagreement as to the amount of any damage, either the person incurring any damage to land, water, or premises or the municipality may file a petition with the district court in the county where the alleged damage occurred requesting the appointment of a commissioner to appraise the damage and proceed to have the damage determined as in condemnation proceedings. (Amended 11/1/84)

SECTION 22-115. ANIMALS RUNNING AT LARGE - REGULATION AND TAXATION

The municipal governing body may regulate or prohibit animals from running at large. Animals which are running at large may be impounded and sold to discharge any costs and penalties established by the governing body and the expense of impounding, keeping or sale of such animals. The governing body may also provide for the erection of pens, pounds, and buildings for the use of the municipality, within or without the municipal limits, and appoint and compensate keepers thereof, and establish and enforce rules governing the pens, pounds or buildings. The governing body may also regulate and provide for taxing the owners and harborers of dogs, and authorize the killing of dogs which are found at large in violation of any ordinance regulating the same.

SECTION 22-116. JURISDICTION OVER PUBLIC GROUNDS AND NAVIGABLE STREAMS

The municipality shall have jurisdiction over any real property within or without its corporate limits belonging to the municipality. Unless otherwise provided for by law, the municipality may regulate the banks, shores, and wharves of navigable streams within the corporate limits. (Amended 11/1/84)

SECTION 22-117. TRAFFIC REGULATIONS - CONTROL OF STREETS - SCHOOL ZONES

A. The municipal governing body may establish ordinances and regulations governing the operation of motor vehicles and traffic upon the roads and streets within the municipality in the manner provided by, and not inconsistent with, state law. The governing body may also regulate and prevent racing and fast driving, and all games, practices or amusements likely to result in damage to any person or property, in the streets, highways, alleys, bridges, sidewalks or other places in the municipality, and riding or driving over or upon the sidewalks of the municipality.

B. Any municipal governing body which establishes ordinances and regulations governing school zone speed limits, shall place school zone signs designating the beginning and end of the zone on the side or in the center of the roadway. Such end zone signing shall be as follows:

(a) On roadways of two driving lanes, only the end zone signing may be on either side of the roadway or in the center of the roadway.

(b) On roadways in excess of two driving lanes, the end zone signing shall be on the right side of the roadway or in the center of the roadway if said roadway is divided by a median.

SECTION 22-117.1 POSSESSION OF SECURITY VERIFICATION FORM MAY BE REQUIRED FOR CERTAIN VEHICLES

Pursuant to Section 22-117 of this title, a municipality may by ordinance require the operator of any motor vehicle registered in this state to carry a current security verification form as defined in Article VI, Chapter 7 of Title 47 of the Oklahoma Statutes or equivalent form which has been issued by the Department.

Any person producing proof that a current security verification form or equivalent form which has been issued by the Department was in force for such person at the time of the alleged offense shall be entitled to dismissal of such charge upon payment of court costs; however, if proof of security verification is presented to the court within forty-eight (48) hours after the violation, the charge shall be dismissed without payment of court costs.

Upon conviction, bond forfeiture or deferral of sentence, the court shall forward an abstract to the Department of Public Safety within ten (10) days reflecting the action taken by the court. (Amended 11/1/84)

SECTION 22-118. REGULATION OF TAXICABS - SPECIFIC REQUIREMENTS

The municipal governing body is vested with full police powers, for the purpose of preserving public health, safety and welfare, over the operation, regulation and control of taxicabs within the limits of the municipality. The municipal governing body may prescribe regulations for the operation of taxicabs, which regulations may include, and shall be limited to the following specific powers and subjects:

1. Requirement of minimum insurance, bond or other indemnity for public liability upon each taxicab; and if other than standard insurance be permitted, requirement and specifications of terms and conditions under which such other indemnity shall be accumulated, held, maintained, managed, and disposed of to secure persons in whose favor any liability shall arise out of the operation of taxicabs;

2. Requirement of minimum standards of mechanical condition and efficiency of any vehicle used as a taxicab, together with the power to require inspections to insure compliance therewith;

3. Restriction of the loading of taxicabs to specified zones or localities; including the power to prohibit punish "cruising" and the making of such other rules governing the manner of operation of taxicabs as the public safety may require;

4. Determination, establishment, and enforcement of maximum and/or minimum rates and charges to be made by taxicabs for the transportation of passengers; including, but not requiring, the establishment of zones as the basis of such rates, or the requirement of taximeters as the basis of calculating such charges;

5. Requirement of municipal license for the operation of each taxicab; together with the right to levy and exact an annual fee therefor, and the right to revoke, cancel and thereafter refuse to reissue such license for failure to comply with or for infractions of regulations promulgated pursuant to this section. The granting of any license may be made dependent upon the holding of a certificate of convenience and necessity issued by the municipality, if such certificates are provided as authorized by paragraph 6 of this section; and

6. Requirement for the holding of a certificate of convenience and necessity as a condition precedent to the issuance and holding of a municipal license for the operation of a taxicab; including the power to issue, deny, suspend and revoke such certificates.

SECTION 22-119. REGULATION OF RAILWAY AND FREIGHT OPERATIONS WITHIN MUNICIPAL LIMITS

The municipal governing body may regulate levees, depots, depot grounds, and places of storing freight and goods, and provide for the passage of railways through the streets and public grounds of the municipality. The governing body may also regulate the crossing of railway tracks and the running of railway engines, cars and trucks within the limits of the municipality, and to govern the speed thereof, and to make provisions, rules and restrictions to prevent accidents at crossings and on the tracks of railways and to prevent fires from engines.

SECTION 22-120. PUBLIC HEALTH, HOSPITALS AND QUARANTINE

The municipal governing body may enact and enforce such ordinances, rules and regulations as it deems necessary for the protection of the public health, not inconsistent with state law; and may establish and regulate hospitals, and provide for their operation and support. The governing body may make regulations to prevent the introduction of contagious diseases into the municipality and may enforce quarantine laws within five (5) miles of the municipal limits.

SECTION 22-121. NUISANCES

The municipal governing body may declare what shall constitute a nuisance, and provide for the prevention, removal and abatement of nuisances.

SECTION 22-122. TREES

The municipal governing body may enact ordinances for the purpose of regulating, planting and maintaining trees in the streets, avenues or public grounds of the municipality. Planting and maintaining trees may also be petitioned for in the manner provided for petitioning sidewalks; and the governing body may make assessments and collect taxes in order to pay for planting and maintaining trees in the manner provided for sidewalk assessments and taxes.

SECTION 22-123. VAGRANCY

The municipal governing body may provide by ordinance for the arrest, fine, and imprisonment of vagrants.

SECTION 22-124. MARKET PLACES - MUNICIPAL BUILDINGS

The municipal governing body may purchase ground for, erect, establish, operate, and regulate retail or commercial redevelopment projects, market houses, and marketplaces. The governing body may contract with any person, company, or corporation for the erection, operation, and maintenance of such redevelopment projects, market houses, and marketplaces on terms and conditions and in such manner as may be necessary and proper pursuant to the authority granted to it by the Constitution and laws of this state to protect and preserve such projects and markets for the benefit of the municipality and its citizens. The municipal governing body may raise all necessary revenue therefor. The governing body may also provide for the erection and operation of any and all necessary buildings for the municipality. (Amended 11/1/84)

SECTION 22-125. GIFTS TO INSTITUTIONS IN STATE SYSTEM OF HIGHER EDUCATION

The municipal governing body may make gifts of any real estate belonging to the municipality to any institution in the Oklahoma State System of Higher Education which is located in the municipality. The municipal governing body may purchase or otherwise acquire real estate for this purpose, execute any instruments necessary for the transfer of real estate, and may give buildings or monies for the construction of buildings to institutions in the state system of higher education. The governing boards of such institutions are hereby authorized to accept these gifts.

SECTION 22-126. PARTICIPATION IN FEDERAL PROGRAMS

The municipal governing body may receive funds for and participate in any federal program, and may cooperate with the United States Government and any agency or instrumentality thereof, in the manner authorized and provided by federal law and regulation. In doing so, a municipality may perform all necessary functions and take all necessary actions for accomplishing such federal purposes and programs, as agent of the federal government, notwithstanding any provisions of state law.

SECTION 22-127. ESTABLISHING RESIDENCY REQUIREMENTS

The municipal governing body by ordinance may designate which appointed officers and employees shall reside within the municipality; but police officers, firefighters and other municipal employees need not be actual residents of the municipality where they are employed in municipalities of five thousand (5,000) population or more, according to the latest federal census.

SECTION 22-128. AUTHORITY FOR PUBLIC IMPROVEMENTS - BORROWING MONEY - BOND ISSUES

The governing body may provide for making any and all improvements of a general nature in the municipality and may from time to time borrow money and issue bonds for the purpose of paying for such improvements. No such money shall be borrowed or bonds issued until the governing body is instructed to do so by a vote of at least three-fifths of the registered voters voting on the question at any election held in the municipality, unless otherwise provided by the Constitution and laws of Oklahoma. Bonds issued under this section shall be payable not more than twenty-five (25) years from the date of their issue, with interest thereon at a rate not exceeding a maximum rate established by law. The governing body shall provide for taxes to pay the bonds at their maturity, and their interest coupons as they respectively become due. (Amended 7/1/83)

SECTION 22-129. WARRANTS AGAINST LOTS FOR SPECIAL ASSESSMENTS

Where municipal improvements of any character are made by special assessments upon the abutting lots, or upon blocks, or where a special assessment may be created by ordinance for the direct benefit of a limited locality in a municipality, the governing body may issue a tax warrant against each separate abutting lot, in the manner provided by law, which shall be a valid lien on the lot and shall be extended, collected and bear a like penalty with other taxes of the state, county or municipality.

SECTION 22-130. REASSESSMENTS FOR VOID OR ILLEGAL ASSESSMENTS

When a municipal governing body has attempted to levy any assessment for improvements which may have been informal, illegal or void for want of sufficient authority or other cause, the governing body of the municipality shall reassess any such assessment in the manner provided by law.

SECTION 22-131. MUNICIPAL RECORDS - DESTRUCTION, SALE OR DISPOSITION AFTER CERTAIN TIME LIMITATIONS

A municipal governing body may destroy, sell for salvage or otherwise dispose of the following papers, documents and records after the expiration of the specified period of time following the end of the fiscal year in which the paper, document or record was created, except as otherwise specified:

1. One (1) year: parking citations may be destroyed or otherwise permanently disposed of one (1) year after the date of issuances;

2. Two (2) years: municipal court warrants, water, sewer, garbage and utility receipts and statements, which have been previously audited; inspection records relating to water meters and sewer inspections; miscellaneous petitions and letters addressed to the governing body on matters other than pertaining to the items hereinafter set forth; utility billing ledger or register; utility cash receipts ledger or register; and utility accounts receivable ledger or register. Fire run contracts may be destroyed or otherwise disposed of two (2) years after their expiration;

3. Five (5) years: successful and unsuccessful bids for the purchase or furnishing of equipment, material and improvements; inspection records except as provided for in paragraph 2 of this section; claims that have been denied; license applications; bonds; special, primary and general election payrolls; election tabulations and returns; withholding statements; garnishment records; traffic tickets and receipts; bond receipts and fine receipts; information and complaints; court dockets; paid general obligation and

revenue bonds; paid street improvement, sewer and sidewalk district bonds; warrants; claims; checks; vouchers; purchase orders; payrolls;

4. Ten (10) years: inventories; appropriation ledgers; sidewalk assessment records, except payment records; cash receipt book or register for the general fund, the street and alley fund, any bond fund or sinking fund, and all other trust funds that have been audited; and

5. Fifteen (15) years: sewer and improvement district records, except payment records.

None of the above-mentioned records, papers or documents pertaining to pending litigation shall be disposed of until such litigation is finally terminated. This section shall not be construed to authorize or allow the destruction of any testing laboratory results or the inspection records of public improvements of a municipality. (Amended 1990)

SECTION 22-132. AUTHORITY TO HAVE RECORDS PHOTOGRAPHED OR REPRODUCED ON FILM -ORIGINAL RECORD - STORAGE

A. The head of any municipal department, commission, bureau or board may have any or all records kept by the official, department, commission, bureau or board photographed, microphotographed, photostated, reproduced on film or stored on optical disk. Such film or reproducing material shall be of durable material and the device used to reproduce such records on film or other material shall be such as to accurately reproduce and perpetuate the original records in all details.

B. The photostatic copy, photograph, microphotograph, photographic film or optical disk of the original records shall be deemed to be an original record for all purposes, and shall be admissible in evidence in all courts or administrative agencies. A facsimile, exemplification or certified copy thereof shall, for all purposes recited herein, be deemed to be a transcript, exemplification or certified copy of the original.

C. Whenever photostatic copies, photographs, microphotographs, reproductions on films or optical disks shall be placed in conveniently accessible files and provisions made for preserving, examining and using same, the head of any municipal department, commission, bureau or board may certify those facts to the municipal governing body. The governing body may, by ordinance or resolution, authorize the disposal, archival storage or destruction of such records and papers. (Amended 1990)

SECTION 22-132.1. MUNICIPAL RECORDS - MAINTENANCE AND PROTECTION - AVAILABILITY

Any officer or employee of a municipality having custody of records or other documents of the municipality shall keep and maintain such records in a manner and at a location prescribed by the governing body. Such records shall be available for use by officers and employees of the municipality as the governing body shall direct. The governing body shall establish policies and procedures to preserve and protect the records of the municipality consistent with other provisions of law providing for the confidentiality of such records where appropriate and the accessibility of such records for inspection by the public. (Added 1989)

SECTION 22-133. CONTESTING REASONABLENESS OF OIL AND GAS DRILLING FEE

Any person, firm or corporation may contest the reasonableness of any fee imposed pursuant to the provisions of Section 52 of Title 17 of the Oklahoma Statutes, for the issuance of a permit for the drilling and operation of an oil and gas well or the regulation thereof, by filing a petition in the district court of the county where the governing body of such incorporated city or town is located. The court, upon hearing all the facts and circumstances relating to the imposition of the fee, shall determine the reasonableness of such fee. The court may award attorneys' fees and costs to the prevailing party. (Added 1986)

SECTION 22-134. PURCHASING OR ACCOUNTS PAYABLE - APPROVAL BY ELECTRONIC PROCESS

Notwithstanding any other provisions of the Oklahoma Statutes, any municipal document, other than checks, drafts or warrants, relating to purchasing or accounts payable may be approved by the municipality by an electronic process in lieu of a manual process. (Added 1990)

ARTICLE XXVII

COURTS

Section	
27-101	Creation of Municipal Court not of Record
27-102	Resolution of Governing Body
27-103	Jurisdiction
27-104	Judges
27-105	Prohibition on Change of Venue - Disqualification of Judge
27-106	Acting Judge - Alternate Judge - Compensation
27-107	Vacancies in Office of Judge
27-108	Municipal Attorney as Prosecuting Officer
27-109	Clerk of Court - Duties
27-110	Court Marshal - Duties
27-111	Bond of Clerk and Judge - Form
27-112	Fees, Fines and Forfeitures - Dispositions
27-113	Procedure - Judicial Notice of Statutes and Ordinances - Writs and Process
27-114	Rules for Conduct of Court Business
27-115	Prosecutions by Verified Complaint - Style
27-116	Arraignment - Fines in Lieu of Appearance
27-117	Bail - Release on own Recognizance - Traffic Citation
27-118	Failure to Appear According to Terms of Bond - Forfeiture
27-119	Jury Trials - Qualifications of Jurors
27-120	Selection and Summons of Jurors
27-121	Fees and Mileage of Jurors and Witnesses
27-122	Enforcement of Payment of Fines or Costs by Imprisonment - Persons Unable to Pay
27-122.1	Municipal Courts - Sentences - Costs
27-122.2	Community Service in Lieu of Fine or in Conjunction with Imprisonment - Violation of Community Service Conditions
27-123	Suspension of Judgment or Costs - Reconfinement
27-124	Supervision of Juveniles on Parole or Probation
27-125	Contempt of Court
27-126	Costs
27-127	Prosecution for Same Offense of Another Court Prohibited
27-128	Writs of Mandamus, Prohibition and Certiorari
27-129	Appeals
27-130	District Attorney to Defend Appeals in Certain Cases
27-131	Orders Relative to Procedures and Practices by Supreme Court
27-132	Appeals From District Court

ARTICLE XXVII

COURTS

SECTION 27-101. CREATION OF MUNICIPAL COURT NOT OF RECORD

A municipality may create a Municipal Court, as provided in this article, which shall be a court not of record. This court may be created in addition to a Municipal Criminal Court of Record. References in Sections 27-101 through 27-131 of this title to the municipal court shall mean the municipal court not of record established under the authority of the provisions of this article.

SECTION 27-102. RESOLUTION OF GOVERNING BODY

Before a municipal court not of record may be put into operation, the municipal governing body shall determine by resolution that the efficient disposition of cases involving the violation of municipal ordinances necessitates putting the court into operation. The governing body shall cause a certified copy of the resolution to be filed in the office of the county clerk of each county in which the municipality is located. The resolution and the filing thereof shall be judicially noticed in all courts of this state. (Amended 1988)

SECTION 27-103. JURISDICTION

The municipal court shall have original jurisdiction to hear and determine all prosecutions wherein a violation of any ordinance of the municipality where the court is established is charged.

SECTION 27-104. JUDGES

A. The number of judges for each municipal court shall be determined by the governing body of the municipality where the court is established. The judge of each municipal court shall be appointed by the mayor of the municipality where the court is established, with the consent of the municipal governing body. The judge of any municipal court shall be licensed to practice law in Oklahoma, except as provided in subsections B and C of this section. He shall serve for a term of two (2) years, said term expiring on a date fixed by ordinance, and until his successor is appointed and qualified, unless sooner removed by the vote of a majority of all members of the governing body for such cause as is provided by law for the removal of public officers. Any appointment to fill a vacancy shall be for the unexpired term. Except in cities of more than two hundred thousand (200,000) population, nothing herein shall be construed to prevent the judge from engaging in the practice of law in any other court during his tenure of office. The judge shall be paid a salary to be fixed by the municipal governing body. He shall be paid in the same manner as other municipal officials.

B. In any municipality with a population of less than seven thousand five hundred (7,500), the mayor, with the consent of the governing body of the municipality, may appoint as judge:

1. An attorney licensed to practice law in Oklahoma, who resides in the county in which the municipality is located or in an adjacent county; or

2. An attorney licensed to practice law in Oklahoma who maintains a permanent office in the municipality; or

3. Any suitable person residing in the municipality or within twenty (20) miles of the boundaries of the municipality.

The mayor may be designated as judge of the municipal court upon approval of the governing body of the municipality.

C. In any municipality with a population of seven thousand five hundred (7,500) or more, if no attorney licensed to practice law in Oklahoma resides in the county or in an adjacent county in which the municipality is located, who is at the time of appointment willing to accept the appointment as judge, the mayor, with the consent of the governing body of the municipality, may appoint any suitable and proper person as judge.

D. If the judge of the municipal court is not a licensed attorney, the trial shall be to the court, and the court may not impose a fine of more than Fifty Dollars ($50.00) and may not order the defendant imprisoned except for the nonpayment of fines or costs or both. (Amended, effective 11/1/84)

SECTION 27-105. PROHIBITION ON CHANGE OF VENUE - DISQUALIFICATION OF JUDGE

No change of venue shall be allowed from any municipal court, but the judge of the municipal court may be disqualified under the same terms and conditions as are now provided by law for courts of record, and in case of such disqualification a special judge shall be appointed as provided in Section 27-104 of this title.

SECTION 27-106. ACTING JUDGE - ALTERNATE JUDGE - COMPENSATION

In the event of disqualification of the judge in a particular case, or his absence or inability to act, the mayor of the municipality may appoint some person, qualified as provided in Section 27-104 of this title, as acting municipal judge of the court in the place of the judge during his absence or inability to act or in a case wherein the judge is disqualified; or, in its discretion, the municipal governing body may provide by ordinance for the appointment of an alternate judge of the court, in the same manner and for the same term as the judge and possessing the qualifications prescribed by Section 27-104 of this title, who shall sit as acting judge of the court in case of the absence, inability or disqualification of the judge. If both the judge and the alternate judge are unable to sit, the mayor may appoint an acting judge as provided in this section. The municipal governing body, by ordinance, shall provide for the compensation of an acting judge of the court.

SECTION 27-107. VACANCIES IN OFFICE OF JUDGE

Vacancies in the office of the judge of any municipal court shall be filled in the same manner as provided for the appointment of the judge in the first instance.

SECTION 27-108. MUNICIPAL ATTORNEY AS PROSECUTING OFFICER

The municipal attorney of each municipality where a municipal court is established may be the prosecutor of the municipal court. The prosecutor shall have full power to prosecute for the violations of any ordinance of the municipality in the municipal court and shall have the power to prosecute and resist appeals and proceedings in error and review from the municipal court. (Amended 11/1/84)

SECTION 27-109. CLERK OF COURT - DUTIES

The municipal clerk of any municipality where a municipal court is established, or a deputy designated by him, shall be ex officio the clerk of the municipal court. The clerk shall:

1. Assist the judge in recording the proceedings of the court, preparation of writs, processes, or other papers;

2. Administer oaths required in judicial or other proceedings before the court;

3. Be responsible for the entry of all pleadings, processes, and proceedings in the dockets of the court;

4. Perform such other clerical duties in relation to the proceedings of the court as the judge shall direct; and

5. Receive and give receipt for and disburse or deliver to the municipal treasurer all fines, forfeitures, fees, deposits, and sums of money properly payable to the municipal court. Such funds and sums of money while in the custody of the clerk shall be deposited and disbursed upon vouchers as directed by the municipal governing body.

SECTION 27-110. COURT MARSHAL - DUTIES

The municipal governing body, upon the recommendation of the judge of the municipal court, may designate any appropriate person who is a resident of the municipality to serve as marshal, and in the absence of such a designation, the chief of police or corresponding officer of the municipality shall be ex officio marshal of the court. The marshal shall execute any writs and other process directed to him, except as herein otherwise provided, and such duty may be performed by any deputy marshal or by any members of the police force of the municipality, as the case may be.

SECTION 27-111. BOND OF CLERK AND JUDGE - FORM

A. The clerk of each municipal court shall give bond to the governing body of the municipality where the court is established. The bond shall be approved by the governing body and shall be in an amount to be fixed by the governing body. The bond shall be in substance as follows:

I, _____, clerk of the Municipal Court of _____, State of Oklahoma, and _____ and _____, his sureties, do jointly and severally agree to pay on demand each and every person who may be entitled thereto, all such sums of money as the said clerk may become liable to pay, on account of any moneys which may come into his hands, by virtue of his office.

Dated at _____, this _____ day of _____, 19____.

_____
(Signed)

B. The municipal governing body may provide that the judge, the alternate judge, and an acting judge, or any of them, shall give a bond to the governing body of the municipality where the court is established. If a bond is required, it shall be in an amount to be fixed by the governing body. It shall be conditioned in the same manner as the bond that is required of the clerk of the court, and it shall be approved by the governing body.

SECTION 27-112. FEES, FINES AND FORFEITURES - DISPOSITIONS

All of the fees, fines, and forfeitures which come into the municipal court shall be paid by the clerk of the court to the municipal treasurer. The treasurer shall credit such deposits to the fund designated by the municipal governing body. The court clerk shall make duplicate receipts for the fees, fines, and forfeitures collected by him, one of which shall be retained by the municipal treasurer together with a detailed statement of all costs, the style of the case in which they were paid, and the name of the party paying the same. (Amended 11/1/84)

SECTION 27-113. PROCEDURE - JUDICIAL NOTICE OF STATUTES AND ORDINANCES - WRITS AND PROCESS

Except as otherwise provided for by law, the code of procedure in the municipal court shall be the same as is provided for by law for the trial of misdemeanors. The court shall take judicial notice of state statutes and the ordinances of the municipality in which it is located. Writs and processes of the court may be issued by the judge or clerk thereof to any proper officer. All writs and processes of the municipal court in which a violation of a municipal ordinance is charged shall be directed to the chief of police of the municipality, a county sheriff, or to some other appropriate peace officer. A law enforcement officer of the municipality or county sheriff may serve an arrest warrant issued by the municipal court any place within this state. If the warrant is served by a county sheriff, the municipality shall pay the Sheriff's Service Fee Account a fee of Twenty Dollars ($20.00). (Amended 1990)

SECTION 27-114. RULES FOR CONDUCT OF COURT BUSINESS

The judge of each municipal court may prescribe rules, consistent with the provisions of this article, for the proper conduct of the business of the municipal court.

SECTION 27-115. PROSECUTIONS BY VERIFIED COMPLAINT - STYLE

All prosecutions commenced in the municipal court shall be by complaint which shall be subscribed by the person making the complaint and shall be verified before a judge, the court clerk, a deputy court clerk, or a police officer. No warrant for arrest shall be issued until the complaint has been approved by the judge of the municipal court. All prosecutions for the violation of municipal ordinances shall be styled, "The _____ (City or Town) of _____ (name the municipality) vs. _____ (naming the person or persons charged)." (Amended 11/1/84)

SECTION 27-116. ARRAIGNMENT - FINES IN LIEU OF APPEARANCE

The arraignment shall be made by the court. The judge or the prosecuting attorney shall read the complaint to the defendant, inform him of his legal rights and of the consequences of conviction, and ask him whether he pleads guilty or not guilty. The municipal governing body by ordinance may prescribe a schedule of fines which the defendant may pay in lieu of his appearance before the municipal court and such payment shall constitute a final determination of the cause against the defendant.

SECTION 27-117. BAIL - RELEASE ON OWN RECOGNIZANCE - TRAFFIC CITATION

A. If a resident of a municipality served by a municipal court is arrested for the violation of any ordinance, traffic or nontraffic, by a law enforcement officer, the officer shall immediately release said person if the person acknowledges receipt of a citation by signing it unless it reasonably appears to the officer that the person may cause injury to himself or others or damage to property if released, that the person will not appear in response to the citation, or the person is arrested for an offense against a person or property. If said person fails to appear in response to the citation, a warrant shall be issued for his arrest and his appearance shall be compelled.

B. If a resident of a municipality served by a municipal court is arrested by a law enforcement officer for the violation of any ordinance and is not released by being permitted to sign a citation as provided in subsection A of this section, he shall be admitted to bail either before or after arraignment, or shall be released on his own recognizance.

C. If a nonresident of a municipality served by a municipal court is arrested for a violation of any ordinance other than a traffic violation by a law enforcement officer, the defendant shall be eligible to be admitted to bail either before or after arraignment.

D. A municipality may require a person who is arrested for a municipal traffic violation by a law enforcement officer to comply with the procedures provided by law in Section 1114.1 of Title 22 of the Oklahoma Statutes for state traffic violations with respect to release of the arrested person. The following methods of posting bail shall apply:

1. Posting cash bail; or

2. Depositing with the arresting officer a "guaranteed arrest bond certificate"; or

3. Depositing with the arresting officer a valid license to operate a motor vehicle in exchange for a receipt therefor issued by the arresting officer, which shall be recognized as an operator's license and shall authorize the person's operation of a motor vehicle until the date of his hearing but not to exceed twenty (20) days. This procedure for depositing a valid operator's license shall not be used unless authorized by a duly enacted ordinance. A municipality may prescribe a fine for up to the maximum amount authorized by the courts not of record for failure of a person to have a valid driver's license when charged with a traffic violation.

E. The amount and conditions of bail granted pursuant to the provisions subsections B and C of this section shall be determined by the judge who shall prescribe rules for the receipt of bail and for the release by recognizance. In the event of arrests at night, emergencies, or when the judge is not available, the chief of police or his designated representative may be authorized by the judge subject to such conditions as shall be prescribed by the judge to accept a temporary cash bond in a sufficient amount to secure the appearance of the accused. The cash bond shall not be more than the maximum fine provided for by ordinance for each offense charged. The chief of police or his designated representative is authorized subject to such conditions as shall be prescribed by the judge to release a resident of the municipality on his own recognizance. (Amended 11/1/84)

SECTION 27-118. FAILURE TO APPEAR ACCORDING TO TERMS OF BOND - FORFEITURE

If, without sufficient excuse, a defendant fails to appear according to the terms or conditions of his bond, either for hearing, arraignment, trial or judgment, or upon any other occasion when his presence in court or before the magistrate may be lawfully required, the judge may direct that fact to be entered upon the court minutes, thereby declaring the bond to be forfeited. Without advancing court costs, the judge shall then cause the forfeiture to be certified to the district court in the county where the situs of the municipal government is located, where it shall be entered upon the judgment docket and shall have the full force and effect of a district court judgment. At such time as the forfeiture is entered upon the district court judgment docket, the district court clerk shall proceed in accordance with the provisions of Sections 1330 through 1333 and 1335 of Title 59 of the Oklahoma Statutes. A surety shall have all remedies available under the provisions of Section 1108 of Title 22 and Sections 1301 through 1340 of Title 59 of the Oklahoma Statutes. Court costs shall be collectible from the proceeds of the bond.

SECTION 27-119. JURY TRIALS - QUALIFICATIONS OF JURORS

In all prosecutions in the municipal court for any offense punishable by a fine of more than One Hundred Dollars ($100.00) or by imprisonment, or by both such fine and imprisonment, a jury trial shall be had unless waived by the defendant and the municipality, provided that the municipality has compiled its penal ordinances in accordance with the provisions of Sections 14-109 and 14-110 of this title. If the municipality has not compiled its ordinances as provided by law, the fine shall not exceed Fifty Dollars ($50.00). In prosecutions for all other offenses, or in cases wherein a jury trial is waived by the defendant and the municipality, trial shall be to the court. A jury in the municipal court shall consist of six (6) jurors, five of whom may return a verdict. Jurors shall be good and lawful men or women, citizens of the county in which the court sits, having the qualifications of jurors in the district court. (Amended, effective 10/1/83)

SECTION 27-120. SELECTION AND SUMMONS OF JURORS

Jurors in the municipal court shall be selected under the same terms and conditions as are provided for by law for the district courts. Upon written request of the judge of the municipal court for a stated number of jurors to the chief judge of the appropriate district court, it shall be the duty of the clerk of the district court to draw from the jury wheel a requested number of jurors in the same manner as is provided by law for the district court until the number requested, who from their addresses appear to reside within the corporate limits of the municipality, is drawn, and to prepare a list of names drawn and certify such list to the judge of the municipal court. On completion of the draw, the clerk shall immediately return to the jury wheel all names drawn which are not placed on the certified list. The judge of the municipal court shall make written request to the chief judge of the district court for a stated number of additional jurors if, after allowance of claimed statutory exemptions, the listed number is found to be insufficient. Summons of the prospective jurors shall be issued as set out by ordinance, and may be served in person by the chief of police or any member of the police force of the municipality, or may be served by the clerk of the municipal court by mail.

SECTION 27-121. FEES AND MILEAGE OF JURORS AND WITNESSES

The municipal governing body shall determine by ordinance the fees and mileage that shall be paid to jurors and witnesses in a municipal court. However, no witness fee shall be paid to any police or peace officer. The jury fee and mileage due jurors and witnesses shall be paid as provided by ordinance.

SECTION 27-122. ENFORCEMENT OF PAYMENT OF FINES OR COSTS BY IMPRISONMENT - PERSONS UNABLE TO PAY

A. If a defendant who is financially able refuses or neglects to pay a fine or costs or both, payment may be enforced:

1. By imprisonment until the same shall be satisfied at the rate of Five Dollars ($5.00) per day; or

2. In the same manner as is prescribed in subsection B of this section for a defendant who is without means to make such payment.

B. If the defendant is without means to pay the fine or costs, the municipal judge may direct the total amount due to be entered upon the court minutes and to be certified to the district court in the county where the situs of the municipal government is located where, it shall be entered upon the district court judgment docket and shall have the full force and effect of a district court judgment. Thereupon the same remedies shall be available for the enforcement of the judgment as are available to any other judgment creditor. (Amended, effective 11/1/87)

SECTION 27-122.1 MUNICIPAL COURTS - SENTENCES - COSTS

A. All sentences of imprisonment shall be executed by the chief of police of the municipality, and any person convicted of a violation of any ordinance of the municipality and sentenced to imprisonment shall be confined in the jail, farm or workhouse, of the municipality, in the discretion of the court, for the time specified in the sentence; provided, however, the court may, in lieu of imprisonment, order the defendant to engage in a term of community service without compensation. If the defendant fails to perform the required community service or if the conditions of community service are violated, the judge may impose a sentence of imprisonment, not to exceed the maximum sentence allowable for the violation for which the defendant was convicted.

B. The judge of the municipal court imposing a judgment and sentence, at his discretion, is empowered to modify, reduce, or suspend or defer the imposition of such sentence or any part thereof and to authorize probation for a period not to exceed six (6) months from the date of sentence, under such terms or conditions as the judge may specify. Procedures relating to suspension of the judgment or costs or both shall be as provided in Section 27-123 of Title 11 of the Oklahoma Statutes. Upon completion of the probation term, the defendant shall be discharged without a court judgment of guilt, and the verdict, judgment of guilty or plea of guilty shall be expunged from the record and said charge dismissed with prejudice to any further action. Upon a finding of the court that the conditions of probation have been violated, the municipal judge may enter a judgment of guilty.

C. The judge of the municipal court may continue or delay imposing a judgment and sentence for a period of time not to exceed six (6) months from the date of sentence. At the expiration of such period of time the judge may allow the municipal attorney to amend the charge to a lesser offense.

D. If a deferred sentence is imposed, an administrative fee of not to exceed One Hundred Dollars ($100.00) may be imposed as costs in the case.

E. For the purposes of this section, "judge of the municipal court" means a municipal court judge who is licensed to practice law in Oklahoma. (Amended 1990)

SECTION 27-122.2 COMMUNITY SERVICE IN LIEU OF FINE OR IN CONJUNCTION WITH IMPRISONMENT - VIOLATION OF COMMUNITY SERVICE CONDITIONS

Whenever a person is convicted in municipal court for violation of a municipal ordinance, the court may order the defendant to a term of community service or remedial action in lieu of fine or in conjunction with imprisonment. If the defendant fails to perform the required community service or if the conditions of community service are violated, the judge may impose a sentence of imprisonment, not to exceed the maximum sentence allowable for the violation for which the defendant was convicted. (Amended 1990)

SECTION 27-123. SUSPENSION OF JUDGMENT OR COSTS - RECONFINEMENT

Whenever any person shall be convicted in the municipal court of violating a municipal ordinance, the judge trying the cause, after sentence, may suspend the judgment or costs or both and allow the person so convicted to be released upon his own recognizance. Any person so released shall be required to report at such times and to such person or officer as the judge shall direct. The judge may cause a warrant to be issued for any person so released if it shall be made to appear to the judge that such person:

1. Has been guilty of the violation of any law after his release;
2. Is habitually associating with lewd or vicious persons; or
3. Is indulging in vicious habits.

Upon the issuance of the warrant by the judge, the person shall be delivered forthwith to the place of confinement to which he was originally sentenced and shall serve out the full term for which he was originally sentenced.

SECTION 27-124. SUPERVISION OF JUVENILES ON PAROLE OR PROBATION

In addition to the duties otherwise provided by law, the judge of each municipal court, or some other person designated by the governing body of the municipality where the court is established, shall be required to supervise all juveniles who are either on parole or serving probation terms or suspended sentences pronounced and adjudged by the municipal court.

SECTION 27-125. CONTEMPT OF COURT

The judge of each municipal court shall have power to enforce due obedience to orders, rules and judgments made by him and may fine or imprison for contempt offered to the judge while holding his court or to process issued by him in the same manner and to the same extent as the district courts of Oklahoma.

SECTION 27-126. COSTS

The municipal governing body shall determine by ordinance the costs that shall be charged and collected by the clerk of the court, but such costs shall not exceed the sum of Fifteen Dollars ($15.00) plus the fees and mileage of jurors and witnesses. (Amended 11/1/87)

SECTION 27-127. PROSECUTION FOR SAME OFFENSE OF ANOTHER COURT PROHIBITED

When a defendant has been in jeopardy for the same or any lesser included offense in a municipal court, or district court, he shall not be prosecuted in another court for the same or a lesser included offense. (Amended, effective 10/1/80)

SECTION 27-128. WRITS OF MANDAMUS, PROHIBITION AND CERTIORARI

The district court in each county wherein a municipal court is established shall have the same jurisdiction to issue to the municipal court writs of mandamus, prohibition and certiorari as the Supreme Court now has to issue such writs to courts of record.

SECTION 27-129. APPEALS

A. An appeal may be taken from a final judgment of the municipal court by the defendant by filing in the district court in the county where the situs of the municipal government is located, within ten (10) days from the date of the final judgment, a notice of appeal and by filing a copy of the notice with the municipal court. In case of an appeal, a trial de novo shall be had, and there shall be a right to a jury trial if the offense is punishable by a fine of more than One Hundred Dollars ($100.00) and costs.

B. Upon conviction, at the request of the defendant, or upon notice of appeal being filed, the judge of the municipal court shall enter an order on his docket fixing an amount in which bond may be given by the defendant, in cash or sureties for cash in an amount of not less than One Hundred Dollars ($100.00) nor more than Two Hundred Dollars ($200.00); except that, if the conviction involved a fine only, the amount of the bond shall be no greater than twice the amount of such fine. Bond shall be taken by the clerk of the court wherein judgment was rendered. Any pledge of sureties must be approved by a judge of the court.

C. Upon appeal being filed the judge shall within ten (10) days thereafter certify to the clerk of the appellate court the original papers in the case. If the papers have not been certified to the appellate court, the prosecuting attorney shall take the necessary steps to have the papers certified to the appellate court within twenty (20) days of the filing of the notice of appeal, and failure to do so, except for good cause shown, shall be grounds for dismissal of the charge by the appellate court, the cost to be taxed to the municipality. The certificate shall state whether or not the municipal judge hearing the case was a licensed attorney in Oklahoma.

D. All proceedings necessary to carry the judgment into effect shall be had in the appellate court. (Amended, effective 10/1/83)

SECTION 27-130. DISTRICT ATTORNEY TO DEFEND APPEALS IN CERTAIN CASES

The district attorney, and his assistants, shall defend any appeal from a municipal court in his district that has no municipal attorney who is paid a salary in excess of a rate of Three Thousand Six Hundred Dollars ($3,600.00) per annum.

SECTION 27-131. ORDERS RELATIVE TO PROCEDURES AND PRACTICES BY SUPREME COURT

The Supreme Court is authorized to issue orders of statewide application relative to procedures in and practices before the municipal courts and appeals therefrom, subject to the provisions of this article, and under its general superintending control of all inferior courts, shall have the power and authority by and through the Chief Justice of the Supreme Court, to call annual conferences of the judges of the municipal courts of Oklahoma to consider matters calculated to bring about a speedier and more efficient administration of justice.

SECTION 27-132. APPEALS FROM DISTRICT COURT

An appeal may be taken to the Court of Criminal Appeals from the final judgment or order of a district court in an appeal from a final judgment of a municipal court in the same manner and to the same extent that appeals are taken from a district court to the Court of Criminal Appeals.

APPENDIX LIST

SUPPLEMENT TO PIEDMONT CODE AS OF MAY 1, 2003

The following ordinances are not codified but are enacted as supplements to the Code. Copies of these supplements are on file for inspection in the Office of the City Clerk of the City of Piedmont, Oklahoma.

1. Ordinance No. 381 adopted 09/27/99 amending the City's Retirement System.

2. Ordinance No. 384 adopted 01/24/00 adopting revised Code of Ordinances.

3. Ordinance No. 388 adopted 04/24/00 rezoning Section 35-14-5 to RE-2.

4. Ordinance No. 389 adopted 04/24/00 rezoning Section 26-14-5 to RE-2.

5. Ordinance No. 396 adopted 03/23/01 rezoning 16-14-5 to RE.

6. Ordinance No. 399 adopted 06/25/01 amending City's Retirement System.

7. Ordinance No. 402 adopted 07/23/01 rezoning Section 34-14-5 to RE-1.

8. Ordinance No. 403 adopted 07/23/01 amending City's Retirement System.

9. Ordinance No. 404 adopted 07/23/01 amending City's Retirement System.

10. Ordinance No. 408 adopted 11/26/01 rezoning Section 5-14-5 to RE.

11. Ordinance No. 410 adopted 02/25/02 rezoning Block 34, Piedmont, to C-3.

12. Ordinance 418 adopted 05/28/02 rezoning Section 17-4-5 to RE-1.

13. Ordinance No. 422 adopted 09/23/02 rezoning Lot 20, Block 59, Piedmont to RD-1.

14. Ordinance No. 423 adopted 08/26/02 amending City's Retirement System.

15. Ordinance No. 424 adopted 10/28/02 rezoning Section 29-14-5 to C-2.

16. Ordinance No. 426 adopted 01/27/03 rezoning Section 3-14-5 to RE.

17. Ordinance Nos. 416 and 420 adopted -2/18/02 and 06/27/02 pertaining to fireworks with no change to current Code.

APPENDIX 9

(This page intentionally left blank)

APPENDIX 10

GENERAL ORDINANCES NOT CODIFIED

Ordinance No. 429	Retirement System (See ordinance book)
Ordinance No. 430	Retirement System (See ordinance book)
Ordinance No. 439	Retirement System (See ordinance book)
Ordinance No. 440	Retirement System (See ordinance book)
Ordinance No. 442	Uniform Code for Emergency Medical Services (See ordinance book)
Ordinance No. 494	9-1-1 Voice Over Internet Protocol Emergency Service Fee
Ordinance No. 522	Transfer of Property to Eastwind Estates HOA Private Park
Ordinance No. 569	Electricity Franchise
Ordinance No. 577	USDA-RBEG-Revolving Loan Fund
Ordinance No. 583	Retirement System
Ordinance No. 584	Retirement System
Ordinance No. ___	Adopting and Enacting Code of Ordinances

ORDINANCE #491
AN ORDINANCE OF THE
COUNCIL/BOARD OF TRUSTEES OF THE
CITY/TOWN OF Piedmont
ESTABLISHING THE NINE-ONE-ONE
VOICE OVER INTERNET PROTOCOL (VOIP)
EMERGENCY SERVICE FEE

WHEREAS, more and more residences and businesses are abandoning their traditional telephone service for dial tone utilizing voice over internet protocol; and

WHEREAS, these residences and businesses still need access to public safety emergency services through the utilization of the existing regional enhanced nine-one-one system; and

WHEREAS, the voters and/or governing body of the city/town have approved the acquisition and operation of an emergency telephone service, together with the levy or imposition of user fee/tax for such service; and

WHEREAS, the state statutory authority to enact a 9-1-1 service fee on customers utilizing dial tone telephony service through Interconnected Voice over Internet Protocol is authorized by the Nine-One-One Voice over Internet Protocol (VoIP) Emergency Service Act, Oklahoma Statutes Section 2851 of Title 63.

THEREFORE, a 9-1-1 service fee is hereby ADOPTED AND IMPOSED by the Council/Board of Trustees of the City/~~Town~~ of Piedmont upon Interconnected Voice over Internet Protocol telephony service customers whose businesses or residences are located within the City/~~Town~~ limits of Piedmont, at the rate of fifty-cents ($0.50) per month for each VoIP service user, pursuant to the Title 63, O.S. (2006), section 2851 et.seq.

In addition all VoIP carriers having customers within the City/~~Town~~ of Piedmont shall provide an annual census of customers to the City/Town no later than sixty (60) days after the first day of each calendar year.

Adopted and approved by the Council/Board of Trustees of the City/~~Town~~ of Piedmont this 27 day of December 2006.

Dennis J. Robinson
Mayor/Chairman

ATTEST:

City/Town Clerk

ORDINANCE NO. 522

AN ORDINANCE AUTHORIZING THE TRANSFER OF CERTAIN PROPERTY OWNED BY THE CITY OF PIEDMONT LOCATED IN THE SOUTHEAST QUARTER OF SECTION 34, TOWNSHIP 14 NORTH, RANGE 5 WEST CANADIAN COUNTY, OKLAHOMA, TO EASTWIND ESTATES HOMEOWNERS ASSOCIATION FOR PURPOSES OF A PRIVATE PARK AND RELATED USES; PROVIDING FOR EFFECTIVE DATE AND RIGHT OF REFERENDUM.

BE IT ORDAINED BY THE CITY COUNCIL OF THE CITY OF PIEDMONT:

Section 1. WHEREAS, the City of Piedmont owns certain property as hereinafter described and said property currently being used as a public park known as Virginia Rother-Simpson Park. The park was deeded to the City of Piedmont by the developers of Eastwind Estates Addition to Piedmont with no restrictions on its use. The park is located along a major section line road with no parking facilities and has no value as a public park but does serve as a neighborhood park and open space for the Eastwind Estates Addition. The City of Piedmont has determined that the park is not desirable or suitable as a public park and the City of Piedmont does not have the resources, manpower or ability to maintain and improve the park so as to benefit the users living nearby. By reason of deterioration and lack of maintenance the park area has become a liability rather than an asset of the City. The Eastwinds Estates Homeowners Association is willing and able to accept the transfer of the park land for use of the residents in proximity to the park and is willing to maintain, improve and repair the park area as a common area under the restrictive covenants of the addition.

Section 2. The City Council of the City of Piedmont, Oklahoma, hereby approves and authorizes the transfer of said park to the Eastwind Estates Homeowners Association for their use as a common area and park for the subdivision which the park abuts. The instrument of

conveyance shall provide that the area shall perpetually be maintained in good repair as Virginia Rother-Simpson Park and storm water detention area as it was originally designed. Further the instrument of conveyance shall provide that the land area will be maintained by the homeowner's association as a park, storm water detention area and open space uses. The land described in this ordinance is as follows:

Canadian County, Oklahoma, to wit:

VIRGINIA ROTHER SIMPSON PARK lying in Eastwind Estates Addition, a part of the SE/4 of Section 34, Township 14 North, Range 5 West of the Indian Meridian, Piedmont, Canadian County, Oklahoma, more particularly described as BEGINNING at the Southeast Corner of Lot 11, Block 4, which is 845.10 feet along and following the South Section line bearing N 89°34'36" E and 50.00 feet North bearing N 00°00'52" W from the South Quarter (S/4) Corner of Section 34 (The S/4 Corner is also known as the Southeast Corner of Lot 11, Block 4, Eastwind Estates Estates Addition), THENCE 483.88 feet bearing N 89°34'36" E, THENCE 366.80 feet bearing N 00°05'59" W to a ½" rebar at the Southeast Corner of Lot 17, Block 3, THENCE 348.33 feet along and following the South line of Lot 17, Block 3, bearing S 89°59'08" W to the Southwest Corner of Lot 17, THENCE 363.81 feet along and following the South line of Lot 6, Block 4, bearing N 65°07'03" W to the Southeast Corner of Lot 17, Block 4, THENCE 105.81 feet bearing S 15°01'35" E to the Northeast Corner of Lot 8, Block 4, THENCE 59.74 feet along and following the East line of Lot 8, Block 4, bearing S 00°00'52" E to the Southeast Corner of Lot 8, THENCE 94.23 feet along and following a curve to the right having a radius of 60.00 feet and a chord length of 84.84 feet and a chord bearing of S 45°00'24" E to the North Corner of Lot 11, Block 4, THENCE 126.92 feet bearing S 57°59'38" E to the Northeasterly Corner of Lot 11, Block 4, THENCE 234.26 feet along and following the East line of Lot 11, Block 4, bearing S 00°00'52" E to the point of beginning. This tract contains 4.89 acres more or less.

Section 3. This ordinance shall be referred to a vote of the electors of the City if a proper referendum petition is properly filed within thirty (30) days after its passage; otherwise, it shall go into effect thirty (30) days after its passage.

END

The foregoing ordinance was introduced before the Piedmont City Council on the 24 day of November, 2008, and was duly adopted and approved by the Mayor and City Council on the 24 day of November, 2008, after compliance with notice

requirements of the Open Meeting Law (25 OSA, Sections 301, et seq.).

MAYOR

ATTEST:

CITY CLERK

Approved as to form and legality on 11/24/ 2008

CITY ATTORNEY

NOTE TO PUBLISHER: **Publish one time in full**

Published in The Piedmont-Surry Gazette on the 5th day of May 20 11
The Kingfisher Times-Free Press on the 4th day of May 20 11

ORDINANCE NUMBER 569

AN ORDINANCE GRANTING TO THE OKLAHOMA GAS AND ELECTRIC COMPANY, AN OKLAHOMA CORPORATION, ITS SUCCESSORS AND ASSIGNS, THE RIGHT TO PRODUCE, TRANSMIT AND DISTRIBUTE ELECTRICITY WITHIN THE CITY LIMITS AND TO SELL ELECTRICITY THEREIN FOR ALL PURPOSES FOR WHICH IT MAY BE USED, TO THE CITY OF PIEDMONT, CANADIAN AND KINGFISHER COUNTIES, OKLAHOMA, ITS INHABITANTS AND THE PUBLIC GENERALLY, AND THE RIGHT TO CONSTRUCT, MAINTAIN AND OPERATE A SYSTEM OF POLES, WIRES, CONDUITS AND OTHER FACILITIES AND EQUIPMENT IN, UPON, ACROSS, UNDER AND OVER THE STREETS, ALLEYS, PUBLIC GROUNDS AND OTHER PLACES IN THE CITY FOR SUCH PURPOSES FOR A PERIOD OF TWENTY-FIVE (25) YEARS FROM THE APPROVAL AND ACCEPTANCE OF THIS ORDINANCE; SETTING FORTH AND DEFINING THE RIGHTS, PRIVILEGES, AND AUTHORITY GRANTED TO THE COMPANY; PROVIDING FOR OPERATION THAT WILL NOT UNDULY IMPEDE TRAFFIC; PROVIDING FOR INDEMNIFICATION; PROVIDING FOR REGULATION OF SERVICE; PROVIDING FOR ASSIGNMENT; PROVIDING COMPENSATION TO THE CITY; PROVIDING FOR RENEGOTIATION OF THE FRANCHISE UNDER CERTAIN CONDITIONS; PROVIDING FOR TERMINATION PURSUANT TO OPTION; PROVIDING FOR NOTICES; PROVIDING FOR REGULATIONS CONCERNING LOCATION OF COMPANY FACILITIES; ORDERING A SPECIAL ELECTION; AND PROVIDING THAT THE FRANCHISE HEREBY GRANTED SHALL, ON ITS EFFECTIVE DATE, SUPERSEDE AND TERMINATE ANY PREVIOUS FRANCHISE GRANTED TO OR HELD BY THE COMPANY

BE IT ORDAINED BY THE CITY COUNCIL OF THE CITY OF PIEDMONT, OKLAHOMA:

SECTION 1. The Word "City" as hereinafter used shall mean and designate the City of Piedmont, Canadian and Kingfisher Counties, Oklahoma, and the word "Company" as hereinafter used shall mean and designate the Oklahoma Gas and Electric Company, a corporation organized and existing under and by virtue of the laws of the State of Oklahoma and its successors and assigns.

SECTION 2. (a) The City hereby grants to the Company the right, privilege and authority to produce, transmit, distribute and sell electricity within the corporate limits of the City for all purposes for which it may be used, to the City, its inhabitants and the public generally, and the right, privilege and authority to construct, maintain and operate a system of poles, wires, conduits, transformers, substations, and other facilities and equipment in, upon, across, under and over the streets, alleys, public grounds and other places in each and every part

of said City for the purpose of producing, transmitting, distributing and selling electricity to the City, its inhabitants, and to the public generally. The City and Company understand and agree that the rights, privileges and authority granted to the Company under this ordinance to use the public streets, alleys, public grounds and other places in each and every part of said City shall be limited to the transmission, distribution and sale of electricity that is produced by the Company or by others and that is sold by the Company to the City, its inhabitants, and the public generally; provided, the parties understand and agree that the Company has the right under this Ordinance to use the public streets, alleys, public grounds and other places in each and every part of said City to transmit and distribute electricity to any person or persons located outside the corporate limits of the City regardless of whether such electricity is being sold by the Company or by others; provided further, the rights and privileges granted by this ordinance shall include the right, power and authority for Company to install, operate and maintain the plants, and systems described herein for the purpose of providing telecommunications, telecommunications services, cable services and information services to the extent that such are related to and used solely in connection with Company's production, transmission, distribution and sale of electric energy and related services, and not for the purpose of selling or providing such telecommunications, telecommunications services, cable services and information services to the public generally.

(b) The franchise hereby granted shall be effective from and after the date of approval of this Ordinance by the qualified electors of the City and acceptance by the Company, and shall remain in full force and effect for a period of twenty-five (25) years. Nothing in this Ordinance shall be construed to prevent the City from granting an electric franchise to any other person, firm, or corporation.

SECTION 3. The Company shall construct, operate and maintain its property in such manner as will, consistent with necessity, not obstruct nor impede traffic unduly.

SECTION 4. The Company shall defend and indemnify the City against all liability for injury to any person or property caused by the negligence of the Company in the construction, operation and maintenance of its property within the City.

SECTION 5. Electric service provided hereunder to the City, its inhabitants, and to the public generally, and rates charged therefor shall be in accordance with orders, rules and regulations of the Corporation Commission of the State of Oklahoma or other governmental authority having jurisdiction.

SECTION 6. The Company shall have the right to assign this franchise and the assignee by written acceptance thereof shall be bound by all the provisions hereof. An authenticated copy of such assignment and acceptance shall be filed with the Clerk of the City.

SECTION 7. (a) From and after the approval and acceptance of this franchise, and in consideration of the granting of this franchise, the Company agrees to pay and shall pay to the City an annual franchise fee in an amount equal to three percent (3%) of its gross revenues arising from the sale of electricity within the corporate limits of the City, such payment to be made on or before the 25th day of each month based on the receipts of the Company for the preceding calendar month, after deducting therefrom any amount due the Company from the City.

(b) The Company shall abide by any order, rule or regulation of the Corporation Commission of the State of Oklahoma requiring the listing separately of all or any portion of such franchise fee on electric bills to customers.

(c) Such franchise fees paid by the Company to the City shall be in lieu of all other franchise, excise, license, occupation, privilege, inspection, permit, or other fees, taxes or assessments, except ad valorem taxes.

(d) If after the acceptance of this Ordinance, any legislation, rule or regulation is enacted that significantly restructures the electric utility industry (commonly referred to as "deregulation") in a manner that substantially affects the compensation provided to the City or paid by the Company or rights granted to the Company or the City, either party, within twelve (12) months from the effective date of said legislation, rule or regulation, may request renegotiation of the franchise by giving thirty (30) days written notice to the other. Upon receipt of such notice, the parties shall endeavor to address the issue of a revised franchise and make reasonable efforts to resolve the issue. If after a period of six (6) months from receipt of said notice, the parties are unable to reach an agreement on a revised franchise, either party shall have the option, for a period of six (6) months thereafter, to terminate the franchise upon the giving twelve (12) months advance written notice. If agreement is reached on a revised franchise between the City and Company, the issue of revision of the franchise shall be submitted for election by the qualified electors of the City of Piedmont in accordance with applicable laws. If a majority of the qualified electors of the City of Piedmont vote against the revision of the franchise, the franchise then in effect will continue in full force and effect until the end of the term provided for in paragraph (b) of Section 2 above.

SECTION 8. The Company shall furnish to the City without charge each fiscal year during the term hereof electric current to be used exclusively by the City for operation of street lights, traffic signal lights and buildings occupied and operated by the City for municipal purposes, to be applied by the Company as a credit to billings to the City, provided that such electric current shall not exceed one-half of one percent (0.5%) of the kilowatt-hours sold by the Company to customers within the corporate limits of the City during the preceding fiscal year.

SECTION 9. In the event the City adopts and enforces lawful regulations concerning installation, operation and maintenance of Company's facilities located along, across, over, or under the public streets and ways of City and designates where such plants and systems are placed, the City agrees that in the event it requires the installation of any portion of Company's plant and system contrary to Company's then current installation, operation and maintenance or replacement procedures, City shall pay and reimburse Company for the difference between the reasonable cost of such required procedures and the reasonable cost of Company's then current procedures.

SECTION 10. A special election is hereby called for the purpose of submitting this Ordinance to the qualified electors of the City residing within its corporate limits for their approval or disapproval, provided the Company shall pay the cost of such election. The election shall be held on the 9th day of August, 20 11, between the hours of 7:00 a.m. and 7:00 p.m. The Mayor of the City Council is authorized and directed to issue an election proclamation calling such election and is further directed to take all steps that may be necessary

for holding the election and for the submission of this Ordinance to the qualified electors of the City. If a majority of the qualified electors of the City voting thereon fail to approve this franchise at said election, no rights shall accrue hereunder.

SECTION 11. In case the franchise hereby granted is approved at said election, the Company shall, within thirty (30) days from the date of such approval, file with the Clerk of the City, in writing, its acceptance. In the event the Company fails to accept within the said period, such failure shall be deemed a rejection of the franchise.

SECTION 12. The franchise hereby granted shall, on its effective date, supersede and terminate any previous franchise granted to or held by the Company.

PASSED AND APPROVED this 25th day of April, 2011.

CITY OF PIEDMONT, OKLAHOMA

By _____
Mayor

ATTEST:

_____
City Clerk

(SEAL)

CITY OF PIEDMONT OKLAHOMA
Corporate
SEAL
OKLAHOMA

ORDINANCE 577

USDA-RBEG-REVOLVING LOAN FUND

THE CITY OF PIEDMONT, OKLAHOMA, IS CREATING A REVOLVING LOAN FUND TO BE ADMINISTERED BY THE CITY OF PIEDMONT FOR THE DEVELOPMENT AND ATTRACTION OF NEW AND SMALL BUSINESSES TO THE CITY OF PIEDMONT. SETTING OUT THE APPLICATION PROCESS; CREATING A ADMINISTERIVE PROCESS OF SUCH FUNDS; DEFINING THE QUALIFICATIONS FOR APPLICANTS; OUTLINING THE PARAMETERS OF SUCH LOANS; ESTABLISHING APPLICATION FEES; DEFINING THE CRITERIA FOR DISTRIBUTION OF FUNDS; SETTING FORTH THE PROCEEDS OF SUCH FUND.

SECTION 1. ESTABLISHING THE PIEDMONT REVOLVING LOAN FUND.

The City of Piedmont hereby establishes a unique financing program designed to promote and attract small businesses to the City of Piedmont area. This fund will provide low interest loans to local qualified parties.

ARTICLE A. PIEDMONT REVOLVING LOAN FUND

SECTION 1. FUNDING

The Piedmont Revolving Loan Fund shall be funded by grants issued by the USDA. All applicants shall follow the USDA guidelines and requirements for all Rural Development Enterprise Grants or other regular.

SECTION 2. ACCOUNT

The City of Piedmont shall establish an interest bearing account for the Piedmont Revolving Loan Fund. Such account shall be monitored and administered by the Community Development Director

ARTICLE B. APPLICATION PROCESS

All businesses/individuals shall complete the required application process including submission of all required documents before consideration by the Community Development Director

SECTION 1. APPLICANTS

All applicants for a loan from the Piedmont Revolving Fund shall set out to establish, promote or retain a business within the Piedmont city limits.

Applicants shall not have more than 50 employees at the time of application.

Applicants shall have an annual gross income of less than $1,000,000.00 for the two (2) years preceding the application.

SECTION 2. DOCUMENTS REQUIRED FOR APPLICATION

All interested parties shall complete the application form and provide a financial statement and three (3) year documentation of income (tax return or three-year Performa), promissory note, business plan/statement and geographical map of business location.

The application shall be on a form approved by the Community Development Director.

The business plan/statement shall include the nature of the existing or proposed business; the number of jobs to be created or saved by the business and the proposed use of the loan.

The applicant shall also provide any additional document or information as deemed necessary by the Community Development Director for the processing of the application.

Credit Report will be conducted by the City of Piedmont; applicant must submit a standard fee set by City Manager for a Non-Refundable Credit Report.

SECTION 3. SUBMISSION

No application shall be considered complete until all required documents have been provided.

After the Community Development Director determines all required documents have been completed and approved the application shall be submitted the City Manager for their review within 30 days.

SECTION 4. TIME FRAME FOR COMPLETION

No application shall be considered complete until all documents are received. If any applicant does not complete the application process within 30 days after a request for the additional information is sent, such application shall be considered null and void.

ARTICLE C. LOAN REVIEW

Once an applicant has completed all requirements of Article B, the Community Development Director will review such application. If all criteria are met, applications will be submitted for approval on a first come/first serve basis.

The Community Development Director shall review and recommend applicants for approval by the City Manager. The final grant and loan approval is at the sole discretion of the City Manager. The loan approval process shall follow all USDA and governmental guidelines for applications and approving loans.

SECTION 1. ADMINISTRATION

The Finance Director shall be responsible for the administration and monitoring of all loans dispersed from the Piedmont Revolving Fund. Such administration includes but is not limited to the collection of all payments, the dispersement of all monies and the enforcement of all requirements.

The Community Development Director shall be responsible for all USDA Rural Development compliance regulations and requirements.

SECTION 2. NOTICE OF DETERMINATION

The Community Development Director shall notify each applicant within 14 days of its decision to submit the application to the USDA for approval. Such notice shall contain the specific reason(s) for the approval or rejection of the application.

ARTICLE D. LOANS

SECTION 1. LOANS

Loans from the Piedmont Revolving Fund may range from $5,000.00 - $99,999.00. However, the City Manager shall have the right to approve any loan up to the applied for amount.

SECTION 2. PURPOSE

The purpose of such loans shall be for the acquisition of land and/or buildings, construction or renovation of facilities, the purchase of machinery or equipment, inventory, or for the use of working capital necessary to retain or create jobs within the City of Piedmont.

However, nothing in this section shall limit the Community Development Director or city manager from approving or submitting a loan application for any other purpose in the furtherance of the goals and purpose of this Ordinance.

SECTION 3. INTEREST

The interest rate for each loan shall be determined by the Wall Street Prime Rate as established on date of submission of application minus 1 point.

SECTION 4. TERM

The loan term shall depend upon the amount of the requested loan and shall be at the sole discretion of the City Manager and Community Development Director. However, no loan term shall be less than one (1) years or longer than fifteen (15) years.

The Community Development Director shall set up and determine a payment plan for each loan granted.

SECTION 5. COLLATERAL

All loans shall be secured by approved collateral. Acceptable collateral/security includes but is not limited to: mortgages (business or personal); liens on business assets; corporate and/or personal guarantees; or any other collateral approved by City Manager.

SECTION 6. PENALTIES

If any full installment payment is not made by the due date specified in the payment plan, there shall be a late fee and penalties to be established by the City Manager. Collection proceedings shall be intiated If any account is more than 90 days past due.

All applicable fees shall be charged to the payor in default for any collection process.

END

The foregoing ordinance was introduced before the Piedmont City Council on the 27 day of December, 2011, and was duly adopted and approved by the Mayor and City Council on the 27 day of February 2012, after public hearing, and after compliance with notice requirements of the Open Meeting Law (25 OSA, Sections 301, et seq.).

MAYOR

ATTEST:

CITY CLERK

Approved as to form and legality on ~~December~~ February 27, 2012.

CITY ATTORNEY

ORDINANCE NO. 583

AN ORDINANCE ADOPTING AN EMPLOYEE RETIREMENT SYSTEM, DEFINED BENEFIT PLAN FOR THE **CITY OF PIEDMONT & PIEDMONT MUNICIPAL AUTHORITY,** OKLAHOMA; PROVIDING RETIREMENT BENEFITS FOR ELIGIBLE EMPLOYEES OF CITY OF PIEDMONT & PIEDMONT MUNICIPAL AUTHORITY, OKLAHOMA; PROVIDING FOR PURPOSE AND ORGANIZATION; PROVIDING FOR DEFINITIONS; PROVIDING FOR ELIGIBILITY AND PARTICIPATION; PROVIDING FOR EMPLOYER AND EMPLOYEE CONTRIBUTIONS; PROVIDING FOR ACCOUNTING, ALLOCATION, AND VALUATION; PROVIDING BENEFITS; PROVIDING FOR REQUIRED NOTICE; PROVIDING FOR AMENDMENTS AND TERMINATION; PROVIDING FOR TRANSFER TO AND FROM OTHER PLANS; CREATING A COMMITTEE AND PROVIDING FOR POWERS, DUTIES, AND RIGHTS OF COMMITTEE; PROVIDING FOR PAYMENT OF CERTAIN OBLIGATIONS; PROVIDING FOR DURATION AND PAYMENT OF EXPENSES; PROVIDING FOR EFFECTIVE DATE; PROVIDING FOR VESTING SCHEDULES; PROVIDING FOR A FUND TO FINANCE THE SYSTEM TO BE POOLED WITH OTHER INCORPORATED CITIES, TOWNS AND THEIR AGENCIES AND INSTRUMENTALITIES FOR PURPOSES OF ADMINISTRATION, MANAGEMENT, AND INVESTMENT AS PART OF THE OKLAHOMA MUNICIPAL RETIREMENT FUND; PROVIDING FOR PAYMENT OF ALL CONTRIBUTIONS UNDER THE SYSTEM TO THE OKLAHOMA MUNICIPAL RETIREMENT FUND FOR MANAGEMENT AND INVESTMENT; PROVIDING FOR NON-ALIENATION OF BENEFITS AND LOSS OF BENEFITS FOR CAUSE; ADOPTING THOSE AMENDMENTS MANDATED BY THE INTERNAL REVENUE CODE; PROVIDING FOR EMPLOYER PICKUP OF MANDATORY CONTRIBUTIONS; PROVIDING FOR REPEALER AND SEVERABILITY; AND DECLARING AN EMERGENCY.

BE IT ORDAINED BY THE CITY COUNCIL OF PIEDMONT & PIEDMONT MUNICIPAL AUTHORITY, OKLAHOMA:

Section 1. That pursuant to the authority conferred by the laws of the State of Oklahoma, and for the purpose of encouraging continuity and meritorious service on the part of City employees and thereby promote public efficiency, there is hereby authorized created, established, and approved and adopted, effective as of **July 1, 2013,** the funded Plan designated "Employee Retirement System of the City of Piedmont & Piedmont Municipal Authority, Oklahoma, Defined Benefit Plan," (hereinafter called System), an executed counterpart of which is marked Exhibit "A" (Joinder Agreement) and Exhibit "B" (Defined Benefit Master Plan) and attached hereto as part hereof.

Section 2. ADMINISTRATION. For the purpose of administration the System there is hereby established a Committee, which shall be the members of the City Council of City of Piedmont & Piedmont Municipal Authority, Oklahoma, as now existing or as from time to time duly elected or appointed and constituted. The powers and duties of the Committee shall be as set forth in the System instrument attached hereto as Exhibit "B".

Section 3. FUND. A fund is hereby provided for the exclusive use and benefit of the persons entitled to benefits under the System. All contributions to such fund shall be paid over to and received in trust for such purpose by the City. Such Fund shall be pooled for purposes of

management and investment with similar funds of other incorporated cities, towns, and municipal trusts in the State of Oklahoma as a part of the Oklahoma Municipal Retirement Fund in accordance with the trust agreement of the Oklahoma Municipal Retirement Fund, a public trust. The City shall hold such contributions in the form received, and from time to time pay over and transfer the same to the Oklahoma Municipal Retirement Fund, as duly authorized and directed by the Board of Trustees. The Fund shall be nonfiscal and shall not be considered in computing any levy when the annual estimate is made to the County Excise Board.

Section 4. APPROPRIATIONS. The City of Piedmont & Piedmont Municipal Authority, Oklahoma, is hereby authorized to incur the necessary expenses for the establishment, operation, and administration of the System, and to appropriate and pay the same. In addition, the City of Piedmont & Piedmont Municipal Authority, Oklahoma, is hereby authorized to appropriate annually such amounts as are required in addition to employee contributions to maintain the System and the Fund in accordance with the provisions of the Defined Benefit Plan. Any appropriation so made to maintain the System and Fund shall be for deferred wages or salaries, and for the payment of necessary expenses of operation and administration to be transferred to the trustees of the Oklahoma Municipal Retirement Fund for such purposes and shall be paid into the Fund when available, to be duly transferred to the Oklahoma Municipal Retirement Fund.

Section 5. SPECIAL INCOME TAX TREATMENT FOR CONTRIBUTIONS UNDER IRC414. The Plan contains provisions which are intended to constitute a pick-up program by the Employer which satisfies the requirements of section 414(h)(2) of the Internal Revenue Code of 1986 (the "Code"); and the Plan, be, and it is, approved and adopted as of the date therein stated; and Mandatory Contributions (as defined in the Plan) are designated "picked-up" by the employer so as to not be included in Plan Participants' gross income for Federal income tax purposes as provided in Section 414(h)(2) of the Code. All Mandatory Contributions are to be paid by the employer in lieu of contributions by the Plan Participant. No Participant in the Plan shall have the option of choosing to receive the amounts of Mandatory Contributions directly in lieu of having such amounts paid by the employer to the Trustees of the Plan.

Section 6. EXECUTION. The Mayor and City Clerk be and they are each hereby authorized and directed to execute (in counterparts, each of which shall constitute an original) the System instrument, and to do all other acts and things necessary, advisable, and proper to put said System and related trust into full force and effect, and to make such changes therein as may be necessary to qualify the same under Sections 401(a) and 501(a) of the Internal Revenue Code of the United States. The counterpart attached hereto as Exhibit "A" and Exhibit "B", which has been duly executed as aforesaid simultaneously with the passage of this Ordinance and made a part hereof, is hereby ratified and confirmed in all respects.

This Committee is hereby authorized and directed to proceed immediately on behalf of the City of Piedmont & Piedmont Municipal Authority, Oklahoma, to pool and combine the Fund into the Oklahoma Municipal Retirement Fund as a part thereof, with similar funds of such other cities and towns, for purposes of pooled management and investment.

Section 7. REPEALER. Any Ordinance inconsistent with the terms and provisions of this Ordinance is hereby repealed, provided, however, that such repeal shall be only to the extent of such inconsistency and in all other respects this Ordinance shall be cumulative of other ordinances regulating and governing the subject matter covered by this Ordinance.

Section 8. SEVERABILITY. If, regardless of cause, any section, subsection, paragraph, sentence or clause of this Ordinance, including the System as set forth in Exhibit "A" and Exhibit "B", is held invalid or to be unconstitutional, the remaining sections, subsections, paragraphs, sentences, or clauses shall continue in full force and effect and shall be construed thereafter as being the entire provisions of this Ordinance.

Section 9. EMERGENCY. Whereas, in the judgment of the City Council of the City of Piedmont & Piedmont Municipal Authority, Oklahoma, the public peace, health, safety, and welfare of the City of Piedmont & Piedmont Municipal Authority, Oklahoma, and the inhabitants thereof demand the immediate passage of this Ordinance, an emergency is hereby declared, the rules are suspended, and this Ordinance shall be in full force and effective on its passage, approvals and publication.

*****END*****

The undersigned hereby certifies that the foregoing Ordinance was introduced before the City Council of the City of Piedmont & Piedmont Municipal Authority on the 28 day of May, 2013, and was duly adopted and approved by the Mayor and City Council, on the 28 day of May, 2013, after compliance with notice requirements of the Open Meeting Law (25 OSA, Sections 301, et. seq.).

City of Piedmont & Piedmont Municipal Authority

By Patricia Thomerson
Mayor

ATTEST:

Jennifer Smith
Clerk

Approved as to form and legality on _____, _____.

CITY ATTORNEY

OKLAHOMA MUNICIPAL RETIREMENT FUND
MASTER DEFINED BENEFIT PLAN
JOINDER AGREEMENT

City of Piedmont & Piedmont Municipal Authority, a city, town, agency, instrumentality, or public trust located in the State of Oklahoma, with its principal office at Piedmont, Oklahoma, hereby establishes a Defined Benefit Plan to be known as **City of Piedmont & Piedmont Municipal Authority Plan** (the "Plan") in the form of The Oklahoma Municipal Retirement Fund Master Defined Benefit Plan.

Except as otherwise provided herein, the definitions in Article II of the Plan apply.

1. **Dates.**
   [X] **This instrument is a new Plan effective July 1, 2013.**
   [ ] This instrument is an amendment, restatement and continuation of the Previous Plan, which was originally effective _____. The effective date of this Joinder Agreement is _____, except as otherwise stated in the Plan and the Joinder Agreement.
2. **Employee.**
   The word "Employee" shall mean:
   [X] **Any person other than a Leased Employee who, on or after the Effective Date, is considered to be a regular full-time employee in accordance with the Employer's standard personnel policies and practices, and is receiving remuneration for such services rendered to the Employer (including any elected official and any appointed officer or employee of any department of the Employer, whether governmental or proprietary in nature), including persons on Authorized Leave of Absence. Employees shall not include independent contractors. Elected members of the City Council shall not be considered to be Employees solely by reason of their holding such office.**
   [ ] Any person other than a Leased Employee who, on or after the Effective Date, is considered to be a regular employee in accordance with the Employer's standard personnel policies and practices (including part-time, seasonal and temporary employees), and is receiving remuneration for such services rendered to the Employer (including any elected official and any appointed officer or employee of any department of the Employer, whether governmental or proprietary in nature), including persons on Authorized Leave of Absence. Employees shall not include independent contractors. Elected members of the City Council shall not be considered to be Employees solely by reason of their holding such office.
   [ ] Any person who, on or after the Effective Date, is an employee of the Employer and is .
   The word "Employee" shall not include:
   [X] **Any person who is currently accruing benefits under any other state or local retirement system.**
   [X] **Any person who is in the position of City Manager and is currently accruing benefits under another retirement system which has been approved by the City Council.**
3. **Eligibility.**
   Eligible Employees shall commence participation in the Plan: (Select only one)
   [ ] _ month(s) (any number of months up to twelve consecutive) after the Employee's Employment Commencement Date.
   [X] **On the Employee's Employment Commencement Date.**
4. **Definition of Compensation.**
   Compensation shall exclude the item(s) listed below:
   [ ] No exclusions.
   [ ] Overtime pay.
   [ ] Bonuses.
   [ ] Commissions.
   [X] **Severance pay.**
   [ ] Fringe benefits, expense reimbursements, deferred compensation and welfare benefits.
   [X] **Other: Accrued vacation or sick leave paid upon termination of employment and moving expenses.**

5. **Average Monthly Compensation.**
The considered period for purposes of the definition of "Average Monthly Compensation" in Section 2.1 of The Oklahoma Municipal Retirement Fund Master Defined benefit Plan is:
[X] **sixty (60) consecutive months.**
[ ] thirty-six (36) consecutive months.

6. **The Employer hereby elects the following Plan design:**
[X] **Mandatory Contribution Option. An Employee shall be required to contribute to the Plan for each Plan Year the percentage of his Compensation ("Mandatory Contributions") required by the Plan. Mandatory Contributions shall be made by payroll deductions. An Employee shall authorize such deductions in writing on forms approved by, and filed with, the Committee.**

If the Employee's contributions are to be taxed deferred:
[X] **Pick-Up Option. The Employer hereby elects to have the provisions of Section 3.4 of the Plan apply. The Employer shall pick-up and pay the percentage of each Participant's Compensation required to be contributed as of July 1, 2013 in lieu of contributions by the Participant. No Participant shall have the option of receiving the contributed amounts directly as Compensation.**

[ ] Non-Contributory Option. Participants shall not be required nor permitted to contribute to the Plan.

7. A. **Payment Options.** The Employer hereby elects the following minimum number of payments for employees eligible to receive benefits under Article IV of the Plan:
[X] **Sixty (60) monthly payments.**
[ ] One hundred and twenty (120) monthly payments.

B. **Plan Options.** The Employer hereby elects the following plan designation and percentage used in calculating benefits under Section 5.1 of the Plan.
[ ] Plan AAA - 3% with no maximum Years of Service
[ ] Plan AAA - 3% recognizing a maximum of 22 Years of Service
[ ] Plan AA - 2.625%
[ ] Plan BB - 2.25%
[ ] Plan CC - 1.875%
[X] **Plan A - 1.5%**
[ ] Plan B - 1.125%
[ ] Plan C - .75%

C. **Normal Retirement Age.** Normal retirement age shall be:
[X] **Age 65**
[ ] The earlier of (i) and (ii) as follows:
(i) age 65
(ii) the later of age 62 and the age at which the Participant has completed 30 years of service.
Examples: An employee hired at age 20 who worked for 30 years and terminated at age 50 would be entitled to unreduced payments at age 62.
An employee hired at age 30 who worked for 25 years and terminated at age 55 would be entitled to unreduced payments at age 65.
[ ] Modified Rule of 80:
The earlier of (i) and (ii) as follows:
(i) age 65
(ii) the later of age 55 and the age at which the sum of the Participant's age in completed years and the participant's number of completed years of credited service total 80 or greater. To be eligible, the Participant's age plus service must be at least 80 prior to termination of employment.

Examples: 1. An employee hired at age 30 who worked for 25 years and terminated at age 55 would be entitled to unreduced payments immediately. Age 55 plus 25 years equals 80.

2. An employee hired at age 20 who worked for 30 years and terminated at age 50 would be entitled to unreduced payments at age 55. The employee has age plus service points at age 50 but the minimum age for payment is 55.

3. An employee hired at age 25 who worked for 25 years and terminated at age 50 would be entitled to unreduced payments at age 65. Age 50 plus 25 years is less than 80, so the Normal Retirement Age is 65.

D. Vesting Options. The Employer hereby elects the following vesting option to determine an Employee's eligibility to receive retirement benefits.

[X] **Ten Year Cliff Vesting Schedule**
[ ] Seven Year Cliff Vesting Schedule
[ ] Five Year Cliff Vesting Schedule

E. Service Credit Prior to Original Plan Effective Date. The Employer hereby elects to include the following limitation of service prior to the original Plan effective date.

[X] **No limitation**
[ ] Service credit prior to the original Plan effective date shall not exceed ___ years.

F. Service Buyback. The Employer hereby elects

[X] **No service buyback pursuant to Section 10.13 of the Plan**
[ ] The service buyback provisions of Section 10.13 of the Plan.

G. Service for Worker's Compensation Period. If a Participant is on an Authorized Leave of Absence and is receiving worker's compensation during such Authorized Leave of Absence, such Participant

[X] **shall be credited with Service for such period for purposes of vesting only and not for purposes of benefits, but no Employee contributions shall be made with respect to the Participant for such period.**
[ ] shall not be credited with Service for such period.

8. Contributions by Employees.

If Employees are required to contribute to the cost of providing benefits under this Plan, such contributions shall be based on the plan designation selected in Section 7B above and shall apply to pay periods commencing on and after **July 1, 2013**.

a. [X] **The Employee contribution formula in Section 3.3 of the Plan shall use the following maximum percentage for the Plan Option selected in Section 7B of this Joinder Agreement:**

Plan AAA – 6.0%
Plan AA - 5.25%
Plan BB - 4.5%
Plan CC - 3.75%
Plan A - 3%
Plan B - 2.25%
Plan C - 1.5%

b. [ ] The contribution formula shall be % of compensation. (Not to exceed the percentages in above paragraph).

c. [ ] The contribution as annually determined each year shall be shared by the Employee and Employer as follows:

Employee portion %
Employer portion %

(Employee plus Employer percentages must total 100%.)

The contribution will be actuarially determined based on Plan assets and liabilities as of January 1 of each year as a percent of payroll, which will then be shared between the Employer and Employee as

noted above. These contribution rates will be in effect from July 1 of that year until June 30 of the subsequent year.

9. **Cost-of-Living Option.**
For purposes of adjusting retiree and beneficiary pensions, the Employer hereby elects the following:
[X] **No Cost-of-Living Option.**
[ ] Cost-of-Living Option. This election applies to Sections 5.1 (Normal Pension), 5.4 (Deferred Vested Pension), 6.3A and 6.3B (Death After Commencement of Pension), and 6.4 (Spouse's Pension) and provides annual benefit increases of the smaller of three percent (3%) or the percentage change in the Consumer Price Index.
The effective date of the Cost-Of-Living Option shall be _, the original date that the Employer elected the Cost-Of-Living Option.

10. **Retiree Plan Improvement Option.**
Benefits payable to or on behalf of a former Employee under Article V, Article VI, or Article VII of the Plan, which are due or in the course of payment of the Effective Date of this Joinder Agreement, shall
[ ] be increased according to the Plan Option elected herein. Such increased benefits shall be reflected in any periodic payments due or paid on or after the Effective Date of the Joinder Agreement. It is not intended for this change to be retroactive and any periodic payments due prior to such date shall not be affected.
[ ] be increased by _%_ effective ___. Such increased benefits shall be reflected in any periodic payments due or paid after such date. It is not intended for this change to be retroactive and any periodic payments due prior to such date shall not be affected.
[X] **not be increased, but shall continue to be paid under the terms of the Previous Plan.**

11. **Limitations on Optional Benefit Forms.**
Section 7.2 of the Plan provides for a lump sum payment form, an installment payment form that would be payable over a fixed number of years (at which time all payments would cease), or the purchase of an insured annuity. The Employer hereby elects the following:
[X] **Optional benefit forms under Section 7.2 of the Plan will not be permitted.**
[ ] Optional benefit forms under Section 7.2 of the Plan will be permitted, subject to Retirement Committee approval for any such elections by an Employee, subject to the following limitation(s):

(The above election has no effect on the joint and survivor optional benefit forms under Section 7.1).

12. **Defined Contribution Option.**
[X] **Not applicable.**
[ ] Participant shall be entitled to the benefit under this option, in addition to the benefit determined according to Section 7B.

An account shall be created for each active Participant as of the effective date of the option. The beginning balance of the account shall be the Participant's Contribution Accumulation. The account shall be credited with:
(1) Mandatory Contributions made by the Participant after the effective date of the option.
(2) Investment earnings at same rate as earned by the Oklahoma Municipal Retirement Fund (OMRF) Defined Benefit Fund.
As soon as administratively possible after termination of employment or death, the administrator shall pay the Participant or Beneficiary if applicable, the account balance. The Participant may elect to receive the benefit in any of the Benefit options permitted under the plan. The benefit shall be the Actuarial Equivalent of the account balance at the time the benefit commences.

The administrator shall determine the method of determining the investment earnings and the date such investment earnings are credited.

This option shall be effective __.

13. The Employer has consulted with and been advised by its attorney concerning the meaning of the provisions of the Plan and the effect of entry into the Plan.

IN WITNESS WHEREOF **City of Piedmont & Piedmont Municipal Authority** has caused its corporate seal to be affixed hereto and this instrument to be duly executed in its name and behalf by its duly authorized officers this 28 day of May 2013

City of Piedmont & Piedmont Municipal Authority

By: Valerie Thomason

Title: Mayor

Attest:

Jennifer Smith

Title: City Clerk

(SEAL)

CITY OF PIEDMONT OKLAHOMA Corporate SEAL OKLAHOMA

14. The foregoing Joinder Agreement is hereby approved by the Oklahoma Municipal Retirement Fund this 28 day of June 2013.

OKLAHOMA MUNICIPAL RETIREMENT FUND

By: George Wilkinson

Title: Chairman

Attest:

Bettie Ann Young

Secretary

(SEAL)

OKLAHOMA MUNICIPAL RETIREMENT FUND OFFICIAL SEAL OKLA.

AN ORDINANCE OF THE **CITY OF PIEDMONT & PIEDMONT MUNICIPAL AUTHORITY,** OKLAHOMA

ORDINANCE NO. 584

AN ORDINANCE AMENDING THE EMPLOYEE RETIREMENT SYSTEM, **DEFINED CONTRIBUTION PLAN FOR THE CITY OF PIEDMONT & PIEDMONT MUNICIPAL AUTHORITY,** OKLAHOMA; PROVIDING RETIREMENT BENEFITS FOR ELIGIBLE EMPLOYEES OF THE **CITY OF PIEDMONT & PIEDMONT MUNICIPAL AUTHORITY,** OKLAHOMA; PERTAINING TO THE DEFINTION OF COMPENSATION; PERTAINING TO PLAN DESIGN; PROVIDING FOR REPEALER AND SEVERABILITY; AND DECLARING AN EMERGENCY.

BE IT ORDAINED BY CITY COUNCIL OF THE CITY OF PIEDMONT & PIEDMONT MUNICIPAL AUTHORITY, OKLAHOMA.

Section 1. **AMENDATORY.** The Employee Retirement System, Defined Contribution Plan, of the **City of Piedmont & Piedmont Municipal Authority,** Oklahoma, is hereby amended as reflected on the attached Exhibit "A", which is incorporated herein and adopted by reference. These amendments shall become effective on **July 1, 2013.**

Section 2. **EXECUTION AUTHORIZATION.** The City Clerk and Mayor be and they are hereby authorized and directed to execute the amended Retirement System Plan documents and to do all the other acts necessary to put said amendment into effect and to maintain IRS qualification of the Plan. The executed amended document attached hereto as Exhibit "A" is hereby ratified and confirmed in all respects.

Section 3. **SEVERABILITY.** If, regardless of cause, any section, subsection, paragraph, sentence, or clause of this ordinance, including the System as set forth in Exhibit "A" is held invalid or to be unconstitutional, the remaining sections, subsections, paragraphs, sentences, or clauses shall continue in full force and effect and shall be construed thereafter as being the entire provisions of this ordinance.

Section 4. **REPEALER.** Any ordinance inconsistent with the terms and provisions of this ordinance is hereby repealed; provided, however, that such repeal shall be only to the extent of such inconsistency and in all other respects this ordinance shall be cumulative of other ordinances regulating and governing the subject matter covered by this ordinance.

Section 5. **EMERGENCY.** Whereas, in the judgment of the City Council of the **City of Piedmont & Piedmont Municipal Authority,** Oklahoma, the public peace, health, safety, and welfare of the **City of Piedmont & Piedmont Municipal Authority,** Oklahoma, and the inhabitants thereof demand the immediate passage of this ordinance, an emergency is hereby

declared, the rules are suspended, and this ordinance shall be in full force and effect on its passage and approval.

END

The foregoing ordinance was introduced before the City Council on the 28 day of May 2013, and was duly adopted and approved by the Mayor and City Council on the 28 day of May, 2013, after compliance with notice requirements of the Open Meeting Law (25 OSA, Section 301, et seq.).

Tatonia Thompson
MAYOR

ATTEST:

Jennifer Smith
CITY CLERK

Approved as to form and legality on _____, _____.

CITY ATTORNEY

OKLAHOMA MUNICIPAL RETIREMENT FUND
MASTER DEFINED CONTRIBUTION PLAN
JOINDER AGREEMENT

City of Piedmont & Piedmont Municipal Authority, a city, town, agency, instrumentality, or public trust located in the State of Oklahoma, with its principal office at Piedmont, Oklahoma, hereby establishes a Defined Contribution Plan to be known as the **City of Piedmont & Piedmont Municipal Authority Plan** (the "Plan") in the form of the Oklahoma Municipal Retirement Fund Master Defined Contribution Plan.

Except as otherwise provided herein, the definitions in Article II of the Plan apply.

1. Dates.

[ ] This instrument is a new Plan effective _____.

[X] This instrument is an amendment, restatement and continuation of the Previous Plan, which was originally effective March 6, 1997. The effective date of this Joinder Agreement is **July 1, 2013**, except as otherwise stated in the Plan and the Joinder Agreement

2. Employee.

The word "Employee" shall mean:

[X] Any person, other than a Leased Employee, who, on or after the Effective Date, is considered to be a regular full-time employee in accordance with the Employer's standard personnel policies and practices, and is receiving remuneration for such services rendered to the Employer (including any elected official and any appointed officer or employee of any department of the Employer, whether governmental or proprietary in nature), including persons on Authorized Leave of Absence. Employees shall not include independent contractors. Elected members of the City Council shall not be considered to be Employees solely by reason of their holding such office.

[ ] Any person, other than a Leased Employee, who, on or after the Effective Date, is considered to be a regular employee in accordance with the Employer's standard personnel policies and practices (including part-time, seasonal and temporary employees), and is receiving remuneration for such services rendered to the Employer (including any elected official and any appointed officer or employee of any department of the Employer, whether governmental or proprietary in nature), including persons on Authorized Leave of Absence. Employees shall not include independent contractors. Elected members of the City Council shall not be considered to be Employees solely by reason of their holding such office.

[ ] Any person who, on or after the Effective Date, .

The word "Employee" shall not include:

[X] Any person who is currently accruing benefits under any other state or local retirement system.

[X] Any person who is in the position of City Manager if covered under another retirement program approved by the Retirement Committee.

3. Entry Date.

Eligible Employees shall commence participation in the Plan: (Select only one)

[ ] __ months (any number of months up to twelve) after the later of the Employee's Employment Commencement Date or the date the definition of Employee shown above was met.

[X] On the Employee's Employment Commencement Date. (If the Employer has opted out of Old Age and Disability Insurance (OADI), this option must be elected).

4. Definition of Compensation.

Compensation shall exclude the item(s) listed below:

[ ] No exclusions.

[ ] Overtime pay.

[ ] Bonuses.

[ ] Commissions.

[X] **Severance pay.**

[ ] Fringe benefits, expense reimbursements, deferred compensation and welfare benefits.

[X] **Other: Accrued vacation or sick leave paid upon termination of employment and moving expenses.**

5. Plan Design.

The Employer hereby elects the following Plan design:

[ ] Pick-up Option. Each Employee shall be required to contribute to the Plan % of his or her Compensation. These contributions shall be picked up and assumed by the Employer and paid to the Fund in lieu of contributions by the Participant. No Participant shall have the option of receiving the contributed amounts directly as Compensation.

[ ] Thrift Plan Option.

- [ ] A Participant may elect to contribute to the Plan for each Valuation Period an amount which is at least 1%, but no more than % of his Compensation ("Mandatory Contributions"). Mandatory Contributions shall be made by payroll deductions. A Participant shall authorize such deductions in writing on forms approved by, and filed with the Committee.
- [ ] The Employer shall contribute to the Fund an amount equal to % of the total Mandatory Contributions contributed by Participants.
  The Employer contribution together with amounts forfeited, if any, shall be allocated in the proportion which the Mandatory Contributions of each such Participant for such Valuation Period bear to the total Mandatory Contributions contributed by all such Participants for such Valuation Period.
- [ ] The Employer shall not contribute to the Fund a percentage of the total Mandatory Contributions contributed by Participants.

[ ] Fixed Contribution. The Employer shall contribute to the Fund an amount which when added to amounts available from Amounts Forfeited in prior periods, if any, shall equal % of the total covered Compensation of all Participants for the Valuation Period. The Employer contribution together with amounts available from Amounts Forfeited in prior periods shall be allocated in the proportion which the Compensation of each such Participant for such Valuation Period bears to the Compensation paid to all such Participants for such Valuation Period.

[ ] Variable Funding Option.

- [ ] The Employer intends to make a contribution to the Plan for the benefit of the Participants for each Valuation Period. The contribution may be varied from year to year by the Employer. (Select one option below)
  - [ ] Option A: The Employer contribution together with Amounts Forfeited, if any, shall be allocated in the proportion that each such Participant's total points awarded bear to the total points awarded to all Participants with respect to such year. A Participant shall be awarded one point for each Year of Service.
  - [ ] Option B: The Employer contribution together with Amounts Forfeited, if any, shall be allocated in the proportion which the Compensation of each such Participant for such Valuation Period bears to the Compensation paid to all such Participants for such Valuation Period.
  - [ ] Option C: A combination of Options A and B in the following ratios: % for Option A, and % for Option B.

[ ] 401(k) Funding Option.

(This Option available only if elected prior to May 1, 1986)

- [ ] Participant Deferral Elections shall be allowed under the provisions of Section 4.9 of the Plan. Participants shall be allowed to defer no more than % of their Compensation for each election period. The election period shall be the one month period preceding each [ ] Valuation Period [ ] calendar quarter of the Valuation Period.
- [ ] Section 4.9(c) of the Plan ("Roth Elective Deferrals") shall apply to contributions after (enter a date later than January 1, 2006), and the Plan will accept a direct rollover from another Roth elective deferral account under an applicable retirement plan as described in Code Section 402A(e)(1).

[X] No Employer Contribution Option.

6. **Other Participant Contribution Options.**

[X] Voluntary Nondeductible Contributions by Participants shall be allowed under the provisions of Section 4.5 of the Plan.
[ ] A Participant may not withdraw Voluntary Nondeductible Contributions.
[ ] Participants shall not contribute to the Plan.

7. **Self-Directed Investments.**
[X] Are permitted.
[ ] Are not permitted.

8. **Allocation of Forfeitures Available.**
[X] Shall be added to Employer contribution.
[ ] Shall reduce the Employer contribution.

9. **Service for Worker's Compensation Period.**
If a Participant is on an Authorized Leave of Absence and is receiving worker's compensation during such Authorized Leave of Absence, such Participant
[X] shall be credited with Service for such period for purposes of vesting only and not for purposes of allocations of Employer Contributions.
[ ] shall not be credited with Service for such period.

10. **Vesting.**
For purposes of vesting under Section 6.4 of the Plan, the Employer hereby elects the following Option:

[X] Option A

Years of Service	Vested Percentage	Forfeited Percentage
less than 1	0%	100%
at least 1 but less than 2	10%	90%
at least 2 but less than 3	20%	80%
at least 3 but less than 4	30%	70%
at least 4 but less than 5	40%	60%
at least 5 but less than 6	50%	50%
at least 6 but less than 7	60%	40%
at least 7 but less than 8	70%	30%
at least 8 but less than 9	80%	20%
at least 9 but less than 10	90%	10%
10 or more	100%	0%

[ ] Option B

Years of Service	Vested Percentage	Forfeited Percentage
Less than 3	0%	100%
at least 3 but less than 4	20%	80%
at least 4 but less than 5	40%	60%
at least 5 but less than 6	60%	40%
at least 6 but less than 7	80%	20%
7 or more	100%	0%

[ ] Option C

Years of Service	Vested Percentage	Forfeited Percentage
less than 5	0%	100%
at least 5 but less than 6	50%	50%
at least 6 but less than 7	60%	40%
at least 7 but less than 8	70%	30%
at least 8 but less than 9	80%	20%
at least 9 but less than 10	90%	10%
10 or more	100%	0%

[ ] Option D

Years of Service	Vested Percentage	Forfeited Percentage

[ ] Option E
To comply with the Internal Revenue Service Regulations promulgated pursuant to the Code Section 3121(b)(7)(F), Participants who are part-time, seasonal or temporary Employees will have immediate vesting.
(If this Option E is elected, one of the other Options above must also be elected for Participants who are not part-time, seasonal or temporary Employees).

11. Participant Loans.

[X] Participant loans shall be offered pursuant to Section 6.14 of the Plan.

[ ] Participant loans shall not be offered.

---

12. The Employer has consulted with and been advised by its attorney concerning the meaning of the provisions of the Plan and the effect of entry into the Plan.

IN WITNESS WHEREOF **City of Piedmont & Piedmont Municipal Authority** has caused its corporate seal to be affixed hereto and this instrument to be duly executed in its name and behalf by its duly authorized officers this 28 day of May 2013

City of Piedmont & Piedmont Municipal Authority

By: Patricia Thomerson

Title: Mayor

Attest:

Title:

(SEAL)

---

13. The foregoing Joinder Agreement is hereby approved by the Oklahoma Municipal Retirement Fund this 28 day of June 2013.

OKLAHOMA MUNICIPAL RETIREMENT FUND

By: George Walkinson

Title: Chairman

Attest:

Secretary

(SEAL)

1. DISPOSITION TABLE

Ord. No.	Date	Subject	Disposition**
195	9/24/84	Oil and gas regulatons	
213	4/22/85	Compensation for councilmembers	
254	1/26/87	Ward boundaries	
255	9/28/87	Oil and gas regulation amendment	
259	11/23/87	Impounding of dogs and cats.	
260	12/28/87	Fire Department members to equip personal vehicles with emergency equipment.	
261	12/28/87	Prohibits certain activities on premises of establishments selling non-intoxicating beverages.	
262	1/25/88	Amends zoning ordinance pertaining to keeping larger animals on 1 to 5 acre tracts.	
263	2/22/88	Child passenger restraint system.	
264	4/25/88	Impoundment of motor vehicles.	
265	7/25/88	Plan for personnel administration.	
266	8/22/88	Abatement of nuisances, grass, weeds, trash and dilapidated buildings.	

**Section numbers refer to the Code of Piedmont. S = Superseded by a later ordinance; R = Repealed; NC = Not Codified; Spec. Ords. = Listing of special ordinances in tables.

Ord. No.	Date	Subject	Disposition**
267	9/26/88	Purchase and disposal of equipment by city manager.	
268	9/26/88	Adoption of BOCA building code.	
269	9/26/88	Adoption of BOCA plumbing code.	
270	9/26/88	Adoption of BOCA mechanical code.	
271	9/26/88	Adoption of BOCA national existing structures code.	
272	9/26/88	Adoption of BOCA national fire prevention code.	
273	11/28/88	Municipal judge to establish minimum fine schedule.	
274	12/27/88	911 emergency telephone service	
276	1/23/89	Alarm systems not to be used with 911 emergency system.	
277	4/24/89	Regulating alarm systems.	
278	6/26/89	Regarding vicious, dangerous and diseased animals, complaints and impoundment.	
279	6/26/89	Deannexing.	
280	1/22/90	Rezoning.	
281	1/22/90	Changing zoning ordinance regarding rezoning requests.	

**Section numbers refer to the Code of Piedmont. S = Superseded by a later ordinance; R = Repealed; NC = Not Codified; Spec. Ords. = Listing of special ordinances in tables.

Piedmont Disposition Table

Ord. No.	Date	Subject	Disposition**
282	1/22/90	Regulating operation of motor vehicles on roads, streets and highways that form boundary lines of city.	
283	6/25/90	Adding $7.00 to fee/bond schedule for CLEET and AFIS funds.	
284	8/27/90	2% tax on gross receipts of sale of electricity.	
285	10/22/90	Rezoning	
286	10/22/90	Rezoning	
287	12/17/90	Amending zoning regulations on commercial zoning and parking	
288	4/9/91	Amending zoning regulations on mobile homes in agricultural districts	
289	2/25/91	Amending zoning regulations on mobile homes as special use in agricultural district, amending commercial zoning district	
290	3/25/91	Open records regulations and procedures	
291	3/25/91	Rezoning	
292	5/28/91	Leasing water and sewer systems to Municipal Authority	
293	6/24/91	Absentee ballots in municipal elections	
294	10/28/91	Closing public way (2nd street)	
295	1/6/92	Amending subdivision regulations, plats, procedures, approval, standards	
296	1/6/92	Creating RE-1 and RE-2 districts in the Rural Estate Residential District	

**Section numbers refer to the Code of Piedmont. S = Superseded by a later ordinance; R = Repealed; NC = Not Codified; Spec. Ords. = Listing of special ordinances in tables.

Piedmont Disposition Table

Ord. No.	Date	Subject	Disposition**
297	1/27/92	Sales tax amendments, increasing from 2 to 4%	
298		Tabled	
299	2/24/92	Rezoning	
300	2/24/92	Rezoning	
301	4/27/92	Rezoning	
302	5/1/92	RE-1, RE-2 and RS-1 amendments (rural residential estates), re: lot width requirements	
303	5/1/92	Rezoning	
304	6/22/92	Ward boundaries, revisions	
305	6/22/92	Rezoning	
306	6/22/92	Rezoning	
307	6/22/92	Excise tax amendments, from 2 to 4%	
308	7/27/92	Traffic rules, drivers license and adopting state traffic code	
309	8/24/92	911 emergency telephone fee rate, 3%	
310	8/28/92	BOCA Fire Prevention Code amendments	
311	12/28/92	Street types and classifications, right of way requirements, construction specifications (amending zoning and subdivision regulations)	
312	12/28/92	Utility tax of 2% on gas utilities' sales	
313		Tabled	
314	1/25/93	Utility tax of 2% on gas utilities' sales	
315	5/24/93	Rezoning	

**Section numbers refer to the Code of Piedmont. S = Superseded by a later ordinance; R = Repealed; NC = Not Codified; Spec. Ords. = Listing of special ordinances in tables.

Ord. No.	Date	Subject	Disposition**
316	9/27/93	Subdivision regulation amendments	
317	7/26/93	Oil and gas inspection fee (from $250 to $270)	
318		Rezoning	
319	12/27/93	Building permit charges	
320	12/27/93	Adopting revised comprehensive land use plan	
321	1/24/94	Adopting street construction specifications	

**Section numbers refer to the Code of Piedmont. S = Superseded by a later ordinance; R = Repealed; NC = Not Codified; Spec. Ords. = Listing of special ordinances in tables.

Piedmont Disposition Table

LISTING OF CERTAIN SPECIAL ORDINANCES

Part 1 Ordinances Annexing Territory to, or Excluding Territory from, the City

Part 2 Ordinances Opening or Vacating Streets and Alleys

Part 3 Zoning Ordinance Map Amendments

Part 4 Other Special Ordinances*

LISTING OF CERTAIN SPECIAL ORDINANCES

Part 1

Ordinances Annexing Territory to, or Excluding Territory From, the City

Ord. No.	Date	Subject
279	6/26/89	Deannexing.

*Other Special Ordinances include: (1) Granting the right to use streets; (2) Special election calls; (3) Bond issues; (4) Acceptance of beneficial interest in public trusts; (5) Other special or temporary ordinances. Where applicable, some of these special ordinances may be referred to in the text of the code of ordinances as well.

Part 2

Ordinances Opening or Vacating

Streets and Alleys

Ord. No.	Date	Subject
294	10/28/91	Closing public way (2nd street)

*Other Special Ordinances include: (1) Granting the right to use streets; (2) Special election calls; (3) Bond issues; (4) Acceptance of beneficial interest in public trusts; (5) Other special or temporary ordinances. Where applicable, some of these special ordinances may be referred to in the text of the code of ordinances as well.

Part 3

Zoning Ordinance Map Amendments

Ord. No.	Date	Subject
280	1/22/90	Rezoning.
285	10/22/90	Rezoning
286	10/22/90	Rezoning
291	3/25/91	Rezoning
299	2/24/92	Rezoning
300	2/24/92	Rezoning
301	4/27/92	Rezoning
303	5/1/92	Rezoning
305	6/22/92	Rezoning
306	6/22/92	Rezoning
315	5/24/93	Rezoning

*Other Special Ordinances include: (1) Granting the right to use streets; (2) Special election calls; (3) Bond issues; (4) Acceptance of beneficial interest in public trusts; (5) Other special or temporary ordinances. Where applicable, some of these special ordinances may be referred to in the text of the code of ordinances as well.

Part 4

Other Special Ordinances*

Ord. No.	Date	Subject

*Other Special Ordinances include: (1) Granting the right to use streets; (2) Special election calls; (3) Bond issues; (4) Acceptance of beneficial interest in public trusts; (5) Other special or temporary ordinances. Where applicable, some of these special ordinances may be referred to in the text of the code of ordinances as well.

DISPOSITION TABLE
2003 SUPPLEMENT

Ordinance No.	Date Adopted	Disposition in Code
380 (Flood Regulations)	10/25/99	Part 12, Chapter 6
381 (amend Retirement System	09/27/99	Appendix
382 (A-1 setbacks)	01/11/00	ZO, Chapter 4
383 (Penalty–$500)	03/27/00	1-108
384 (Adopting revised Code)	01/24/00	Appendix
385 (jury trials)	03/27/00	Part 6, Chapter 3
386 (Rezoning ordinance)	not adopted	
387 (Personnel regulations)	0424/00	2-410(3)
388 (Rezoning ordinance, 35-14-5)	04/24/00	Appendix
389 (Rezoning ordinance, 26-14-5)	06/26/00	Appendix
390 (Personnel–holidays)	07/24/00	2-410(2)
391 (Inmates pay jail costs)	10/23/00	6-134
392 (Landscape Requirements, etc.)	10/23/00	ZO 6-8, 4-1, 5-3.6
393 (Tobacco use)	11/27/00	10-516, 10-517
394 (Flood Regulations)	12/18/00	12-603, 12-604
395 (Curfew)		Part 10, Chapter 5, 10-517
396 (Rezoning ordinance 16-14-5)	03/23/01	Appendix
397 (Platting procedures)	06/25/01	Chapter 2. Subdivision Regs
398 (Street standards)	06/25/01	Part 14, Chapter
399 (Retirement Plan amendment)	06/25/01	Appendix
400 (Personnel–vacation, sick leave)	06/25/01	2-410(3)
401 (Lots, 5 acres)	07/23/01	1-4.A Subdivision Regs
402 (Rezoning ordinance, 34-14-5)	07/23/01	Appendix
403 (Retirement System)	07/23/01	Appendix
404 (Retirement System)	07/23/01	Appendix
405 (Drunk driving–BAC .08)	7/23/01	15-520
406 (Forensic fee)	07/23/01	6-132
407 (Purchasing limits)	Not adopted	
408 (Rezoning ordinance, 5-14-5)	11/26/01	Appendix
409 (Purchasing Procedures)	11/26/01	Part 7, Chapter 2
410 (Rezoning ordinance, Block 34, Piedmont)	02/25/02	Appendix
411 (Ward boundaries)	05/28/02	1-302
412 (Siteplan Approval)	04/22/02	ZO 7-2.1
413 (Facades)	Not adopted	
414 (Commercial facades)	05/28/02	ZO 5-3A
415 (Tracts, 5 acres–right-of-way)	05/28/02	1-4 Subdivision Regs
416 (Fireworks)	05/28/02	10-328
417 (Emergency Management)	05/28/02	13-304

418 (Rezoning ordinance, 17-14-5)	05/28/02	Appendix
419 (Manufactured housing)	Pending adoption	
420 (Fireworks)	06/27/02	10-328
421 (Rezoning ordinance, 17-14-5)	Not adopted.	
422 (Rezoning ordinance, Lot 20, Blk 59, Piedmont)	09/23/02	Appendix
423 (Retirement Plan)	08/26/02	Appendix
424 (Rezoning ordinance, 29-14-5)	10/28/02	Appendix
425 (Site-proof fencing)	04/28/03	ZO 5-13
426 (Rezoning ordinance, 3-14-5)	01/27/03	Appendix
427 (Nuisances)	01/27/03	Part 8, Chapter 4
428 (Library Board)	02/24/03	Part 11, Chapter 3

ZO = Zoning Ordinance

DISPOSITION TABLE 11/2006

Ord. No.	Subject	Date Adopted	Disposition
429	Retirement System	03/24/2003	NC
430	Retirement System	03/24/2003	NC
431	Rezoning (Lots 1-8, & 17-24, Block 76)	05/27/2003	ZO
432	Rezoning (Sec. 34-14-5)	05/27/2003	ZO
433	Rezoning (Sec. 32-14-5)	07/28/2003	ZO
434	Adoption of Code and Supplement No. 2	06/13/2003	NC
435	Sign Regulations	07/28/2003	ZO (Chap. 3)
436	Not used		
437	Rezoning (Lot 9-16, Block 76)	08/25/2003	ZO
438	Rezoning (Sec. 10-14-t)	08/25/2003	ZO
439	Retirement System	03/24/2003	NC
440	Retirement System	09/22/2003	NC
441	Youth Tobacco Act	10/27/2003	10-518
442	Emergency Medical Services	10/27/2003	NC
443	Building Code	12/22/2003	5-201, 5-202
444	Existing Building Code	12/22/2003	5-204
445	Residential Code	12/22/2003	5-207, 5-208
446	Plumbing Code	12/22/2003	5-301, 5-302
447	Mechanical Code	12/22/2003	5-501, 5-502
448	Fire Code	12/22/2003	5-601, 5-603
449	Private Sewage Disposal Code	12/22/2003	5-306, 5-307
450	Fuel Gas Code	12/22/2003	5-610, 5-611
451	Rezoning (Sec. 35-14-5)	01/12/2004	ZO
452	Water Lines and Fire Hydrants	04/26/2004	Sub. Regs.
453	Five Acre Lots	05/24/2004	Sub. Regs.
454	Off-Street Parking	04/26/2004	NC (amended by 455)
455	Off-Street Parking	05/10/2004	ZO 5-3(7)
456	Penalty Assessments	06/28/2004	6-132
457	Municipal Court Costs	08/30/2004	6-127
458	Rezoning (Lots 3-12, 19-20, Block 33)		Denied
459	Municipal Court Suspension/Deferment	09/27/2004	6-126, 1-108
460	Rezoning (Sec. 10-14-5)	10/08/2004	ZO
461	Condemnation	01/24/2005	8-303
462	Communication Towers	02/28/2005	Chapter 5A
463	Private Streets/Roads	04/25/2005	Sub.Regs. (VI-5.1 & VI-5.2)
464	Rezoning (Lots 21-24, Block 68, Lots 13-16, Block 69, and Lots 13-24, Block 70)		Denied
465	Rezoning (Lot 5, Block 1)		Denied
466	Street Improvements		Denied
467	Rezoning (Sec. 34-14-5)	08/22/2005	
468	Oil & Gas Drilling/Operations (Fences)	07/25/2005	12-515
469	Not used		
470	Rezoning (Sec. 33-14-5)	06/27/2005	ZO
471	Lot-split Plat	08/22/2005	Sub.Regs. (III-5)
472	Planned Unit Development	11/28/2005	ZO (5-10(6))

DISPOSITION TABLE 11/2006--continued

Ord. No.	Subject	Date Adopted	Disposition
473	Rezoning (Sec. 16-14-5)	11/28/2005	ZO
474	Permits and Inspection Fees	12/27/2005	Sub.Regs. (VI-2A)
475	Facades	12/27/2005	ZO (5-3A)
476	Five Acre Lots	11/28/2005	Sub.Regs. (I-4A)
477	Not used		
478	Personal Storage Units	01/23/2006	ZO (Chap. 4 & 5)
479	Rezoning (Sec. 25-14-6)	01/23/2006	ZO
480	New Development Excise Tax		Denied
481	New Development Excise Tax		Denied
482	Infrastructure Fee	08/09/2006	5-231
483	Rezoning (Sec. 32-14-5)	05/22/2006	ZO
484	Rezoning (Sec. 21-14-5)	06/26/2006	ZO
485	Rezoning (Sec. 16-14-5)	05/22/2006	ZO
486	Permits, Inspection Fees, Bonds	05/22/2006	Sub.Regs.(VI-2A, VI-9B)
487	Pending		
488	RS-3 Zoning District	11/27/2006	ZO (Chaps. 2 & 4)
489	Pending		
490	Seatbelts Required	11/27/2006	15-542
491	Ordinance Violations Burea	11/27/2006	6-110
492	Fines, Probation, and Deferral Fees	11/27/2006	1-108, 6-126, 6-301
493	Bond/Security Filing Fee	11/27/2006	6-135

DISPOSITION TABLE

2008 SUPPLEMENT

Ord.No.	Subject	Date Adopted	Disposition
494	Establishing 911 VOIP	12/27/06	Appendix 10
495	Building Regulations and Codes	04/23/07	5-207, 5-208
496	Building Regulations and Codes	04/23/07	5-122
497	Building Regulations and Codes	04/23/07	5-125
498	Not used		
499	Rezoning (NE/4, Sec 33, T14N, R5W)		Denied
500	Animals	09/24/07	4-108
501	Rezoning (Lots 19-24, Blk, and Lots 13-18, Blk 9)	11/26/07	Zoning Ordinance
502	Definition of RE-2	09/24/07	ZO, Chapter 2
503	Rezoning (SW/4, Sec 35, T15N, R6E)		Denied
504	Subdivisions over five acres and street Design standards	11/26/07	Sub Regs, I-4A(B) and V-2(a)(I)
505	Water Lines	11/22/07	Sub Regs, Sec. VI-7
506	Manufactured/Modular/Mobile Homes		Denied
507	Itinerant Vendors - Exceptions	10/22/07	9-210
508	Planned Unit Development	02/25/08	ZO, Sec. 5-10
509	Deed Approval	02/25/08	Sub Regs., Sec III-7
510	Rezoning (N/2, Sec 33, T14N, R5W)	03/06/08	Zoning Ordinance
511	Planned Unit Development	05/27/08	ZO 5-10
512	Not used		
513	Street Improvements	05/27/08	Sub Regs, Sec. VI-5
514	Rezoning (NE/4, Sec 35, T14N, R5W)	04/28/08	Zoning Ordinance
515	Traffic Code	06/23/08	Sec. 15-2001.1
516	Traffic Code	06/23/08	Sec. 15-518.1
517	Rezoning (SW/4, Sec 21, T14N, R5W)	06/05/08	Zoning Ordinance
518	Flood Damage Prevention	05/27/08	Sec. 12-601
519	Restrictions on Gatherings - Minors Consuming Alcoholic Beverages	07/28/08	Chapter 3
520	Maximum Fines, Imprisonment, Probation, and Fee Deferral; Jury Trial Requirements, and Limitations on Files	08/25/08	Sec. 1-108, Sec. 6-126, and Sec. 6-301
521	Rezoning SW/4, Sec. 21, T14N, R5W		Zoning Ordinance
522	Transfer of Property to Eastwind Estates		Appendix 10
523	Water Main Extension, Sanitary Sewer Extension, and Payback Policy		Part 17, Article C

(This page intentionally left blank)

ORDINANCE DISPOSITION TABLE

2010 SUPPLEMENT

Ord.No.	Subject	Date Adopted	Disposition
524	Identity Theft Prevention Program	11/24/2008	Ch 9, Title 7
525	Void		
526	Void		
527	Special Flood Hazards	06/02/2009	12-605
528	Retirement		Not codified
529	National Electric Code	06/22/2009	5-401
530	American National Standards Accessible And Usable Buildings and Facilities Code	06/22/2009	5-210
531	International Plumbing Code	06/22/2009	5-301 & 5-302
532	International Building Code	06/22/2009	5-201 & 5-202
533	International Existing Building Code	06/22/2009	5-204
534	International Fire Code	06/22/2009	5-601 & 5-602
535	International Fuel Gas Code	06/22/2009	5-610 & 5-611
536	International Mechanical Code	06/22/2009	5-501 & 5-502
537	International Private Sewage Disposal Code	06/22/2009	5-306
538	International Property Maintenance Code	06/22/2009	5-209
539	Ordinance Violations Bureau	05/28-2009	6-110
540	Sewers and Sewage Disposal		Chapter 17A
541	Court Costs	07/27/2009	6-127
542	Required Building Permits, Fees, Insurance	7/27/2009	5-127
543	Permit and Inspection Fees	7/27/2009	5-128
544	Void		
545	Restrictions on Gatherings--Minors Consuming Alcohol	7/27/2009	3-301
546	Maximum Fines and Imprisonment	7/27/2009	1-108, 6-126, 6-301
547	Amendments, Validity, Enactment		ZO 9-1
548	Sales Tax Code	8/24/2009	7-305 & 7-306
549	Noise Control	10/26/2009	8-701
550	Operation of Minibikes, Golf Carts, ATVs, And Utility Vehicles on Public Streets	11/23/2009	15-1510
551	Retirement		Not codified
552	Retirement		Not codified
553	Excise Tax		7-403
554	Denied		
555	Rezone NW/4, Sec 4, T13N, R5W	4/16/2010	Zoning Ordinance
556	Building Permits, Site Plans, Submittals and Application Requirements	05/23/2010	7-2 & 7-2.1 ZO
557	Special Permit Uses	06/28/2010	7-4.1 ZO

558	Storage and Parking of Commercial Vehicles, Trailers and Boats	10/25/2010	Part 8, Ch 6
559	Special Flood Hazards and Flood Plain Management	06/28/2010	12-601
560	Secs 4 & 5, T14N, R5W	07/26/2010	Zoning Ordinance
561	Facades on Commercial Buildings		Zoning Ordinance
562	Rezone NW/4 & NE/4, Sec 33, T14N, R5W	08/23/2010	Zoning Ordinance
563	Earth Change and Storm Water Drainage		Part 18
564	Impoundment		15-1901
	Proof of Liability Insurance Coverage		15-103
565	Combination Fire Department		13-102

ORDINANCE DISPOSITION TABLE

2013 SUPPLIMENT

Ord. No.	Subject	Date Adopted	Disposition
567	Truancy	01/24/2011	Adding Section 10-520 through 10-522
568	Alarm Systems	03/28/2011	Adding Chapter 3 to Part 9 Section 9-301 through 9-307
569	Electricity Franchise	04/25/2011	Appendix 10
570	Travel Trailer as Temporary Housing	06/02/2011	Renumbering Section 5-703 to 5-704, Adding Section 5-703
571	Waiver of Infrastructure Use	07/14/2011	Amending Section 5-232 by adding Subsection "C" (misnumbered 2-232 in ordinance)
572	Building Permit for an Accessory Building after Disaster.	07/14/2011	Adding Section 5-129
573	Adopting International Building Code, 2009	10/27/2011	Amending Section 5-201, Repealing Section 5-204
574	Open Burning Prohibited	11/26/2011	Amending Section 8-113
575	Sidewalks and Subdivisions	08/27/2012	Adding Section V-2-g to "Subdivision Regulations" Adding Chapter 5 to Part 14 Section 14-501 through 14-521
576	Zoning Change	01/23/2012	Not Codified
577	USDA-RBEG-Revolving Loan Fund	02/27/2012	Appendix 10
578	Zoning Change	04/23/2012	Not Codified
579	Sewer User Charges	05/31/2012	Amending Section 17A-501
581	Regulation of Mini Wind Energy Conversion Systems	12/17/2012	Amending Section 5-801 through 5-803 Adding Section 5-804 through 5-819

582	Bond Election	01/28/2013	Not Codified
583	Retirement System	05/28/2013	Appendix 10
584	Retirement System	05/28/2013	Appendix 10
586	Zoning Change	06/24/2013	Not Codified
590	Zoning Change	08/26/2013	Not Codified
591	Declaration of Wind Energy System to be Public Nuisance	08/26/2013	Amending Section 5-801 through 5-819 Adding Section 5-820
592	City Personnel Regulations	09/16/2013	Amending Section 2-403, 2-407, 2-408, 2-410, 2-411, 2-412
593	Voting Ward Boundaries	10/30/2013	Amending Section 1-302
594	Regulation of Wind Energy Systems	12/09/2012	Amending Section 5-801, 5-802 Repels Section 5-820